TI 6490.13

NSN 0056-00-471-0000

INSTRUCTION BOOK

P300
LINE PRINTER

PART OF

FLIGHT SERVICE AUTOMATION SYSTEM

VOLUME I

CONTROLLED
DOCUMENT

CONTRACT DTFA01-81-C-10039

CONTRACTOR

E-SYSTEMS, INC.
GARLAND DIVISION
P.O. BOX 660023
DALLAS, TEXAS 75266-0023

416-21619

1 OCTOBER 1984

MADE FOR

U.S. DEPARTMENT OF TRANSPORTATION
FEDERAL AVIATION ADMINISTRATION

FAA Contract DTFA01-81-C-10039
Contractor: E-Systems, Inc., Garland Division
Subcontractor: Printronix

Rights in Technical Data and Computer Software-Printronix drawings and manuals are provided for maintenance purposes only and there is no conveyance of manufacturing rights.

Reproduction rights for all manuals and drawings is hereby granted provided that duplicates of original material marked as confidential or proprietary to Printronix also be so marked.

This legend applies to all technical data contained in this manual and shall be included with and affixed to any reproduction hereof which includes any part(s) or portion(s) of the technical data.

RECORD OF CHANGES

CHANGE TO BASIC	SUPPLEMENTS			OPTIONAL USE	CHANGE TO BASIC	SUPPLEMENTS			OPTIONAL USE

P300

MAINTENANCE

MANUAL

DOCUMENT NO. 101691-001 REV C

PRINTRONIX

17500 CARTWRIGHT ROAD P.O. BOX 19559
IRVINE, CA 92713
TELEPHONE (714)863-1900 TWX (910)595-2535
COPYRIGHT © 1984, PRINTRONIX, INC.

All information contained in this manual is disclosed for normal use and may not be duplicated in part or full without prior written approval of Printronix, Inc.
The purpose of this manual is to provide the user with sufficient information to efficiently maintain the equipment supplied. Use of this document for any other purpose is prohibited.

The enclosed documents are provided as a source of information. The illustrations do not necessarily reflect the latest changes/corrections and/or additions to the P300.

TABLE OF CONTENTS

SECTION		PAGE
1.0	P300 GENERAL DESCRIPTION	1
1.1	General Description	1
1.2	Maintenance Specifications	2
1.3	Operator Controls and Indicators	5
2.0	THEORY OF OPERATION	6
2.1	General	6
2.2	Load Buffer State	8
2.3	Interface	10
2.4	Print Buffer	14
2.5	Print State	16
2.6	Character Generation	17
2.7	Character Generation Logic	19
2.8	Dot Row Counter Logic	23
2.9	Plot Mode Operation	24
2.10	Hammer Driver Circuits	26
2.11	Print Synchronization	28
2.12	Print Mechanism	31
2.13	Paper Feed State	37
2.14	Paper Feed To The Next Dot Row	38
2.15	Paper Feed To The Next Character Line	38
2.16	Skip Over Perforation	43
2.17	Paper Feed To The Top-of-Form	43
2.18	Electronic Vertical Format Unit	46
2.19	Programming The EVFU Memory	47
2.20	Channel Seek Operation	49
2.21	Vertical Tab Operation	51
2.22	Binary Count Operation	51
2.23	Runaway Paper Fault Protection	53
2.24	Paper Transport	53
2.25	Paper Out Switch Logic	55
2.26	Paper Motion Detection Logic	55
2.27	Paper Feed Control Circuits	57
2.28	Ribbon Transport	58
2.29	Power Supply Assembly	60

TABLE OF CONTENTS

SECTION		PAGE
3.0	PREVENTIVE AND CORRECTIVE MAINTENANCE	62
3.1	General	62
3.2	Preventive Maintenance	65
3.3	Corrective Maintenance	66
3.4	Printer Cabinet	66
3.5	Printer Cover	68
3.6	Control Panel	70
3.7	Control Panel Switches	71
3.8	Indicator Lamps	71
3.9	Ribbon Drive Assembly	72
3.10	Ribbon Control PCBA	74
3.11	Ribbon Hubs and Guides	76
3.12	Ribbon Drive Motors	77
3.13	Ribbon Drive Assembly Blower	78
3.14	Printing Mechanism	78
3.15	Shuttle Assembly	79
3.16	Rotating the Hammerbank to the Service Position	82
3.17	Adjusting Platen to Hammer Tip Spacing	85
3.18	Shuttle Spring Force Adjustment	88
3.19	Hammer Springs	90
3.20	Hammer Coils	95
3.21	Paper Ironer	97
3.22	Counterweight Assembly	99
3.23	Flywheel Assembly	102
3.24	Cam Wick	105
3.25	Magnetic Pickup Assembly	105
3.26	Shuttle Motor	109
3.27	Shuttle Motor Pulley	111
3.28	Adapting the Printer for Line Frequency	111
3.29	Shuttle Belt	112
3.30	Paper Feed Mechanism	113
3.31	Paper Feed Belt	113
3.32	Paper Feed Motor	115
3.33	Paper Tractors	117
3.34	Paper Motion Sensor Assembly	120
3.35	Paper Out Detectors	123
3.36	Platen Open Switch	127
3.37	Power Supply Assembly	127
3.38	Replacing the DC Supply Fuses	128
3.39	Replacing the Power Supply PCBA	130
3.40	Replacing the Power Supply Assembly	130
3.41	Rear Cooling Fan	131
3.42	Card Cage PCBAs	131

TABLE OF CONTENTS

SECTION		PAGE
4.0	TROUBLESHOOTING PROCEDURES	
4.1	General	133
4.2	Troubleshooting Aids	133
4.3	CATEGORY 1: Failures Indicated At The Control Panel	135
4.4	CATEGORY 2: Shuttle Does Not Time Out	139
4.5	CATEGORY 3: Ribbon Does Not Feed Properly	142
4.6	CATEGORY 4: Interface Problems Between the Printer and the Host Computer	144
4.7	CATEGORY 5: Improper Printer Operation	146
4.8	CATEGORY 6: Paper Feed Mechanism Does Not Feed Properly	157
4.9	Performance Tests	160
4.10	Normal Printing Test (Sliding Pattern)	161
4.11	MPU Phasing Test (All "H's")	162
4.12	Print Uniformity Test (Elongated "E's")	163
4.13	Vertical Hammer Alignment Test (Underline)	164
4.14	General Tests	165
5.0	ILLUSTRATED PARTS BREAKDOWN	
5.1	General	168
5.2	P300 Printer Mechanics Assembly P/N 104007	169
5.3	P300 Printer Mechanics Assembly P/N 105554	180
5.4	P300 Shuttle Assembly Without Hammer Springs P/N 105045 P300 Shuttle Assembly Steel Hammer Springs P/N 105058-001 P300 Shuttle Assembly Carbide Hammer Springs P/N 105047-001	191
5.5	P300 Power Supply P/N 104056	193
5.6	P300 Ribbon Deck Drive Assembly P/N 105035	196
5.7	P300 Ribbon Deck Drive Sub-Assembly P/N 105530	198
5.8	P300 Ribbon Deck Drive Assembly P/N 105377	200
5.9	P300 Ribbon Deck Drive Sub-Assembly P/N 105516	202

TABLE OF CONTENTS

SECTION		PAGE
6.0	DRAWINGS	
6.1	General	204
6.2	Control Panel Assembly P/N 101578	205
	Control Panel Schematic P/N 101766	207
6.3	Hammer Driver PCBA P/N 101200	208
	Hammer Driver Schematic P/N 101203	210
6.4	Ribbon Control PCBA P/N 102140	211
	Ribbon Control Schematic P/N 102143	214
6.5	Power Supply PCBA P/N 105018	215
	Power Supply Schematic P/N 105022	219
	Power Supply Schematic P/N 105430	221
6.6	Logic A1 PCBA P/N 101685	223
	Logic A1 Schematic P/N 101688	226
6.7	Logic A4 PCBA P/N 103831	230
	Logic A4 Schematic P/N 104044	233
6.8	Logic A6 PCBA P/N 106599	238
	Logic A6 Schematic P/N 106598	241
6.9	Logic A7 PCBA P/N 107329	247
	Logic A7 Schematic P/N 107330	250
6.10	Logic B4 PCBA P/N 102360	258
	Logic B4 Schematic P/N 102363	261
6.11	Logic B7 PCBA P/N 103830	265
	Logic B7 Schematic P/N 104118	268
6.12	Logic B9 PCBA P/N 106594	274
	Logic B9 Schematic P/N 106596	277
6.13	Logic B10 PCBA P/N 107348	285
	Logic B10 Schematic P/N 107349	288
7.0	MNEMONICS	
7.1	Mnemonics Dictionary Hammer Driver PCBA	297
7.2	Mnemonics Dictionary Logic A PCBA	298
7.3	Mnemonics Dictionary Logic B PCBA	301
8.0	OPTION (RS232)	
8.1	RS232 PCBA P/N 104374	305
	RS232 Schematic P/N 104379	310

LIST OF FIGURES

FIGURES		PAGE
2-1	Printer Functional Elements	7
2-2	Load Buffer State Functional Block Diagram	9
2-3	Interface Functional Block Diagram	12
2-4	Centronics Interface Timing	13
2-5	Dataproducts Interface Timing	13
2-6	Dot Selection Block Diagram	15
2-7	Dot Matrix Specifications	18
2-8	Typical Characters (Data Processing Mode)	18
2-9	Elongated Character With and Without Descenders	19
2-10	Dot Column and Character Column Counter Block Diagram	21
2-11	Dot Column and Character Column Timing for One Shuttle Cycle	22
2-12	Plotting the Six Bit Code	25
2-13	Hammer Driver Functional Block Diagram	27
2-14	Hammer Driver Circuits Timing	28
2-15	Dot Row Timing vs Timing Disk and Cam Position	29
2-16	Operation of MPU Circuit	31
2-17	Hammer and Shuttle Arrangement, Cross Section	32
2-18	Print Hammer Action	33
2-19	Standard Character Formation	34
2-20	Character Formation by One Hammer	35
2-21	Hammerbank/Shuttle Components	36
2-22	Paper Feed Logic Block Diagram	39
2-23	Line Feed Operation Velocity Profile	40
2-24	Timing Sequence for Printing One Character Line	42
2-25	Top-of-Form Counter Functional Block Diagram	44
2-26	Top-of-Form Slewing Velocity Profile	45
2-27	Paper Feed to Top-of-Form Timing	46
2-28	EVFU Loading Functional Block Daigram	48
2-29	EVFU Loading Sequence Timing Diagram	48
2-30	EVFU Channel Seek Functional Block Diagram	50
2-31	EVFU Channel Seek Velocity Profile	51
2-32	EVFU in Binary Count Mode	52
2-33	Paper Transport Components	54
2-34	Paper Motion Detector Functional Diagram	56
2-35	Paper Feed Control Circuits Block Diagram	57

LIST OF FIGURES

FIGURES		PAGE
2-36	Ribbon Drive Assembly Functional Block Diagram	59
2-37	Ribbon Control PCBA Simplified Schematic Diagram	59
3-1	The P300 Printer	63
3-2	Printer Cabinet and Control Panel	67
3-3	Removing the Cabinet and PCBAs	69
3-4	The Ribbon Drive Assembly	74
3-5	Details of the Ribbon Drive Assembly	75
3-6	The Shuttle Assembly	80
3-7	Hammerbank in Service Position with Cover Assembly Removed	83
3-8	Shuttle Assembly Service Details	86
3-9	Flywheel Assembly and the Counterweight Assembly	89
3-10	Hammer Spring Servicing	91
3-11	Tweaking the Hammer Spring Externally	93
3-12	Removing the Hammer Coil Assembly	96
3-13	The Paper Ironer	98
3-14	Counterweight Assembly Details	100
3-15	Wick Assembly	101
3-16	Flywheel Assembly and MPU Assembly Details	103
3-17	Adjusting the MPU Assembly	106
3-18	MPU Waveforms	107
3-19	Dot Column Offset	108
3-20	Removing the Shuttle Motor	110
3-21	Removing the Paper Feed Motor	114
3-22	Adjusting the Paper Feed Belt	116
3-23	Paper Transport Details	118
3-24	Servicing the Paper Tractor	121
3-25	Removing the Paper Out Switch	124
3-26	Adjusting the Paper Out Switch	126
3-27	Power Supply Assembly Details	129
4-1	Printer Functional Elements	134
4-2	Printer Preparation and Operation Checks Flow Chart	136
4-3	Power Indicator Will Not Light	137
4-4	Check Lamp is On	138

LIST OF FIGURES

FIGURES		PAGE
4-5	Printer Will Not Go Online	140
4-6	Shuttle Control Waveform Measurement Points	141
4-7	Ribbon Drive Assembly Circuits Flow Chart	143
4-8	Interface Logic Functional Block Diagram	145
4-9	Logic and Mechanisms for Printing Action Block Diagram	147
4-10	Missing Characters	149
4-11	Examples of Dropout	149
4-12	Example of Dragging Hammer	152
4-13	Print Density Requires Hammer Alignment	152
4-14	Horizontal Hammer Alignment	154
4-15	Vertical Misalignment	154
4-16	Vertically Misformed Characters	155
4-17	Vertical Compression of Print	155
4-18	Paper Feed Logic Flow Chart	158
4-19	Sliding Pattern, All Upper and Lowercase Characters	161
4-20	Letter "H" (Test for MPU Phasing)	162
4-21	Letter "E" Elongated (Test for Print Uniformity)	163
4-22	Underlines (Test for Vertical Hammer Alignment)	164
4-23	Recycle Pattern, Upper and Lowercase Characters	165
4-24	Uppercase Characters Row Increment	166
4-25	Self-Test	167

LIST OF TABLES

TABLES		PAGE
1-1	Maintenance Specifications	2
1-2	Operator Controls and Indicators	5
2-1	Interface Signals	11
3-1	Recommended Tools and Test Equipment	64

INTRODUCTION

The Printronix P300 Maintenance Manual contains detailed information required to maintain and repair the Printronix P300 Printer.

The Maintenance Manual is divided into the following sections:

- **P300 GENERAL DESCRIPTION** — Provides a brief overview of printer operation, maintenance specifications, and available reference documents.
- **THEORY OF OPERATION** — Describes data byte conversion to printed characters or graphics. Each description is given in functional sequence with block diagrams or simplified schematics.
- **PREVENTIVE AND CORRECTIVE MAINTENANCE** — Provides procedures and illustrations for the removal, replacement, adjustment, and cleaning of all printer assemblies. The order in which the procedures are presented suggests the most convenient sequence for assembly removal.
- **TROUBLESHOOTING PROCEDURES** — Describes six categories of operation followed by individual failure symptoms. Corrective actions are presented to restore printer operation.
- **ILLUSTRATED PARTS BREAKDOWN** — Includes the P300 Shuttle Assembly and P300 Printer Mechanics Assembly.
- **DRAWINGS** — Includes the PCBA and schematic drawings for all printer major electronic assemblies including the Control Panel, the Logic A and Logic B boards, the Power Supply Assembly, and the Hammer Driver board.
- **MNEMONICS** — Provides definitions for the abbreviated terms used throughout the manual.

Consult these reference documents for additional information about the P300:

- OPERATOR'S GUIDE – Contains instructions for unpacking, installing, and operating the printer.
- P-SERIES USER'S REFERENCE MANUAL – Describes functions and applications available with the P300.

1

P300 GENERAL DESCRIPTION

CONTENTS

General Description 1.1

Maintenance Specifications 1.2

Operator Controls and Indicators 1.3

TABLES

Maintenance Specifications 1-1

Operator Controls and Indicators 1-2

1.0 P300 GENERAL DESCRIPTION

1.1 GENERAL DESCRIPTION

The Printronix P300 is a matrix line printer that receives text or graphics information from a host computer in digital code and presents it in a hard copy printout on single or multi-part forms.

The P300 printer offers three print applications with four character per line (cpl) and lines per minute (lpm) combinations:

Data Processing - 132 cpl at 300 lpm.
Compressed - 176 or 220 cpl at 300 lpm.
High Speed Draft - 132 cpl at 400 lpm.

Graphic data is plotted at a minimum rate of 16.6 inches per minute.

Plug-in PROMs provide quick and easy changing of the printer character set. In addition to the standard character set PROM, PROMs are available for foreign languages and characters for block printing.

Special program controlled features of the P300 include:

- ◊ Underlined Characters.
- ◊ High Resolution Plot.
- ◊ Double Speed Plot.
- ◊ Electronic Vertical Format Unit (EVFU).
- ◊ Elongated (double height) Characters.
- ◊ Programmable Vertical Tab.
- ◊ Selectable Line Spacing.

The standard parallel interface board provided with the P300 printer is adaptable for either Centronics or Dataproducts compatible host computers.

1.0 P300 GENERAL DESCRIPTION

1.2 MAINTENANCE SPECIFICATIONS

Maintenance specifications for the P300 are shown in Table 1-1.

TABLE 1-1.
MAINTENANCE SPECIFICATIONS

OPERATING PARAMETERS	SPECIFICATION
PRINTER PERFORMANCE	
PRINT SPEED (lines per minute)	
Data Processing (normal)	
Uppercase characters	300
Double height characters	170
Underline or lowercase descenders	240
Compressed	
Uppercase characters	300
Double height characters	170
Underline or lowercase descenders	240
Draft	
Uppercase characters	400
Double height characters	240
Underline only	300
CHARACTER MATRIX	Horizontal / Vertical
Uppercase	5 dots on 9 centers / 7 dots
Lowercase with descenders	5 dots on 9 centers / 9 dots
Optional full width sets	6 dots on 12 centers / 9 dots
HORIZONTAL LINE FORMAT	
Normal, elongated, and draft characters	Up to 132 characters per line (10 characters per inch)
Compressed characters	220 characters per line (16.7 characters per inch)
Alternate Compressed	176 characters per line (13.2 characters per
LINE SPACING (lines per inch)	
Standard	6 and 8 lpi
Configurable	6 and 8 lpi 6 and 9 lpi 6 and 10 lpi 8 lpi only 9 lpi only 10 lpi only

1.0 P300 GENERAL DESCRIPTION

1.2 MAINTENANCE SPECIFICATIONS (Continued)

TABLE 1-1.
MAINTENANCE SPECIFICATIONS

OPERATING PARAMETERS	SPECIFICATION
PRINTER PERFORMANCE	
CHARACTER SET	
Data processing (standard)	96 ASCII characters
Compressed (optional)	96 ASCII characters
Draft (optional)	64 ASCII characters (uppercase only)
Extended (optional)	192 characters maximum
Character Registration	0.005 inch horizontal and vertical
Plot Resolution (dots per inch)	
Normal Resolution	60 horizontal, 72 vertical
High Resolution	120 horizontal, 72 vertical
Normal Plot Rate (inches per minute)	16.6 ipm (20 dot rows per second)
Standard Features	Compressed character print Graphics plotting Underline print Electronic vertical formatting Built in test pattern printing Elongated character print
INTERFACE	
TYPE	8-Bit parallel
LOGIC LEVELS	TTL
DATA FORMAT	ASCII
COMPATIBILITY	Centronics or Dataproducts
BUFFER SIZE	1 line (up to 132 characters) 220 with Compressed (optional)
MAXIMUM DATA INPUT RATE (characters per second)	
Dataproducts	500,000 cps
Centronics	200,000 cps

1.0 P300 GENERAL DESCRIPTION

1.2 MAINTENANCE SPECIFICATIONS (Continued)

TABLE 1-1.
MAINTENANCE SPECIFICATIONS

OPERATING PARAMETERS	SPECIFICATION	
ELECTRICAL		
INPUT POWER	North American	International
Voltage	*120 ± 10% Vac	**240 ± 10% Vac
Phase Frequency	60 ± 3% Hz	50 ± 3% Hz
Power Consumption Nominal Standby Nominal Operating Motor Start-up Current	 370 VA 810 VA 14 A	 370 VA 810 VA 7 A

* A field changeable strap is provided to select input power of either 100 Vac or 220 Vac.

** A field changeable strap is provided to select input power of either 200 Vac or 220 Vac.

1.0 P300 GENERAL DESCRIPTION

1.3 OPERATOR CONTROLS AND INDICATORS

A tabular listing of operator controls and indicators is provided in Table 1-2.

TABLE 1-2.
OPERATOR CONTROLS AND INDICATORS

EXTERNAL CONTROLS	Power On/Off Check Reset 8 LPI PAPER ADVANCE TOP OF FORM ON LINE
EXTERNAL INDICATORS	POWER INDICATOR CHECK (Lights to indicate fault condition) 8 LPI PAPER ADVANCE TOP OF FORM (Lights to indicate EVFU Loaded/ Forms Length Active) ON LINE
INTERNAL CONTROLS	Forms Thickness Adjustment Horizontal Vernier Control Top-of-Form Adjustment Paper Width Adjustment

THEORY OF OPERATION

2

CONTENTS

General	2.1
Load Buffer State	2.2
Interface	2.3
Print Buffer	2.4
Print State	2.5
Character Generation	2.6
Character General Logic	2.7
Dot Row Counter Logic	2.8
Plot Mode Operation	2.9
Hammer Driver Circuits	2 10
Print Synchronization	2.11
Print Mechanism	2.12
Paper Feed State	2.13
Paper Feed to the Next Dot Row	2.14
Paper Feed to the Next Character Line	2.15
Skip Over Perforation	2.16
Paper Feed to the Top-of-Form	2.17
Electronic Vertical Format Unit	2.18
Programming the EVFU Memory	2.19
Channel Seek Operation	2.20
Vertical Tab Operation	2.21
Binary Count Operation	2.22
Runaway Paper Fault Protection	2.23
Paper Transport	2.24
Paper Out Switch Logic	2.25
Paper Motion Detection Logic	2.26
Paper Feed Control Circuits	2.27
Ribbon Transport	2.28
Power Supply Assembly	2.29

FIGURES

Printer Functional Elements	2-1
Load Buffer State Functional Block Diagram	2-2
Interface Logic Functional Block Diagram	2-3
Centronics Interface Timing	2-4
Dataproducts Interface Timing	2-5
Dot Selection Block Diagram	2-6
Dot Matrix Specifications	2-7

THEORY OF OPERATION

2

FIGURES

Typical Characters (Data Processing Mode) 2-8
Elongated Character With and Without Descenders 2-9
Dot Column and Character Column Counter Block Diagram 2-10
Dot Column and Character Column Timing for One Shuttle Cycle 2-11
Plotting the Six Bit Code 2-12
Hammer Driver Functional Block Diagram 2-13
Hammer Driver Circuits Timing 2-14
Dot Row Timing vs Timing Disk and Cam Position 2-15
Operation of the MPU Circuit 2-16
Hammer and Shuttle Arrangement, Cross Section 2-17
Print Hammer Action 2-18
Standard Character Formation 2-19
Character Formation by One Hammer 2-20
Hammerbank/Shuttle Components 2-21
Paper Feed Logic Block Diagram 2-22
Line Feed Operation Velocity Profile 2-23
Timing Sequence for Printing One Character Line 2-24
Top-of-Form Counter Functional Block Diagram 2-25
Top-of-Form Slewing Velocity Profile 2-26
Paper Feed to Top-of-Form 2-27
EVFU Loading Functional Block Diagram 2-28
EVFU Loading Sequence Timing Diagram 2-29
EVFU Channel Seek Functional Block Diagram 2-30
EVFU Channel Seek Velocity Profile 2-31
EVFU in Binary Count Mode 2-32
Paper Transport Components 2-33
Paper Motion Detector Functional Diagram 2-34
Paper Feed Control Circuits Block Diagram 2-35
Ribbon Drive Assembly Functional Block Diagram 2-36
Ribbon Control PCBA Simplified Schematic Diagram 2-37

TABLE

Interface Signals 2-1

2.0 THEORY OF OPERATION

2.1 GENERAL

Section Two presents the theory of operation for the Printronix P300 printer. Functional block diagrams and illustrations are included to help the technician perform field maintenance. Refer to Section Six for detailed schematic diagrams, and Section Seven for mnemonic definitions.

Printer operation is explained for each of the three principal states of operation:

- ◊ LOAD BUFFER STATE – A line of printable data is received from the host computer and stored in the print buffer.
- ◊ PRINT STATE – The complete line of data is printed. As the line is being printed, paper is advanced one dot row at a time within the character line.
- ◊ PAPER FEED STATE – The paper is advanced to the top of the next character line after printing is completed, or it is slewed several lines under the direction of either the EVFU or Top-of-Form.

The three states of operation correlated with the functional elements shown in Figure 2-1.

These elements are:

Interface
Logic A PCBA
Hammer Driver PCBA
Printer Mechanics
Logic B PCBA
Control Panel
Power Supply Assembly

2.0 THEORY OF OPERATION

2.1 GENERAL (Continued)

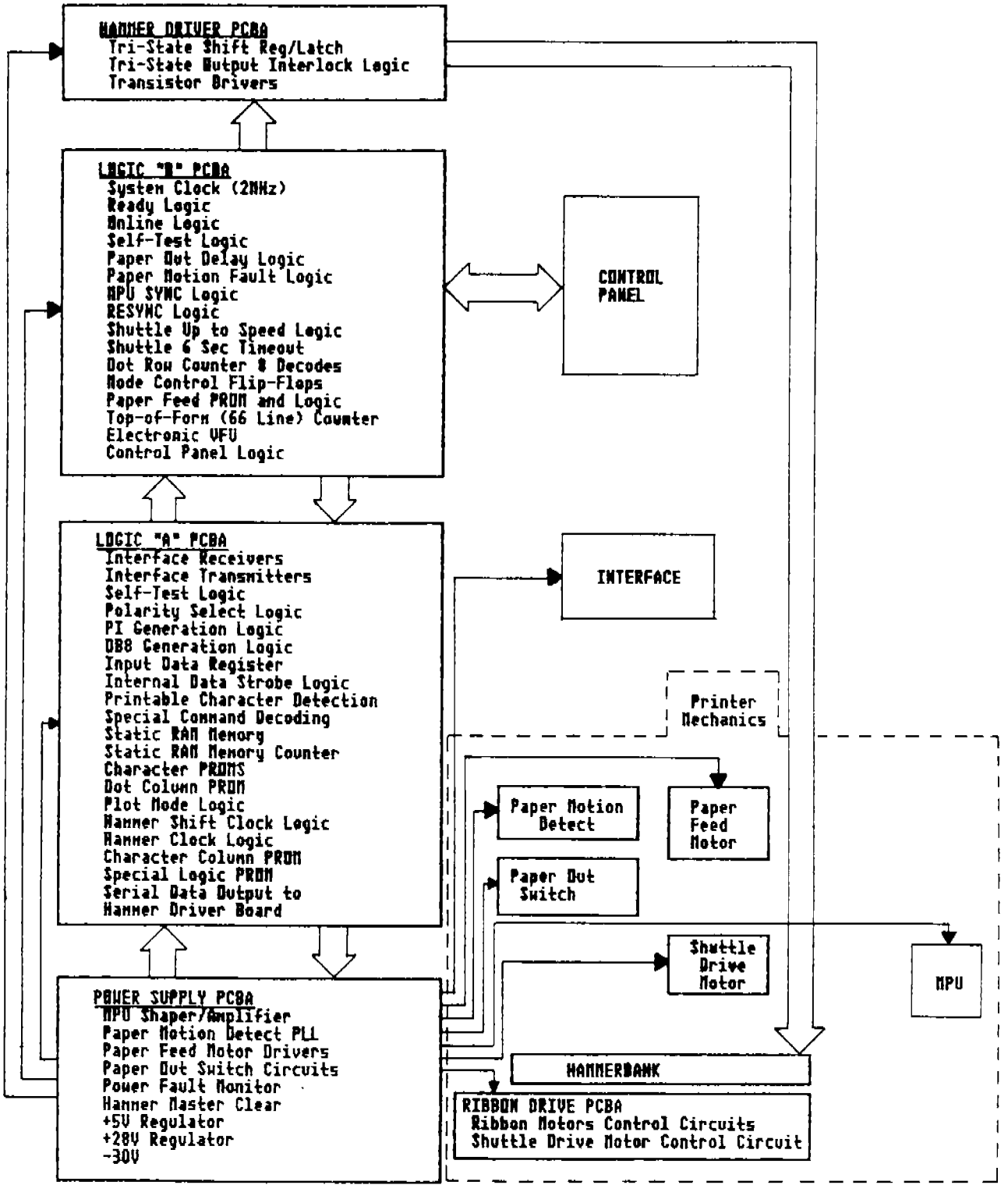

FIGURE 2-1.
PRINTER FUNCTIONAL ELEMENTS

2.0 THEORY OF OPERATION

2.2 LOAD BUFFER STATE

Transfer of data from the host computer to the print buffer occurs during the first or Load Buffer State. In this state, each printable character, space, or underline appearing at the interface latches is loaded into the print buffer. The Load Buffer State continues until terminated by either of the following:

> An entire line of characters has been loaded, followed by a line feed. The Print State is entered.
>
> No characters have been loaded but a paper motion function code has been received. The Paper Feed State is entered.

The block diagram of the interface, latches, and buffers that function on the Logic A PCBA during the Load Buffer State is shown in Figure 2-2. Data bytes made up of 8 parallel bits (IDB1 through IDB8) are sent by the host computer to the Logic A PCBA via of the interface. They are strobed into the data latches and are decoded as either printable characters or commands.

Printable character bytes are stored in the print buffer and are later used to address the character generation PROMs during Print State character printing. Command bytes are further processed in the special character decode circuits to generate the individual commands they represent. Strobe timing circuits control data transfer and command generation which are stimulated by the incoming strobe (ICSTB or IDSTB).

2.0 THEORY OF OPERATION

2.3 LOAD BUFFER STATE (Continued)

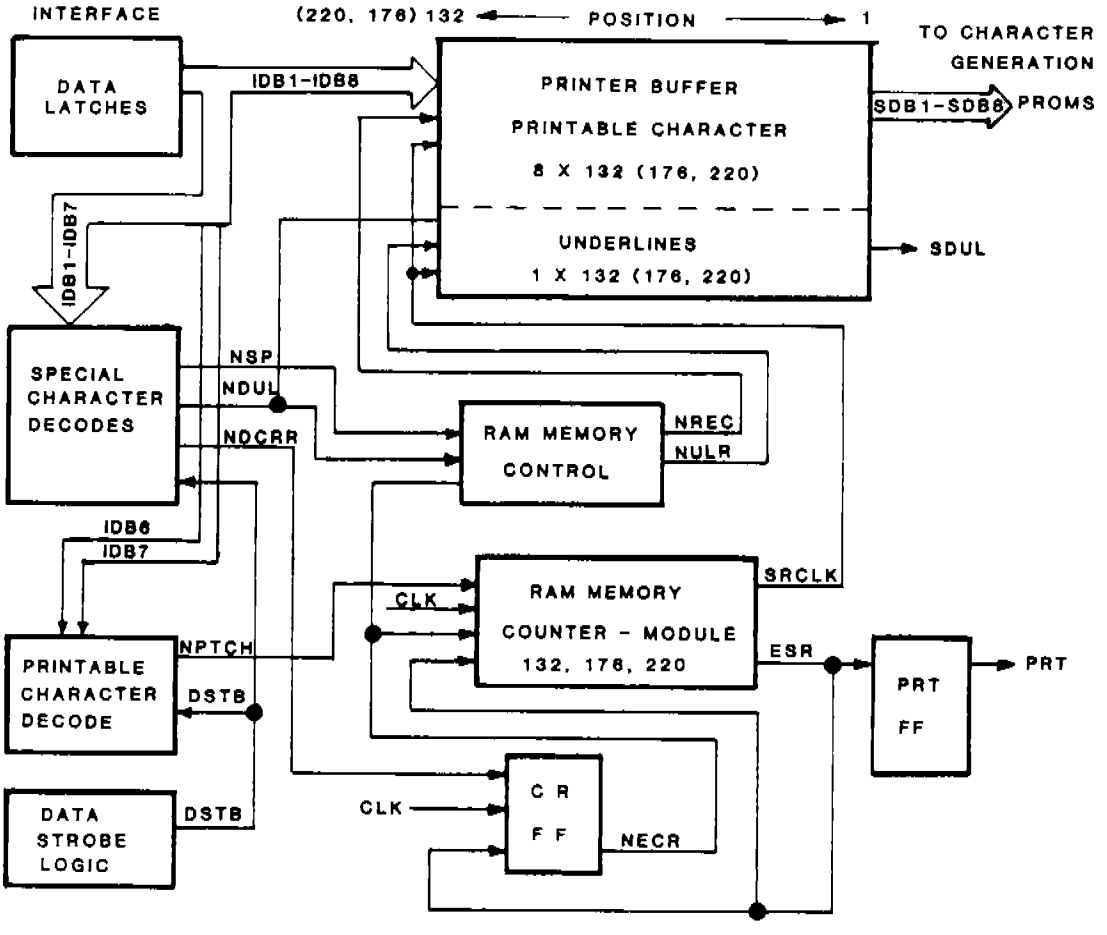

FIGURE 2-2.
LOAD BUFFER STATE FUNCTIONAL BLOCK DIAGRAM

2.0 THEORY OF OPERATION

2.3 INTERFACE

The interface signals are summarized in Table 2-1.

The block diagram of the Logic A PCBA interface is shown in Figure 2-3. The interface is both Centronics and Dataproducts compatible. Their interface timing diagrams are shown in Figures 2-4 and 2-5. Each data byte arrives at the receivers and passes through polarity logic to the buffers. The byte is strobed into the data latches by ICSTB (Centronics) or IDSTB (Dataproducts).

- IPI (Paper Instruction) may also be transferred from the host computer on a Dataproducts interface. It is used to enable the Logic B PCBA EVFU circuits. If IPI is not used, jumper W5 must be installed.

The printer transmits status information to the host computer via the interface:

- IRDY (Dataproducts) and ICPE (Centronics) are Ready signals that inform the host computer that no detected faults are within the printer. ICPE is derived from NRDY for use on the Centronics interface.

- IONL (Online) is active if the ON LINE switch is pressed when the printer is in the Ready state. Online informs the host computer that communication is possible with the printer.

- IDR (Data Request) informs the host computer that the printer is ready to receive a data byte. The host computer responds by placing data onto the data lines, followed by a data strobe to latch the data into the printer. IDR is used by a Dataproducts interface and is active for the following set of conditions:

  a. The printer is online and in the Load Buffer State.

  b. The print buffer is not full.

  c. The data latches are cleared of the previous byte.

- IACK (Acknowledge) requests the next byte from the host computer after the previous byte has been strobed into the data latches. IACK is used by a Centronics interface and is active for the following set of conditions:

  a. The printer is online and in the Load Buffer State.

  b. The print buffer is not full.

2.0 THEORY OF OPERATION

2.3 INTERFACE (Continued)

TABLE 2-1.
INTERFACE SIGNALS

SIGNAL	DESCRIPTION
<u>Received from Host Computer</u>	
IDB1 - IDB8	Seven-bit character or control code, with bit 8 used to select optional character set (performing the same function as the Shift Out code SOV). If bit 8 is not to be used, jumper W4 must be present to disable the bit. Bits 1 through 7 pass through receivers and polarity logic to latches for storage until transfer to the printer buffer.
IPI	Paper Instruction. Asserted by a Dataproducts-compatible host computer when the code on the data lines controls the EVFU and is not to be loaded into the printer buffer. PI is applied through polarity logic and stored in a latch along with the code on the data lines. If PI is not to be used, jumper W5 must be installed to disable the line.
ICSTB	Data strobe generated by Centronics-compatible host computer. ICSTB is received and applied to strobe timing logic and to latch circuits which are loaded by the leading edge of the pulse.
IDSTB	Data strobe generated by Dataproducts-compatible host computer. IDSTB is received and applied through polarity logic to strobe timing circuits, and to latch circuits which are loaded by the leading edge of the pulse. Data, function codes, and the PI bit are loaded by DSTB.
<u>Sent to the Host Computer</u>	
IDR	Data Request signal sent to Dataproducts-compatible host computer when IONL is true, printer is in Load Buffer mode, and input latches have been cleared and are ready to accept the next character.
IONL	Online signal set when operator presses ON LINE pushbutton to make printer able to accept data. Sent through polarity logic and a driver circuit.
IRDY	Ready (RDY) signal sent when online has not been set but printer is otherwise ready to receive data. RDY is sent through polarity logic and a driver circuit to the IRDY line. RDY also appears on the ICPE line (bypassing polarity logic) for use by a Centronics-compatible host computer.
ICPE	"Not Ready" signal conditioned for a Centronics-compatible host computer.
ICBY	Busy. Indicates to the host computer that the printer buffer is not available to receive data.
IACK	Acknowledge. Sent to a Centronics-compatible host computer, through a driver circuit, to request the next character. Set when ICBY is negated or when ON LINE switch is pressed.

2.0 THEORY OF OPERATION

2.3 INTERFACE (Continued)

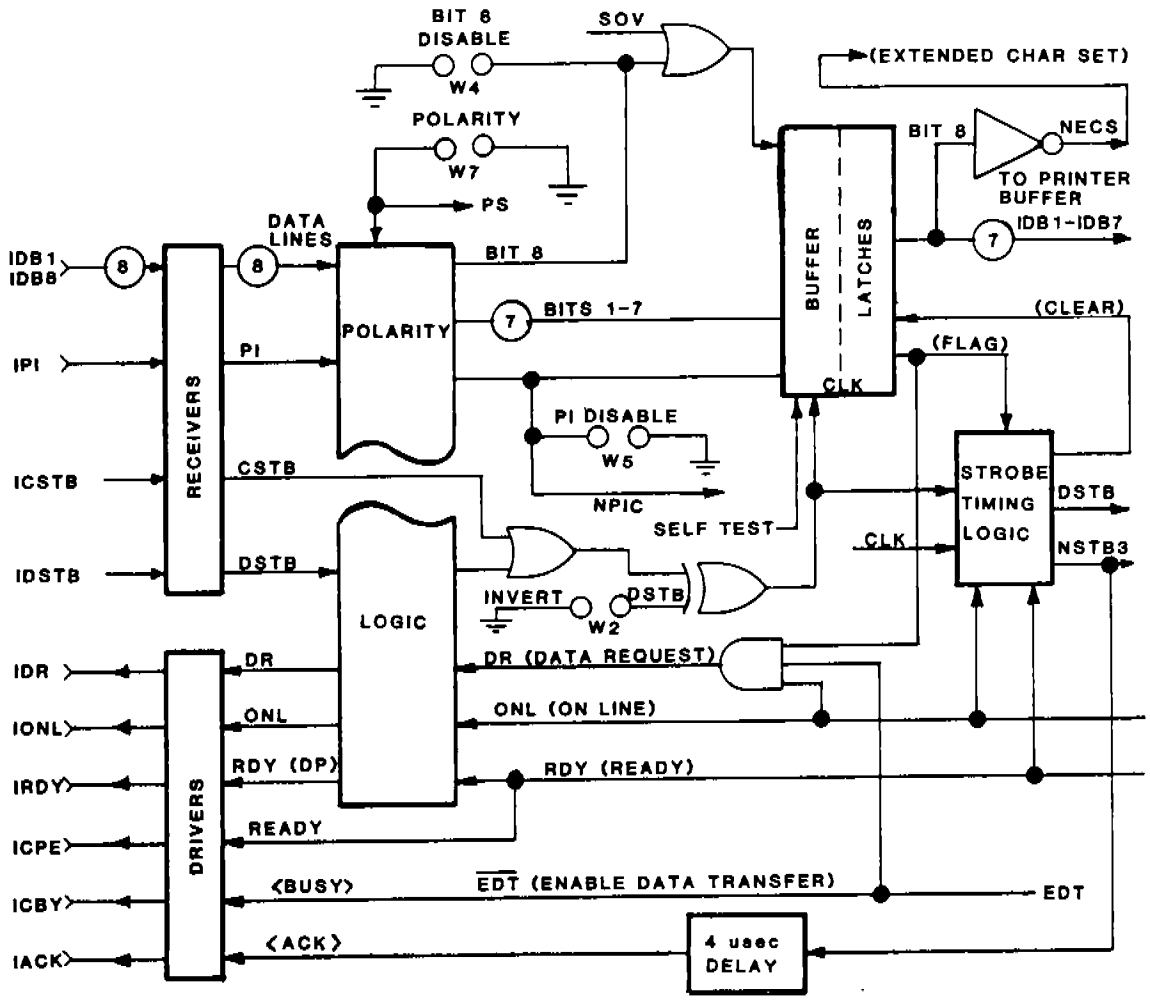

FIGURE 2-3.
INTERFACE FUNCTIONAL BLOCK DIAGRAM

2.0 THEORY OF OPERATION

2.3 INTERFACE (Continued)

◊ ICBY (Busy) indicates to the host computer that the print buffer is not available to receive data because either the print buffer is full or the printer has reached the end of the Load Buffer State.

Polarity logic is available to invert most interface signals from high active to low active. Jumper W7 must be installed for the inversion to take place.

The latch buffers will pass the incoming data through to the data latches except when Self-Test is run. The ASCII HEX code for the character "E" (45H) is hardwired onto the alternate set of buffer inputs and is selected whenever Self-Test is run. The result is that each character line during Self-Test is made up of 132 E's in data processing mode (176 or 220 in compressed).

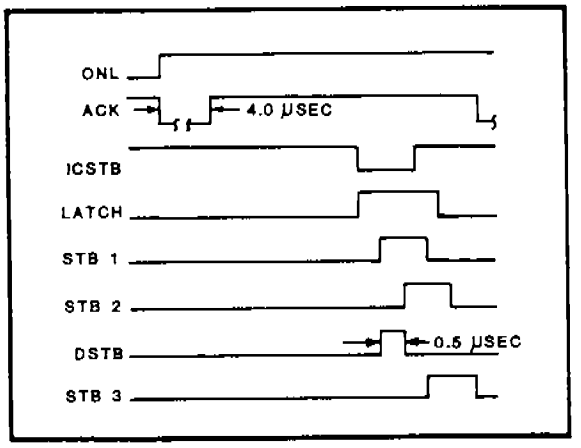

FIGURE 2-4.
CENTRONICS INTERFACE TIMING

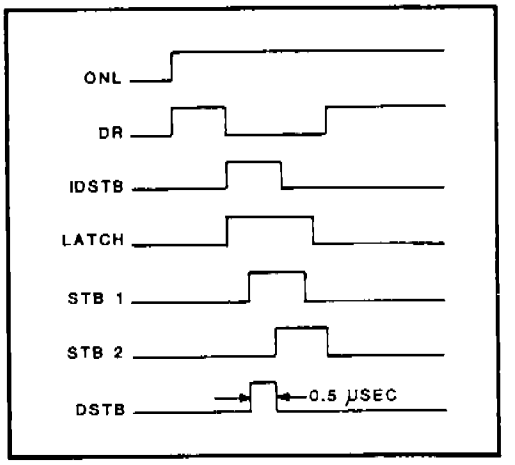

FIGURE 2-5.
DATAPRODUCTS INTERFACE TIMING

2.0 THEORY OF OPERATION

2.4 PRINT BUFFER

The block diagram for the Logic A PCBA print buffer load logic is shown in Figure 2-6. The print buffer is a 8-bit RAM that holds a full line of 132, 176, or 220 characters while the Underline buffer holds a full line of single bits.

As each printable character is loaded into the print buffer, the static RAM counter is incremented one count by SRCLK. At count 132, 176, or 220, ESR (End Static RAM) goes true and sets the print flip-flop (PRT). When PRT is set, the Load Buffer State is ended and the Print State begins. The print buffer can not be loaded when the printer is in the Print State (PRT) or the Paper Feed State (PPF).

A Carriage Return at the end of the character line, with no Line Feed or Form Feed, begins the Underline process. NREC (Recirculate) is normally false during buffer loading. The flip-flop preceding NREC is set by the Carriage Return at the end of the line, and NREC becomes true. Each time an underline is received, the Underline bit is loaded into the underline RAM and the associated character is not changed. A space character recirculates the buffer one position.

A line feed resets the NREC flip-flop and the printer advances to the Print State.

2.0 THEORY OF OPERATION

2.4 PRINT BUFFER (Continued)

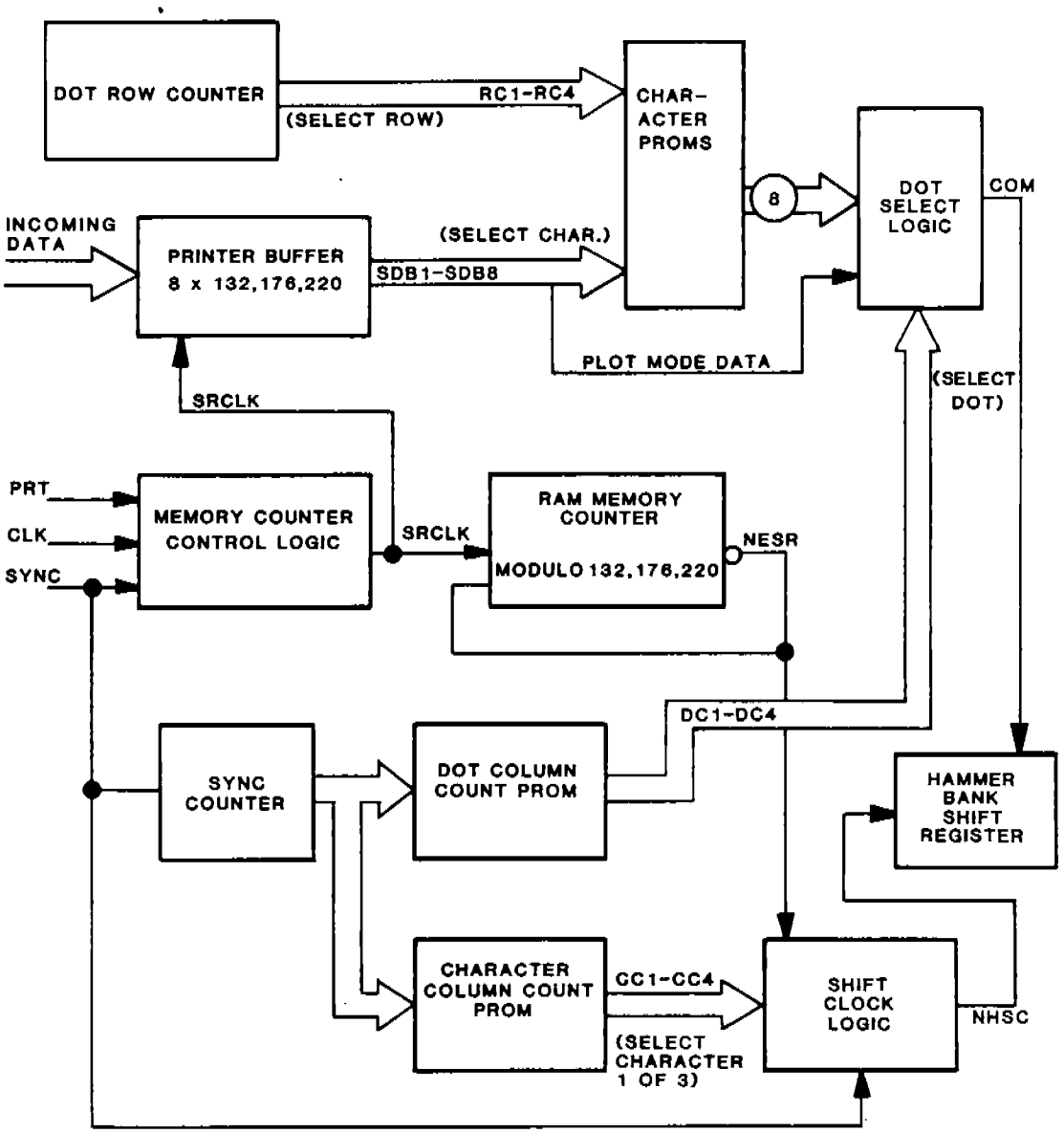

FIGURE 2-6.
DOT SELECTION BLOCK DIAGRAM

2.0 THEORY OF OPERATION

2.5 PRINT STATE

The Print State is entered at the end of the Load Buffer State when:

- ◊ Printable characters are in the buffer (NPTCH true).
- ◊ The end of data transfer is reached (EDT true).
- ◊ The shuttle is up to speed (SUS true).
- ◊ RESYNC occurs.

A paper motion command (NDLNFD or NDFMFD) can signal the end of data transfer.

A line of characters or a dot row is printed, depending on whether a Plot Mode command was included in the data stream. If no Plot Mode command is received, character printing begins, using print buffer bytes to address character patterns contained in the Character Generator PROMS. When a Plot Mode command is included, the print buffer byte bypasses the Character Generator PROMs and goes directly to the COM line via the multiplexer.

The Print State ends and the Paper Feed State is entered when the last dot row of the character line has been printed (EOP is true). Although paper is advanced by single dot rows during the Print State, the Paper Feed State is not entered until the last dot row has been printed.

The principal logic elements involved in Print State operations are shown in Figure 2-6.

2.6 CHARACTER GENERATION

The complete character line of 132, 176, or 220 eight-bit bytes stored in the buffer is addressed sequentially by the Static RAM counter as it is clocked by SRCLK (Static RAM Clock). This is shown in Figure 2-6. When each byte is addressed, it is read out as data bits SDB1 through SDB8. These data bits are applied to the character PROMs and to PROM address control logic on the Logic A PCBA. The control logic determines PROM selection.

2.0 THEORY OF OPERATION

2.6 CHARACTER GENERATION (Continued)

Dot patterns for each character set are stored in individual Character PROM addresses. Each dot pattern is formed in a matrix 12 dot columns wide and 9 dot rows high (Figure 2-7). Of the 12 dot columns, nine are used for the character and three are used for intercharacter spacing. An uppercase character matrix occupies the top seven horizontal rows, with the two bottom rows remaining blank for interline spacing. Typical characters are shown in Figure 2-8. A lowercase character matrix occupies the top nine horizontal rows, with three bottom rows remaining blank for interline spacing. Underlines are printed in the ninth row only. With the normal 6 lpi line spacing, there are 12 dot rows from the top of one character line to the top of the next. When 8 lpi is selected, the character line interval is reduced from 12 to 9 dot rows. 9 lpi has an interval of 8 dot rows and 10 lpi has an interval of 7 dot rows. Elongated characters (Figure 2-9) can be generated from the normal matrix. This is done by printing each dot row in the matrix twice, except for the first and last rows. Consequently, an elongated uppercase character is made up of 12 dot rows instead of seven.

See Figure 2-6. In character printing, the printer can print dots in only six of the twelve dot columns in any dot row. This is because dots cannot be printed in two adjacent dot columns within the row, except during double density. The matrix for an addressed character is read out one row at a time by the binary row count RC1 through RC4. The character code is recirculated for each dot row. A dot may appear in any one of twelve dot matrix columns. Because the PROMs provide only eight outputs, the encoded PROM output line must be read twice, 8 at a time. Bits on the eight lines are multiplexed one line at a time onto the COM line to the Hammer Driver PCBA. Multiplexing is under control of the dot column counter output (DC1-DC4). COM is then clocked into the hammer driver logic on the Hammer Driver PCBA. In Plot Mode operation, the data stream for each character line bypasses the character generators and is printed in a single dot row made up of the data bits in each byte.

During the SYNC period, information appearing at the hammer driver logic consists of a "1" bit (dot) or a "0" bit (no dot) in a specific dot column and row for every character read from the printer buffer. However, only every third bit (representing every third hammer location) in the COM data stream is clocked into the hammer driver shift register so that the 44(132/3) hammer driver circuits may be pulsed.

2.0 THEORY OF OPERATION

2.6 CHARACTER GENERATION (Continued)

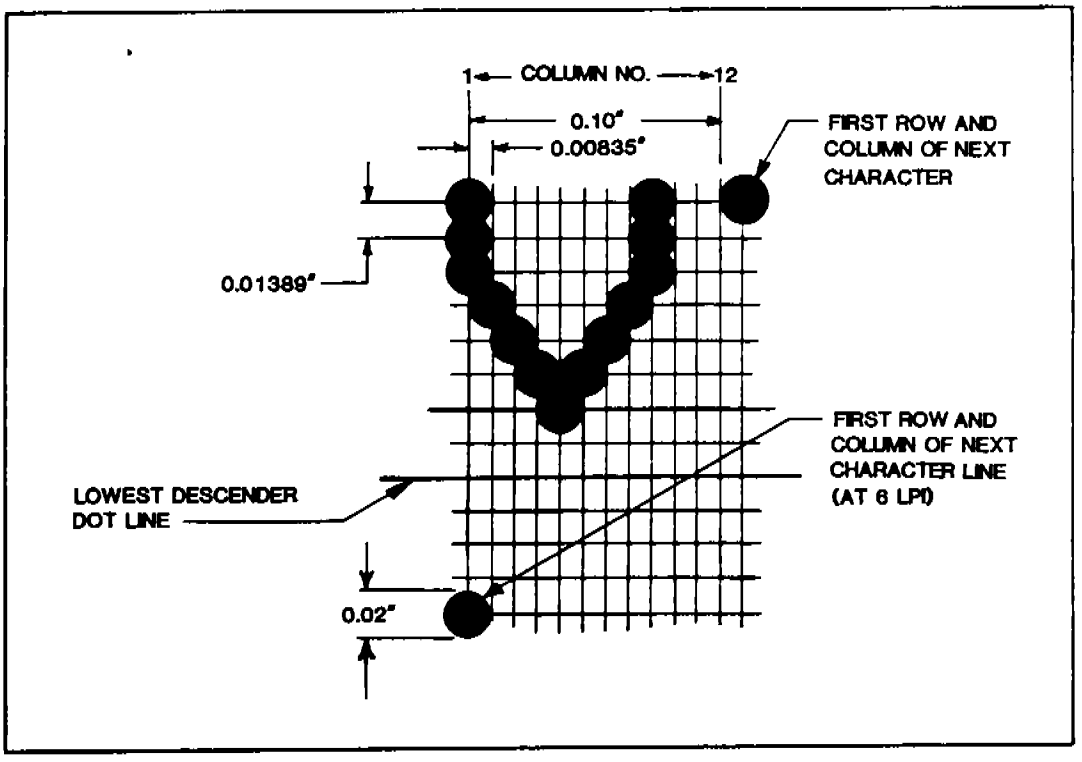

FIGURE 2-7.
DOT MATRIX SPECIFICATIONS

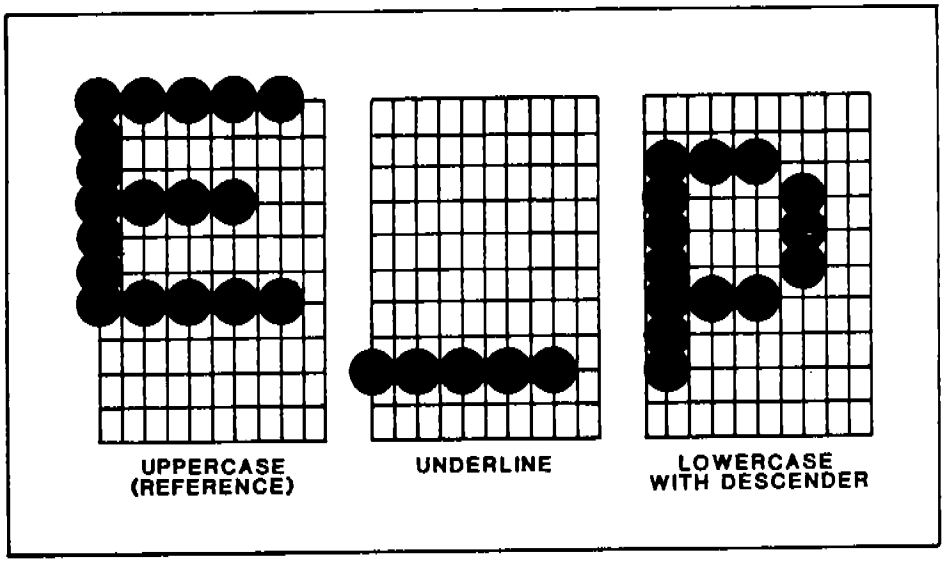

FIGURE 2-8.
TYPICAL CHARACTERS (DATA PROCESSING MODE)

2.0 THEORY OF OPERATION

2.6 CHARACTER GENERATION (Continued)

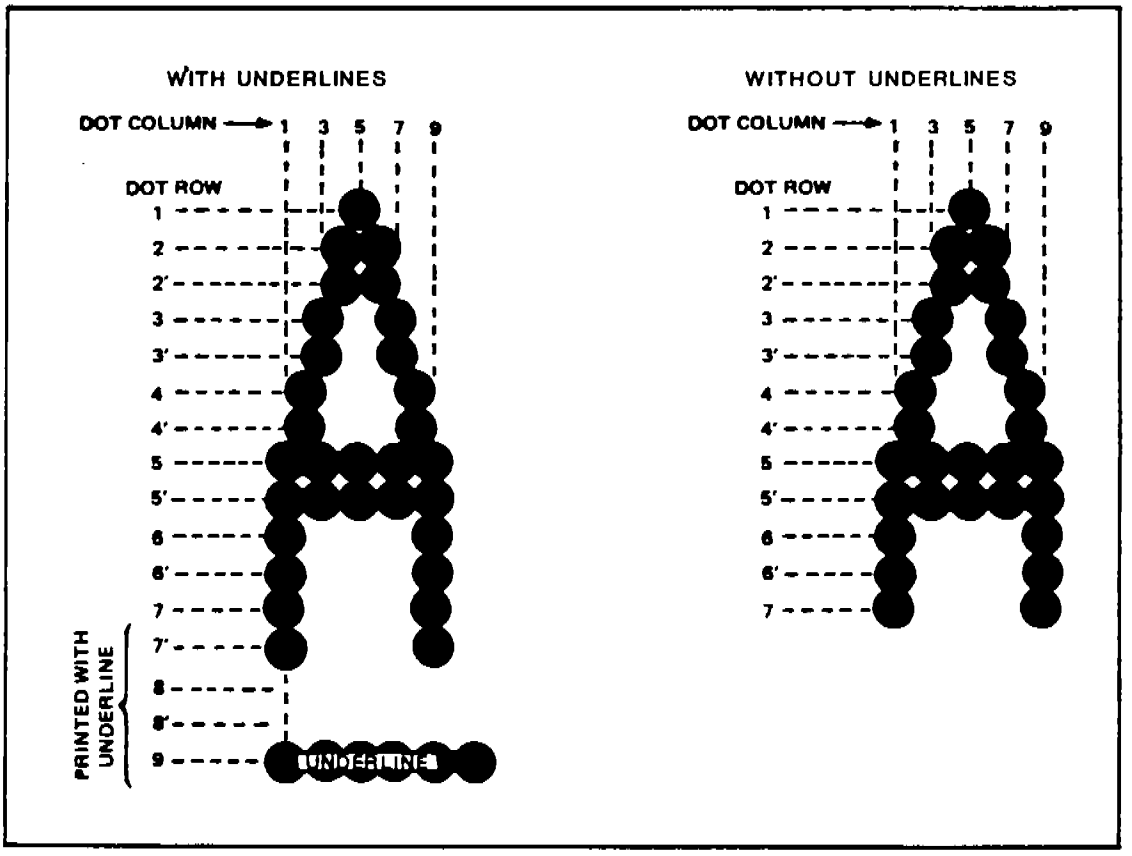

FIGURE 2-9.
ELONGATED CHARACTERS WITH AND WITHOUT DESCENDERS

2.7 CHARACTER GENERATION LOGIC

The Logic A PCBA provides signals that multiplex the character dot pattern from a PROM address to the hammerbank shift register. This address is defined by the character generator decode. Correlation of dot locations within the dot pattern is maintained during the transfer.

See Figure 2-6. A dot column count (DC1-DC4) defines each of the 12 dot columns that are contained within a character column in the character line. Each hammer prints characters in three adjacent character columns within the character line. For a given dot row, all hammers are simultaneously positioned to print a dot in the same dot column of the first, second or third character group. The dot column count multiplexes outputs of the character generator decode to the COM line.

2.0 THEORY OF OPERATION

2.7 CHARACTER GENERATION LOGIC (Continued)

During any SYNC period of a print cycle, the hammer driver shift register on the Hammer Driver PCBA contains dot information for a specific dot column within the 12 dot column cell. (Character printing may occur in any column within the cell.) There are 36 SYNC periods for each dot row and 12 for each of the three character columns covered by the printing action.

On the shuttle stroke from left to right, the hammer shift register is clocked 44 times during each of 12 SYNC periods to load and print dot information for the first of three character groups. The hammer shift register clocking is repeated twice more for the other two character groups. In all, 44 bits of information are loaded and printed for each of the 36 dot columns, beginning at dot column 1 of the first character and ending at dot column 12 of the third character.

On the shuttle stroke from right to left, operation is the same except that dots are loaded and printed beginning at dot column 12 of the third character and ending at dot column 1 of the first character. The block diagram in Figure 2-10 shows the dot column and character column counts. The correlation between the various counts and the formation of the character is illustrated in Figure 2-11.

In Figure 2-10, the SYNC Counter on the Logic A PCBA is cleared by RESYNC as the timing disk begins each half a rotation. Note that each half revolution of the disk provides one back and forth cycle of the shuttle (two dot rows).

As subsequent SYNC pulses are generated by timing disk rotation, outputs of the SYNC Counter appear at three PROM devices:

- ◊ Dot Column Count PROM – decodes counts to provide the dot column count (DC1-DC4).
- ◊ Character Column Count PROM – decodes counts for the character column count (NTA A4 and A6).
- ◊ Control Decode PROM – decodes various counts which generate control signals NSPT, NSPFP, NEMOV and NTA (A7 only).

The Dot Column Count PROM encodes a binary count every 12th SYNC pulse that defines the first of three character columns. The PROM repeats the process twice more for the second and third character columns followed by an additional count of 13 pulses to time out the shuttle turnaround at the right end of shuttle travel. As the shuttle moves left, the three groups of 12 pulses are repeated. Finally, a count of 13 SYNC pulses, followed by RESYNC, times out the turnaround at the left end. This completes the shuttle cycle.

2.0 THEORY OF OPERATION

2.7 CHARACTER GENERATION LOGIC (Continued)

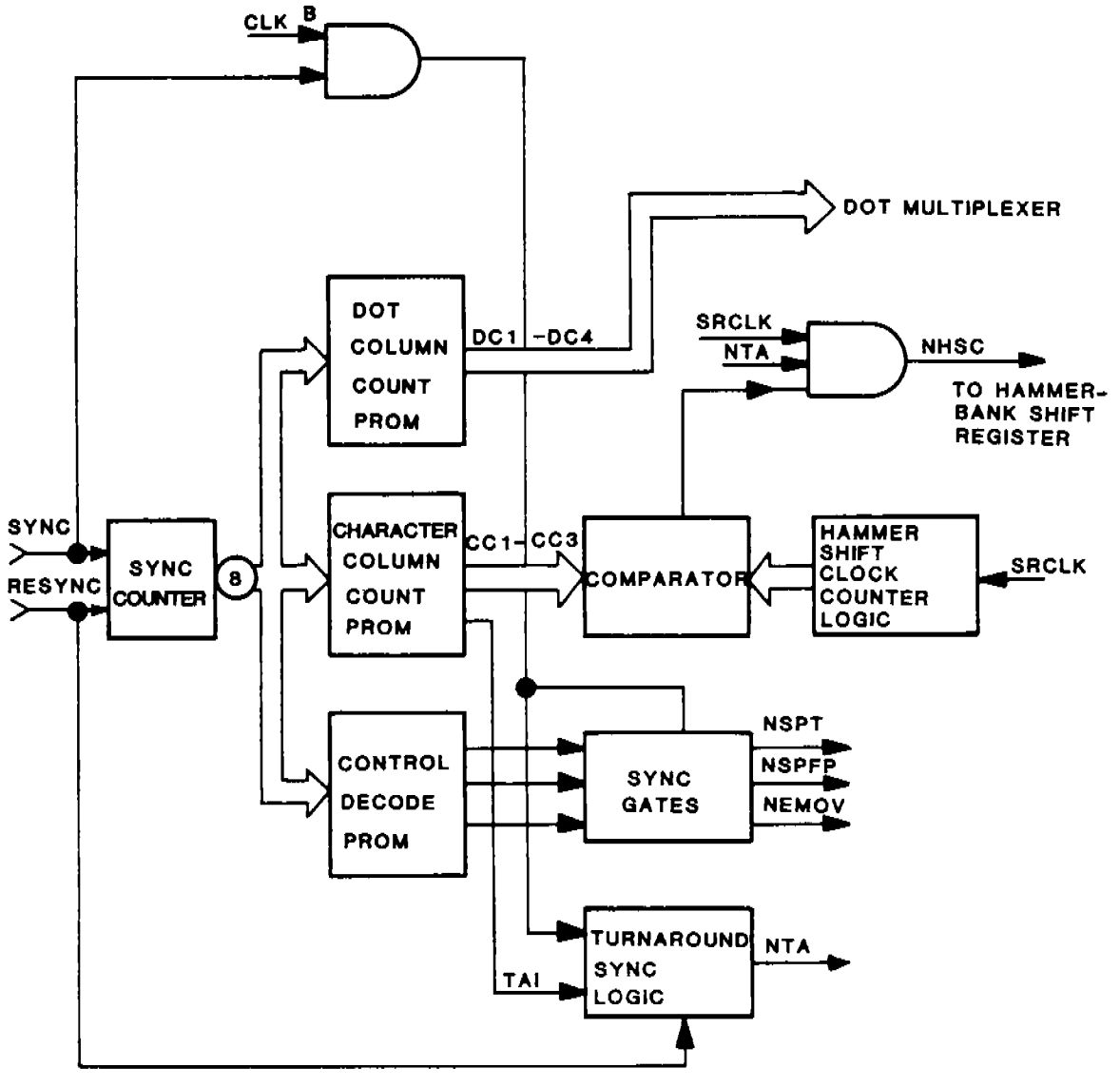

FIGURE 2-10.
DOT COLUMN AND CHARACTER COLUMN COUNTER BLOCK DIAGRAM

2.0 THEORY OF OPERATION

2.7 CHARACTER GENERATION LOGIC (Continued)

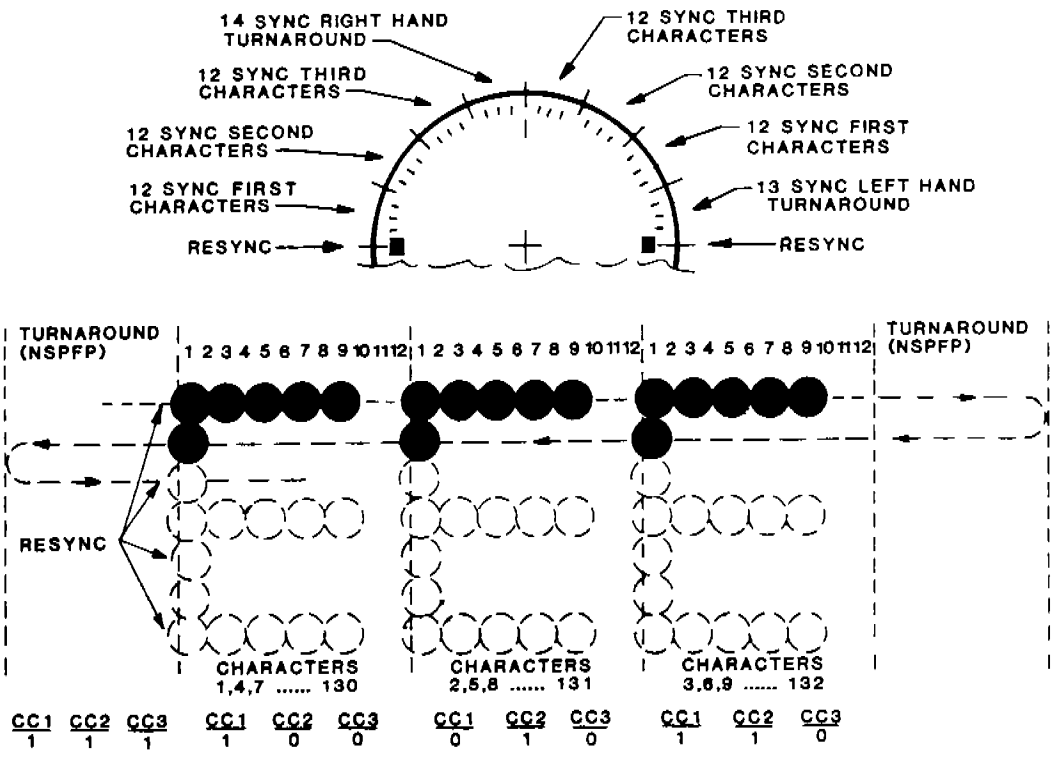

FIGURE 2-11.
DOT COLUMN AND CHARACTER COLUMN TIMING FOR ONE SHUTTLE CYCLE

The Character Column Count PROM provides outputs CC1-CC3 and the turnaround signal, NTA. The binary count generates hammer shift clock pulses (NHSC) during the 36 SYNC periods of each shuttle stroke that dot row information may be printed.

Hammer Shift Clock (HSC) Counter Logic is a count of three counter clocked by SRCLK. Its output appears at a comparator which asserts its "equals" output only when:

1. The first character is read from the printer buffer and the bits CC1-CC3 are encoded 01.

2.0 THEORY OF OPERATION

2.7 CHARACTER GENERATION LOGIC (Continued)

2. The second character is read and CC1-CC3 is encoded 10 (binary).

3. The third character is read and CC1-CC3 is encoded 11 (binary).

The hammerbank shift register is clocked by NHSC (gated SRCLK pulses) to load with data correlated to character position one, two, or three.

The signal TAI is generated to inhibit any NHSC pulses during turnaround periods. TAI is synchronized with the SYNC and CLKB pulses. This provides the signal NTA which controls the NHSC gate.

Three other control signals are generated by the control decode:

1. NSPT (Start Print) initiates the Print State in state control logic.

2. NSPFP (Start Paper Feed Pulse) increments the dot row counter.

3. NEMOV (Early Move) occurs with NSPFP (at either end of the shuttle travel) and initiates paper movement to the next dot row during the Print State.

2.8 DOT ROW COUNTER LOGIC

Dot Row Counter Logic on the Logic B PCBA generates a 4-bit binary count (RC1-RC4). RC1-RC4 cause the PROM output to define each row of dots in the entire character line, including interline space.

When the Print (PRT) State is entered, the three character groups are read from the buffer and the row counter is incremented by the Start Paper Feed Pulses (SPFP).

Row Counter Reset (RCR) resets the row counter at 12 pulses for 6 lpi line spacing, or nine pulses for 8 lpi spacing. The following Even Paper Pulse (EPP) resets RCR. The actual character is normally made up of seven dot rows. However, a nine row character is printed if NPAL is true. NPAL is derived from the Underline signal SDUL, or from a Print Nine Rows flag from the PROM decoder.

When the last row in the character has been printed, counter logic provides:

1. End of Print (EOP) signal, terminating the Print State.

2.0 THEORY OF OPERATION

2.8 DOT ROW COUNTER LOGIC (Continued)

2. Paper Feed State entry to advance paper to the top of the next character field.

EOP also sets the Paper Feed mode (PPF) and the row counter is subsequently clocked by Odd Paper Feed pulses (NOPP).

When printing elongated characters, the Decoded Elongated Character (NDELC) signal causes every second row counter clock pulse RCLK (SPFP or NOPP) to increment the row counter. This causes each row of dots in the character (except the first and last rows) to be printed twice.

In Plot Mode operation, each line of data specifies dots to be printed in a single dot row. The PM signal (instead of the decoded row count) enables the SPFP pulse to generate End of Print (EOP).

2.9 PLOT MODE OPERATION

Operation in Plot Mode is similar to character printing except that each line of data produces a single dot row instead of a full character line.

In Plot Mode, data appears only on Static RAM output lines SDB1 through SDB6. A decoded Plot Mode code (05H) accompanying the data causes the signal PM to direct the buffer output to the COM line instead of the character PROMs. A data bit "1" will cause a dot to be printed.

Dots for each 6 bit code are printed in the odd numbered dot columns within the 0.1 inch character width. Bit 6 of the code appears at the right side, with bit 1 at the left (Figure 2-12). A form 13.2 inches wide will accommodate 792 dot columns (6 x 132).

The Plot Mode command must accompany each line of plot data and set the PM flip-flop. When the dot row is complete, PM is cleared by the term EPFP.

The signal PM inhibits the underline control (SDUL) and enables data bits (SDBn) to be multiplexed to the COM line (the input to the hammer shift register).

PM also overrides the decoded rows per character count signal EOP (End of Print), so that each line of data is plotted without character line definition. Dot rows advance at the standard printing rate, but overall paper motion depends on the host computer reloading the buffer within stroke time.

2.0 THEORY OF OPERATION

2.9 PLOT MODE OPERATION (Continued)

In normal plotting, dots are printed only during shuttle movement from left to right. However, the plotting rate may be increased by installing jumper W4. This jumper causes plotting to occur during both directions of shuttle travel.

● CAUTION ●

TO AVOID DAMAGE TO THE HAMMER DRIVER CIRCUITS, DO NOT CONNECT JUMPER W4 WITHOUT FIRST CONSULTING THE PRECAUTIONS IN THE P-SERIES USER'S REFERENCE MANUAL.

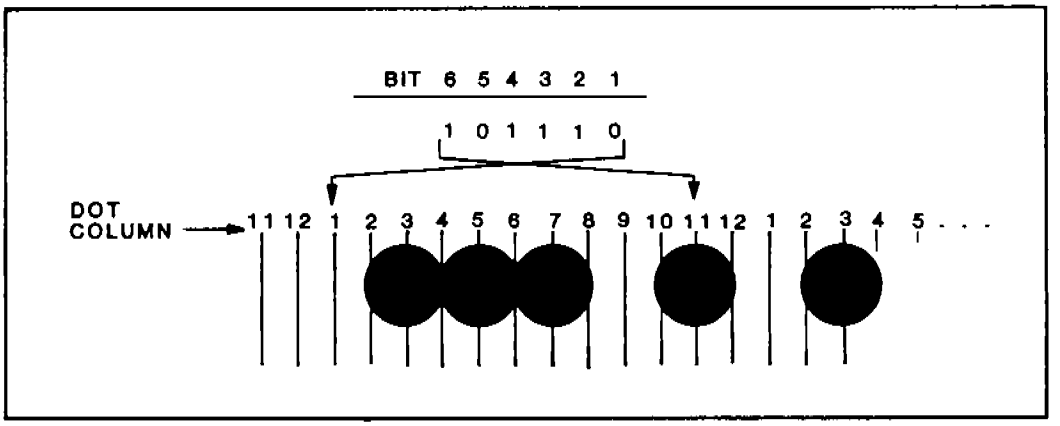

FIGURE 2-12.
PLOTTING THE SIX BIT CODE

Half dot plotting may be used to print solid lines, areas of greater density, or to improve resolution. In half dot plotting, dots are first printed in even numbered dot columns as the shuttle moves from left to right. Paper is not advanced for the dot row. The odd column dots are interspersed with dots printed in even numbered dot columns of that same dot row using OSH.

Half dot plotting is specified by the code (04H). The decoded command (NHDP) inhibits the NOPP pulse from generating a row clock (RCLK) pulse. This inhibits paper motion. The half dot code and data must precede any normal Plot Mode code and data. Paper motion occurs only after the second shuttle excursion, even if a line feed code is used for each data transfer termination in half dot plot.

2.0 THEORY OF OPERATION

2.10 HAMMER DRIVER CIRCUITS

Forty-four print hammers are each controlled by an electromagnetic coil, a driver, and logic which controls the energizing of the coil. Each hammer prints dots for three adjacent characters.. Logic and circuits on the Hammer Driver PCBA are illustrated in Figure 2-13. The timing of these circuits is shown in Figure 2-14.

Circuits on the Hammer Driver PCBA perform the following functions:

1. Convert 44 serial data bits on the COM line to 44 parallel data bits.

2. Control the energizing of hammer coils to print dots in accordance with the parallel data.

Following a SYNC pulse, Hammer Shift Clock pulses (NHSC) load 44 bits from the COM line into the hammer driver shift register. Every third bit (of 132 bits) on the COM line is clocked into the shift register, selecting dot information for the first of the three characters to be printed by each hammer.

After 132 microseconds the last bit is clocked into the shift register. The next SYNC pulse causes Hammer Clock (NHCK) to load the contents of the shift register into the 44 data latches.

When a dot is to be printed, the data latch for that hammer is set and the corresponding Darlington driver transistor is forward biased. This completes the current path for the +28 V supply through the hammer coil to ground which energizes the coil. When the coil is energized, the hammer is released to impact the ribbon against the paper and print the dot.

All coils are deenergized when the Hammer Reset (HRS) from the Logic B PCBA resets the data latch. This permits the rebounding hammers to be recaptured by the permanent magnet.

2.0 THEORY OF OPERATION

2.10 HAMMER DRIVER CIRCUITS (Continued)

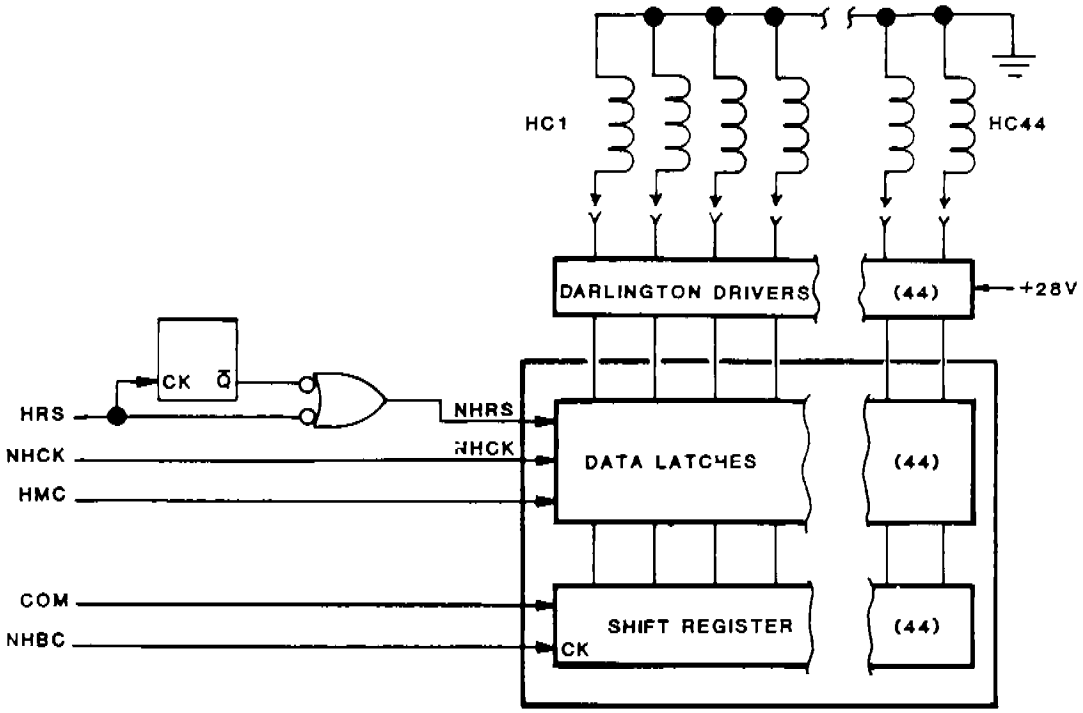

FIGURE 2-13.
HAMMER DRIVER FUNCTIONAL BLOCK DIAGRAM

2.0 THEORY OF OPERATION

2.10 HAMMER DRIVER CIRCUITS (Continued)

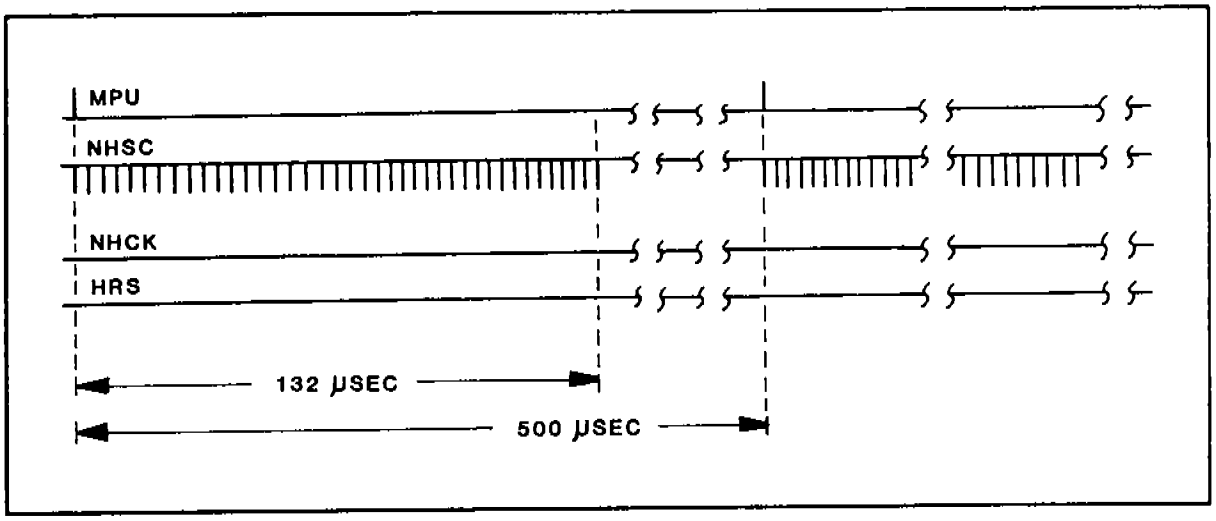

FIGURE 2-14.
HAMMER DRIVER CIRCUITS TIMING

2.11 PRINT SYNCHRONIZATION

Print hammer activation is synchronized with shuttle movement by signals obtained from the magnetic pickup (MPU). Refer to Figure 2-15. The magnetic pickup is next to the timing disk mounted on the rear of the shuttle drive flywheel. The disk is oriented so that timing signals relate precisely to the shuttle position. The MPU senses variations in magnetic reluctance from 198 apertures on the rear of the flywheel near the perimeter of the timing disk. The apertures are sensed by the magnetic pickup as the disk rotates. Two aperture locations at opposite ends of the disk are of double width (material between two adjacent apertures is removed). These double width apertures separate the remaining 198 single width apertures into two groups of 99. These wider apertures generate a RESYNC signal. Their location relative to the double lobed cam make RESYNC occur each time the shuttle begins moving to the right.

The 198 single width apertures generate 198 SYNC pulses. Full rotation of the disk provides four printing periods which control printing during two back and forth shuttle cycles. Each printing period is followed by a "turnaround" period when the shuttle movement is reversed and no printing occurs. When turnaround occurs, paper is advanced 0.0139 inch to the next dot row.

2.0 THEORY OF OPERATION

2.11 PRINT SYNCHRONIZATION (Continued)

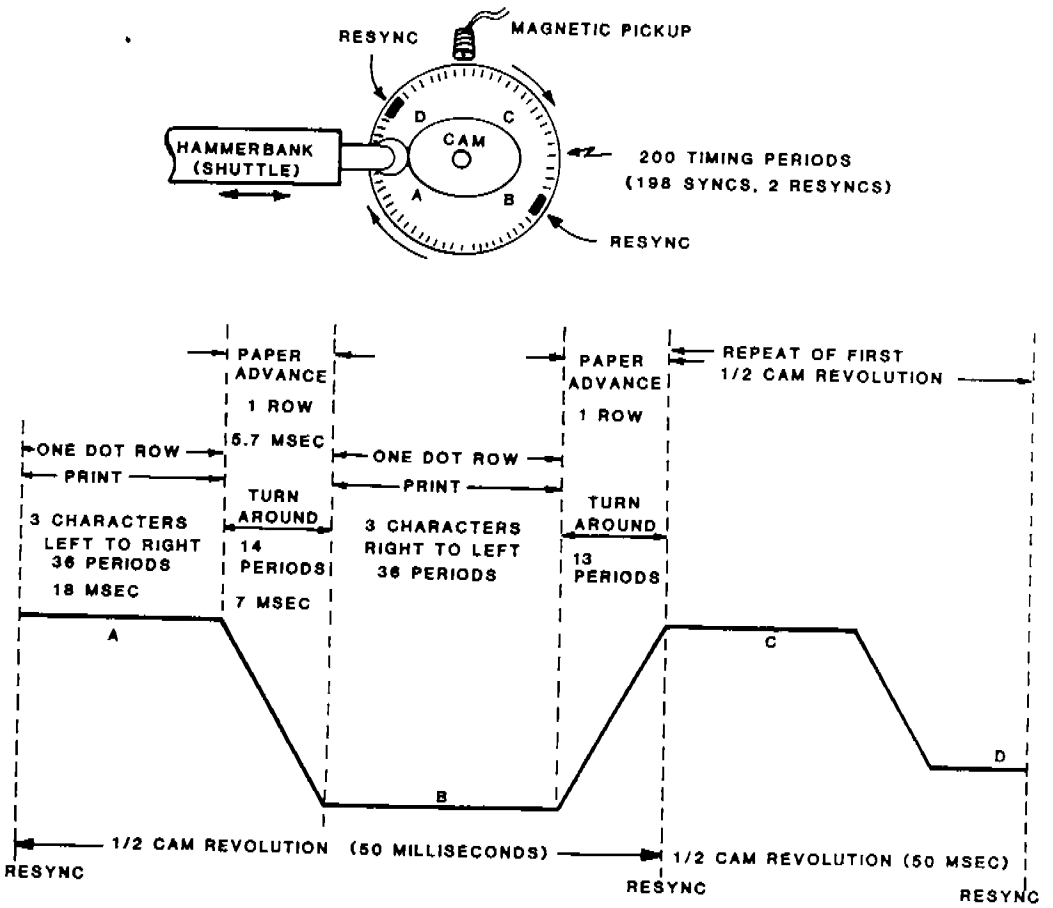

FIGURE 2-15.
DOT ROW TIMING VS TIMING DISK AND CAM POSITION

During each of the four printing periods, an entire 36 dot column dot row three characters wide is printed by each of 44 hammers. Each character position contains 12 dot columns (nine for the character and three for intercharacter spacing) and requires 12 SYNC pulses. Therefore, a total of 36 (3 x 12) SYNC periods are required as each dot row is printed.

The resulting SYNC signal is distributed to other printer logic including detection logic for the double width aperture ("missing pulse") in the timing disk. The resulting RESYNC pulse synchronizes printer logic with the beginning of each left to right shuttle transition.

2.0 THEORY OF OPERATION

2.11 PRINT SYNCHRONIZATION (Continued)

The SYNC signal synchronized with the printer clock performs the following functions:

1. Initiates a high speed scan of all 132 print buffer locations during which each character is presented to character generation logic.

2. Activates all hammers armed with logic "1's" during the previous scan of the printer buffer.

3. Initiates a time out period which controls generation of the Hammer Reset (NHRS) signal. This signal resets hammer driver circuits previously activated by SYNC for the prior dot location.

4. Causes the Dot Column and Character Column counters to be updated. These counters, described in succeeding sections, determine which hammers are activated during each SYNC period and for which dot rows.

The timing of SYNC and RESYNC signals is further illustrated in Figure 2-16. The roughly sinusoidal output of the magnetic pickup is amplified and converted to a TTL compatible square pulse by a circuit on the Power Supply PCBA. The resulting MPU signal is logically synchronized with the printer clock (CLK).

The MPU linear amplifier circuit on the Power Supply PCBA amplifies the low level ac signal from the magnetic pickup and transmits it as a TTL level digital signal to print synchronizing circuits on the Logic B PCBA.

Typical signal levels received from the magnetic pickup are:

SYNC 2.0 V to 3.5 V (p-p)

RESYNC 4 V to 6 V (p-p)

2.0 THEORY OF OPERATION

2.11 PRINT SYNCHRONIZATION (Continued)

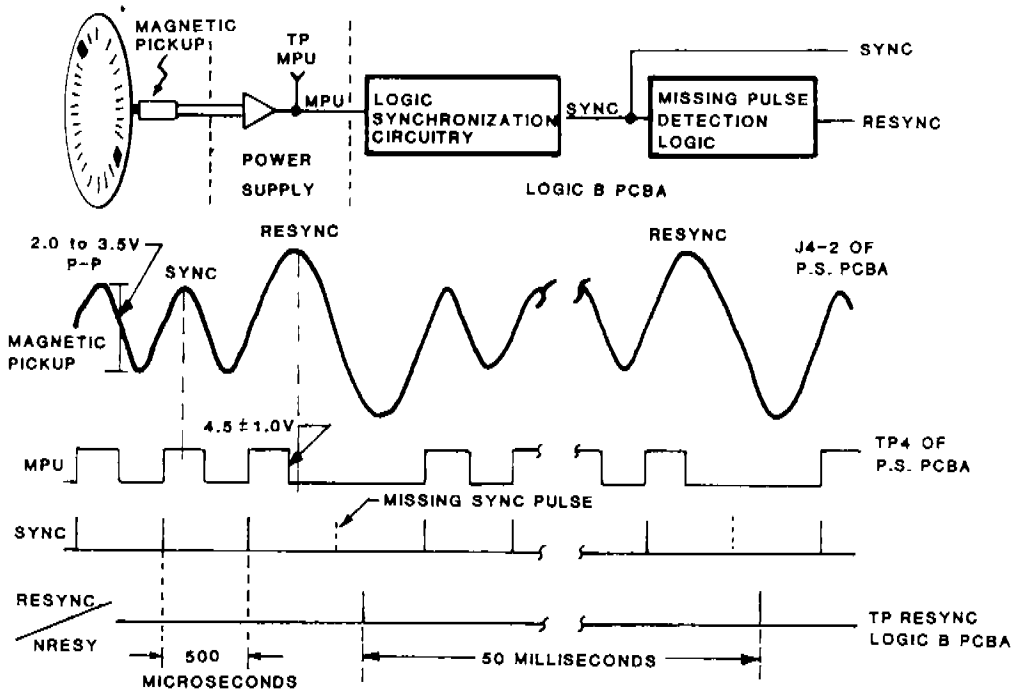

FIGURE 2-16.
OPERATION OF THE MPU CIRCUIT

2.12 PRINT MECHANISM

The printer mechanism prints characters by using 44 print hammers that are fixed to a shuttle. The shuttle moves horizontally back and forth, through three character spaces (approximately 0.3 inch). Each hammer prints the entire dot pattern of three adjacent character columns. Therefore, the 44 hammers are able to print a full 132 character lines (44 x 3 = 132).

Each hammer is a stiff leaf spring held securely on the hammer-bank by a screw passing through its end. At its other end is a pointed tip. A single permanent magnet, running the full length of the hammerbank, holds all 44 hammer springs in the retracted (tensioned) state.

2.0 THEORY OF OPERATION

2.12 PRINT MECHANISM (Continued)

Each print hammer is associated with a normally deenergized coil mounted on a magnetized pole pin (Figure 2-17). The end of the coil directly contacts the free end of the hammer spring. When hammer driver logic determines that the hammer is to print a dot, a current pulse energizes the coil. The polarity of the resulting electromagnetic field opposes the field of the permanent magnet, releasing the hammer, and driving the hammer tip against the ribbon and paper, leaving a dot of ink (Figure 2-18).

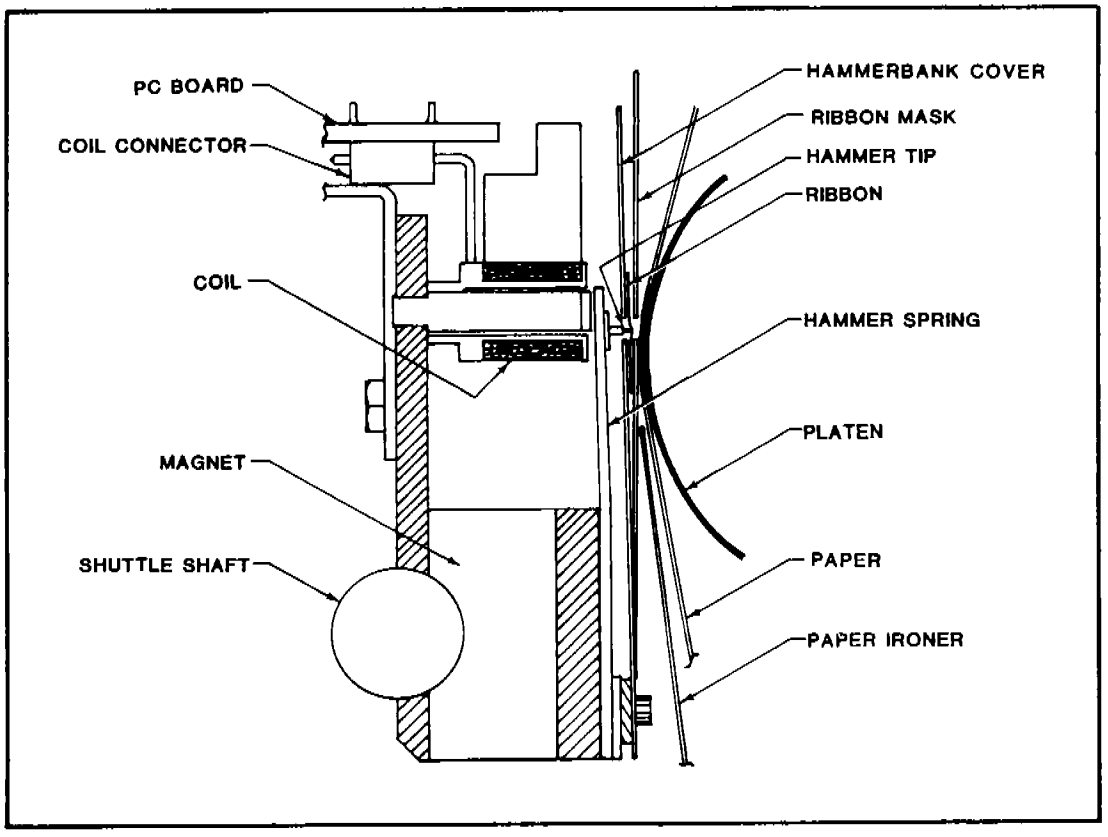

FIGURE 2-17.
HAMMER AND SHUTTLE ARRANGEMENT, CROSS SECTION

2.0 THEORY OF OPERATION

2.12 PRINT MECHANISM (Continued)

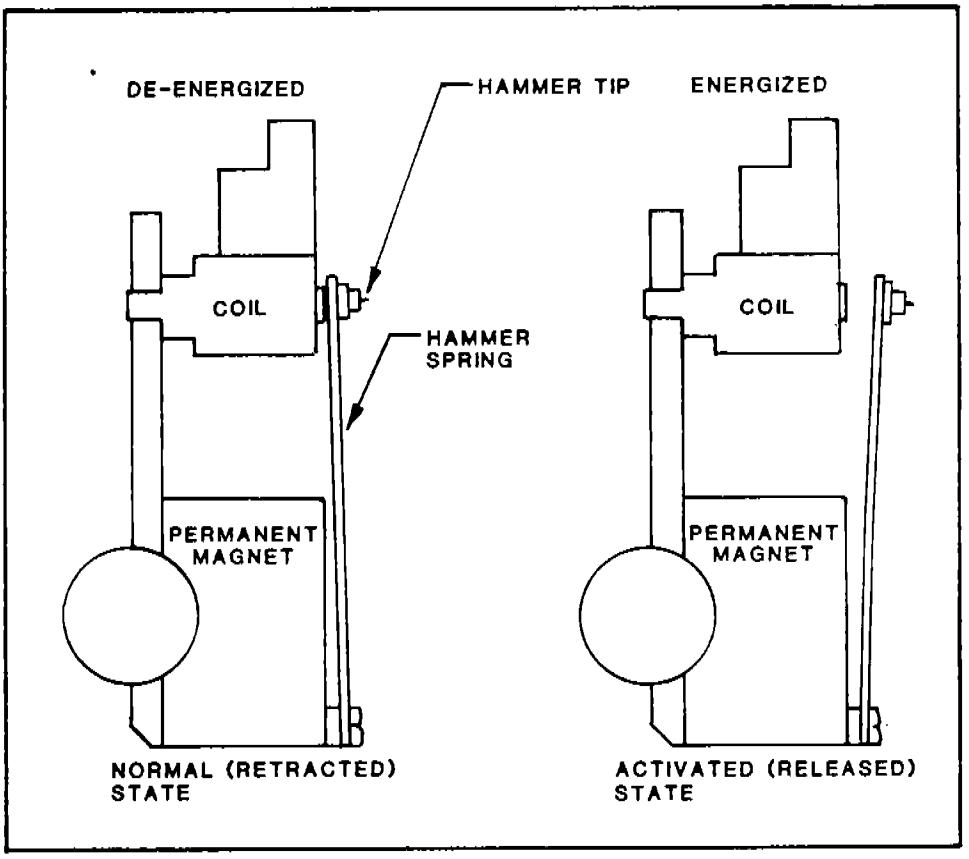

FIGURE 2-18.
PRINT HAMMER ACTION

During flight time the coil is de-energized. As the hammer rebounds after striking, the permanent magnet recaptures the hammer and holds it ready for the next stroke. Flight time is the same for all 44 hammers. Any hammer may produce up to 1000 impacts per second.

A line of characters is created by a scanning pattern (Figure 2-19). All dots in any row of the dot matrix are printed in a single scan as the shuttle moves from one side to the other through three character spaces. The order in which a single character is formed by a single print hammer is shown in Figure 2-20.

2.0 THEORY OF OPERATION

2.12 PRINT MECHANISM (Continued)

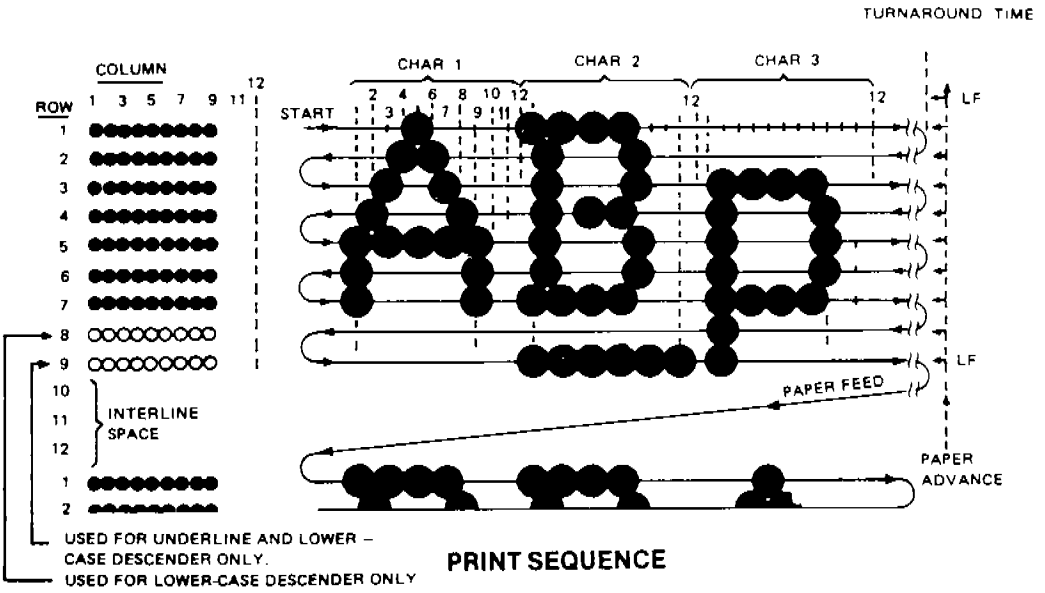

FIGURE 2-19.
STANDARD CHARACTER FORMATION

Successive rows of dots are printed as the paper is advanced one dot row (0.0139 inch) at a time, with the shuttle moving in alternate directions for alternate rows of dots.

The shuttle is moved through its horizontal scan by a double lobed cam mounted on the motor driven flywheel. This cam produces two back and forth cycles for every revolution of the flywheel. Each cam lobe forces the shuttle to the left, against the shuttle spring which returns the shuttle to the right as the cam revolves to its low point/null (Figure 2-21).

2.0 THEORY OF OPERATION

2.12 PRINT MECHANISM (Continued)

As the shuttle is driven to the left, the other cam lobe drives the counterweight to the right against the counterweight spring. This spring then returns the counterweight to the left as the cam revolves to its other low point (Figure 2-21). This symmetrical arrangement reduces vibration by balancing the horizontal reaction forces of the shuttle.

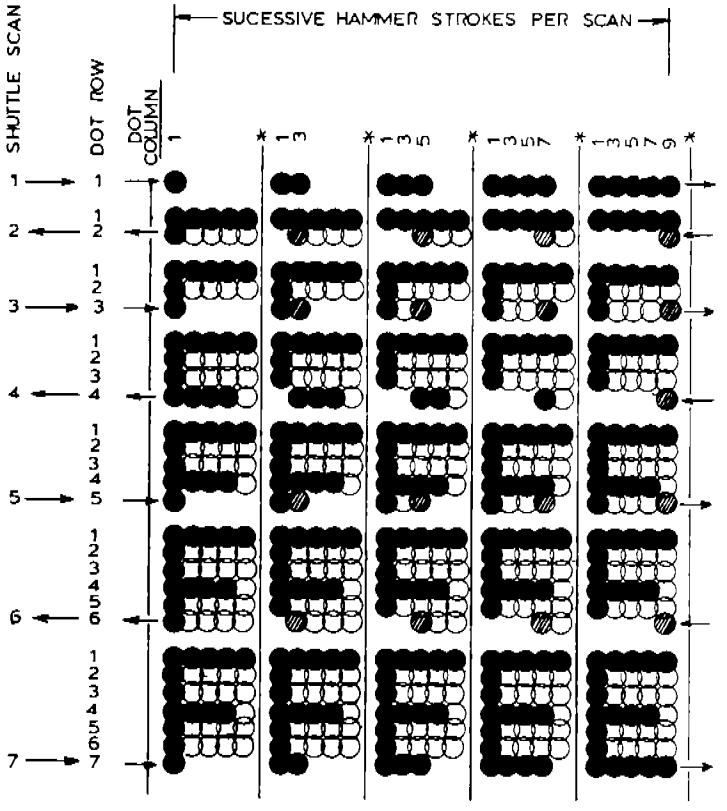

* EVEN COLUMN DOT CENTERS WITHIN THE PRINTED CHARACTER AREA AND INTERCHARACTER SPACE HAMMER POSITIONS ARE NOT ILLUSTRATED IN THIS DIAGRAM.

NOTE: ● = DOT

○ = NO DOT WHERE HAMMER HAS BEEN

◐ = HAMMER POSITION

FIGURE 2-20.
CHARACTER FORMATION BY ONE HAMMER

2.0 THEORY OF OPERATION

2.12 PRINT MECHANISM (Continued)

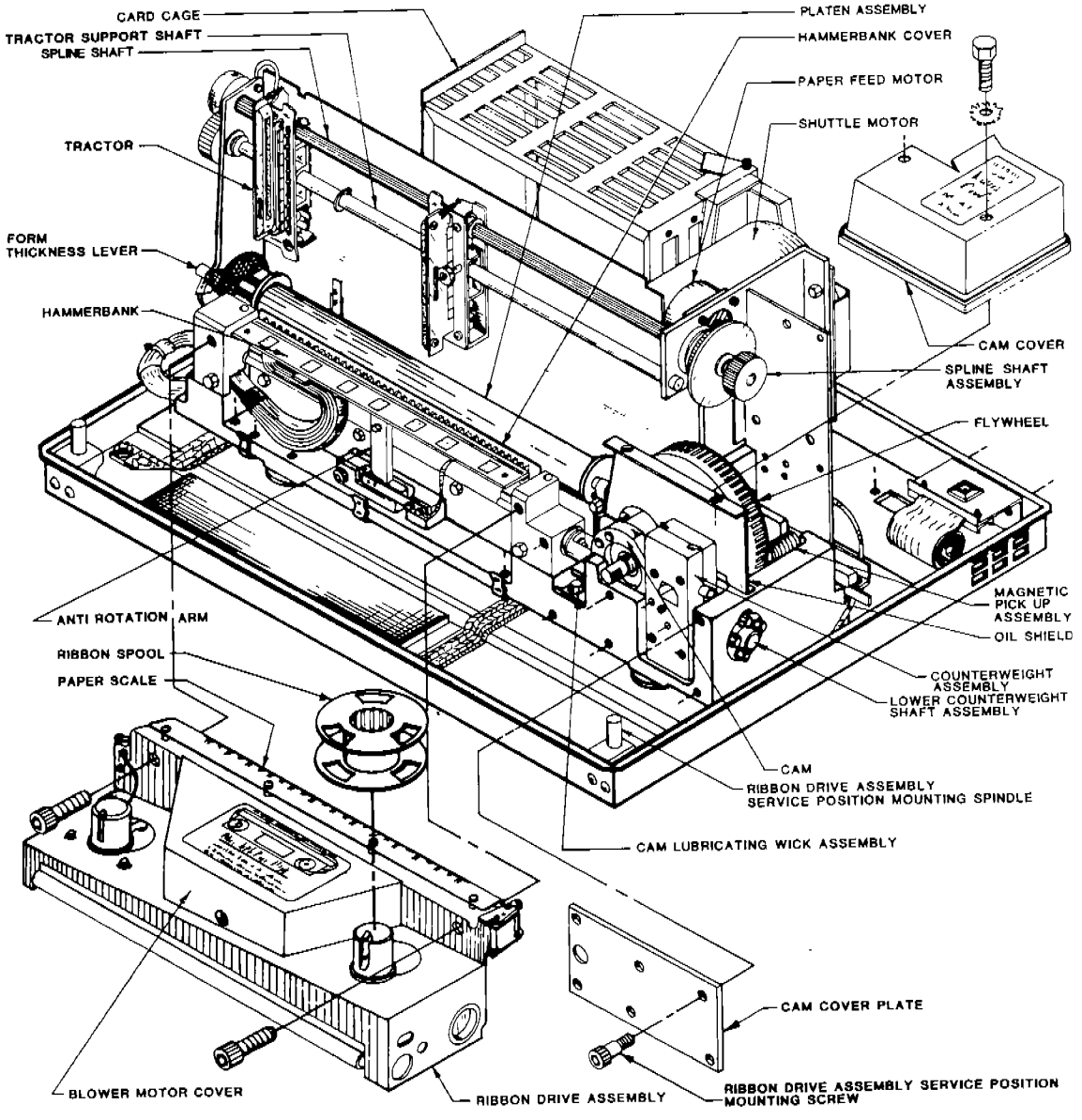

FIGURE 2-21.
HAMMERBANK/SHUTTLE COMPONENTS

2.0 THEORY OF OPERATION

2.13 PAPER FEED STATE

The Paper Feed State is entered by setting the Paper Feed flip-flop (PPF). This can be done from either the Load Buffer State or the Print State. When the printer is in the Load Buffer State, a "slew" (NSLW) will be generated on the Logic B PCBA to set PPF if there are no printable characters in the print buffer prior to receiving a Line Feed, Form Feed, or an EVFU channel command.

When the printer is in the Print State, PPF will be set by EOP (End of Print) at the next CLKB count. EOP becomes true when the dot row counter has counted the seventh row in an uppercase character and that row has been printed. Likewise, EOP becomes true when the ninth row of either underlines or lowercase characters with descenders has been counted and printed.

Paper feed is implemented by the paper tractors that are propelled by a four phase stepper motor. Motor speed is governed by a velocity PROM that is addressed by a high speed counter to supply a specific acceleration/deceleration profile for paper movement relative to the dot row count. In addition, the paper feed velocity counter sends paper feed signals PF1/PF2 to the Paper Feed control where they are developed into drive current to turn the paper feed motor. The Paper Feed State is terminated by resetting the PPF flip-flop with EPFP (End Paper Feed Pulse). EPFP is generated at the end of paper motion when the following events occur together:

1. The final Paper Feed pulse pair (PF1/PF2) has been sent to the motor drive circuits on the Power Supply PCBA.

2. Slew (NSLW) is inactive.

3. The Row Counter Reset (NRCR) pulse occurs.

The number of paper feed pulses to be sent to the drive circuits and the dot row count that resets the row counter both depend on the paper advancement performed.

Paper is advanced by the following actions:

1. Advanced to the next dot row within a character line (in Print State operation).

2. Advanced from the last printed row of a character line to the top row of the next character line.

3. Advanced or slewed through one or more character lines without printing because of a line feed or skip over perforation.

4. Slewed to the Top-of-Form.

5. Advanced or slewed under EVFU control.

2.0 THEORY OF OPERATION

2.13 PAPER FEED STATE (Continued)

Paper advancement is explained in detail in the next sections. Although paper feed to the next dot row occurs during the Print State, it is included here to group all the paper movements together.

2.14 PAPER FEED TO THE NEXT DOT ROW

During the Print State, paper is advanced to the next row within the character line when NEMOV (Early Paper Move) goes low. NEMOV is generated by dot column logic; two events occur (Figure 2-22):

1. Paper Feed pulse PF1 is generated.

2. The velocity counter begins counting S5 pulses, each 16 microseconds in duration.

The count of S5 pulses accumulates in the velocity counter. When the count reaches 182, the velocity counter is reset, and Paper Feed pulse PF2 is generated, advancing the paper one dot row.

The printer remains in the Print State until the last dot row of the characters has been printed. The EOL terminates the Print State and initiates the Paper Feed State.

2.15 PAPER FEED TO THE NEXT CHARACTER LINE

Twelve dot rows exist from the first dot row of one character line to the first dot row of the next (nine rows for 8 lpi spacing). Paper is always moved by dot rows. The dot row counter keeps track of paper position whenever paper is moved.

When the Paper Feed State (PPF) flip-flop is set by EOP, the count enable flip-flop (Figure 2-22) is set to enable the step counter. The step counter counts Row Clock (RCLK) pulses and addresses the velocity PROM that contains the number of steps in the acceleration and deceleration profiles (Figure 2-23).

As the count of RCLK pulses increments to 12 (nine at 8 lpi), each count selects the rate at which Paper Feed pulses are generated during the next dot row period. The velocity counter (Figure 2-22) counts the 16 microsecond S5 pulses and applies a binary coded address to the velocity PROM. The addressed velocity PROM contents determine the rate at which Paper Feed pulses are generated during the current period.

2.0 THEORY OF OPERATION

2.15 PAPER FEED TO THE NEXT CHARACTER LINE (Continued)

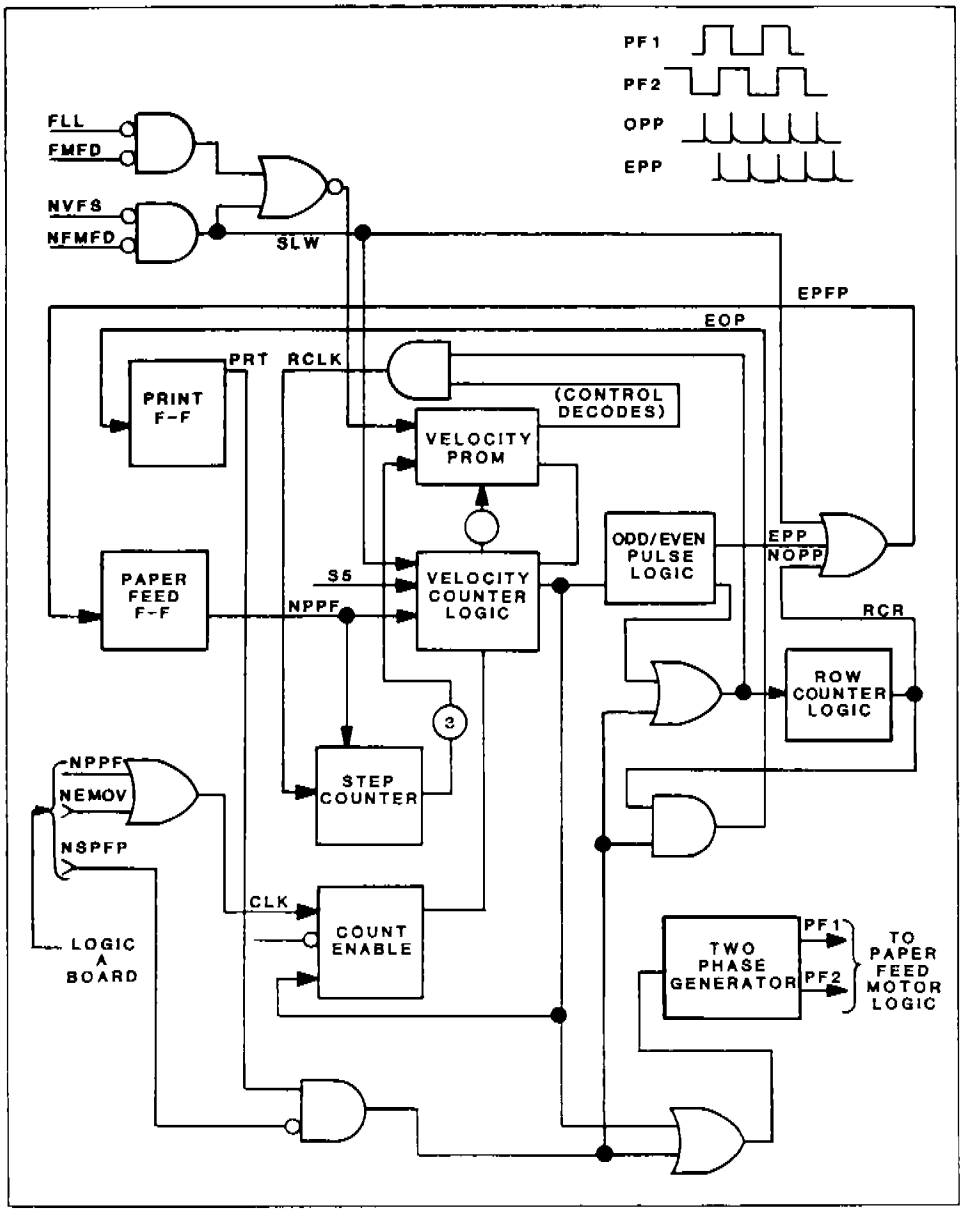

FIGURE 2-22.
PAPER FEED LOGIC BLOCK DIAGRAM

2.0 THEORY OF OPERATION

2.15 PAPER FEED TO THE NEXT CHARACTER LINE (Continued)

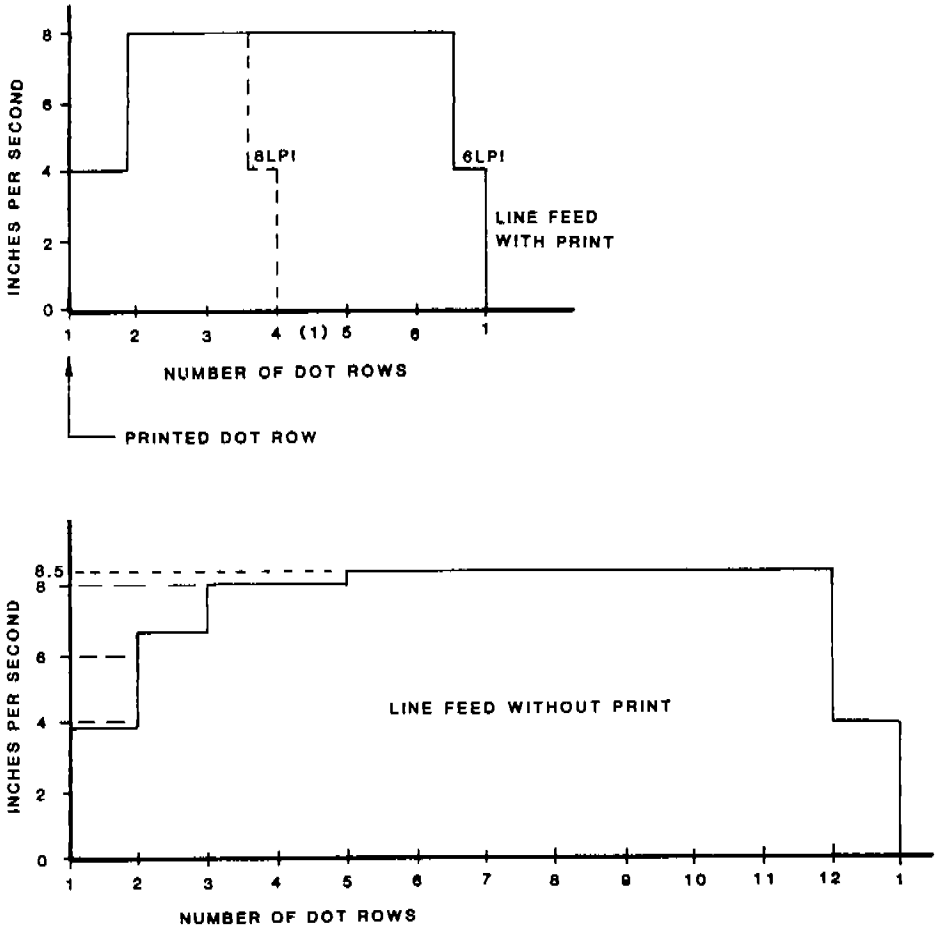

FIGURE 2-23.
LINE FEED OPERATION VELOCITY PROFILE

2.0 THEORY OF OPERATION

2.15 PAPER FEED TO THE NEXT CHARACTER LINE (Continued)

Each time the velocity counter logic decodes the programmed paper feed interval, the logic output resets the velocity counter (enabling a new count) and clocks the two phase logic. This logic generates two outputs (PF1 and PF2) with alternate clocks from velocity counter logic. PF1 and PF2 control paper feed motor control circuits. Each PF1-PF2 pair advances the paper one dot row.

Odd/even logic produces Odd Paper Pulses (NOPP) and Even Paper Pulses (EPP). Each set of pulses occurs at one half the Paper Feed (PF) pulse rate. NOPP clocks the row counter, while EPP is ANDed with RCR (Row Counter Reset). As the last dot row of the line is counted, EPFP (End Paper Feed Pulse) is generated and the paper feed operation is completed. EPFP resets the PPF flip-flop, which puts the printer in the Load Buffer state, ready to accept the next line of data from the host computer.

The number of NOPP pulses required to generate RCR depends on the inputs to the row counter decoder logic. This input is determined by the selected line spacing as follows.

12 pulses @ 6 lpi
9 pulses @ 8 lpi
8 pulses @ 9 lpi
7 pulses @ 10 lpi

Paper advance distance from the last printed dot row of one character line to the first dot row of the next character line is six dot rows at 6 lpi (three dot rows at 8 lpi), unless the printed line has underlines or descenders. If the character line has no printable characters, the paper moves 12 dot rows. The timing of a typical Load Buffer/Print/Paper Feed sequence for one character line is shown in Figure 2-24.

The remaining theory in this section provides expanded coverage of paper feed, plus the EVFU, the paper transport, the ribbon transport, and the power supply.

2.0 THEORY OF OPERATION

2.15 PAPER FEED TO THE NEXT CHARACTER LINE (Continued)

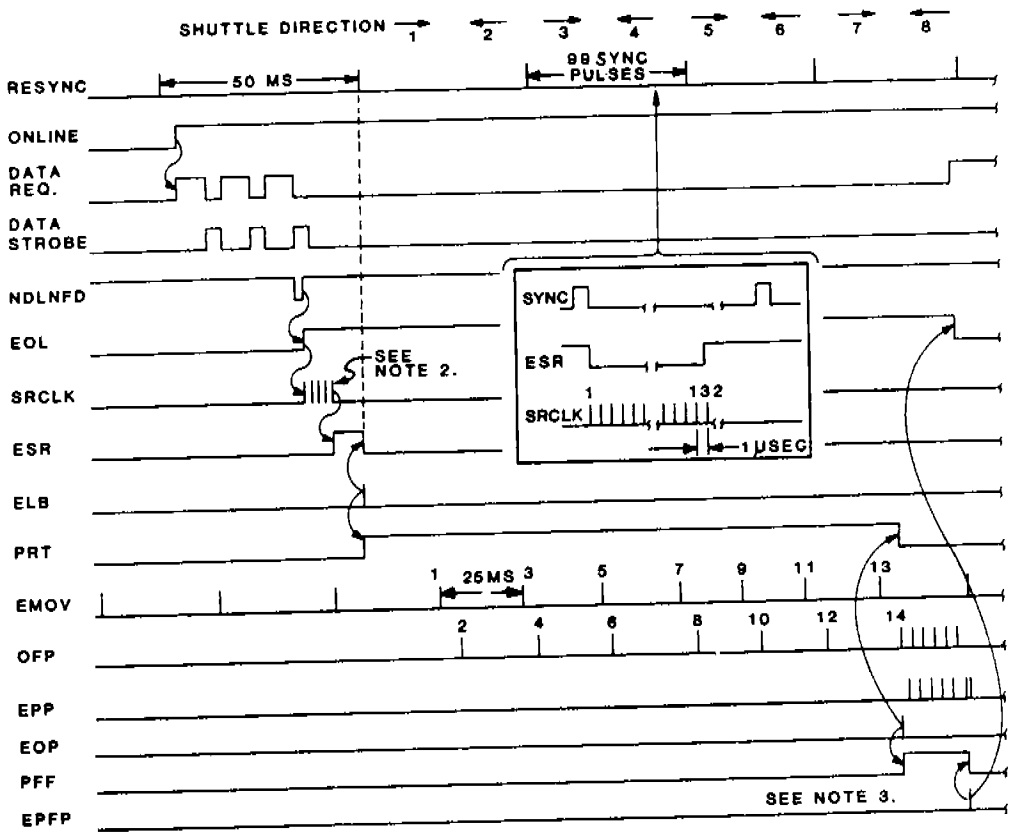

1. ALL DATA CHARACTERS AND A CONTROL CHARACTER MUST HAVE BEEN RECEIVED DURING THIS TIME FOR THE PRINTER TO OPERATE AT 300 LPM.
2. NO. OF PULSES ON SRCLK AT THIS TIME IS 132-(NO. OF PRINT CHARACTERS SENT).
3. PAPER FEED PULSES ARE CONTROLLED BY PROM OUTPUT FUNCTIONS AS WELL AS LOGIC GATING.

FIGURE 2-24.
TIMING SEQUENCE FOR PRINTING ONE CHARACTER LINE

2.0 THEORY OF OPERATION

2.16 SKIP OVER PERFORATION

For an 11 inch form, the row counter in Top-of-Form logic always counts up to 792 rows (11 x 72), whether or not a Top-of-Form operation has been initiated. The count is always with respect to the physical Top-of-Form, provided the paper supply is set properly at the Top-of-Form when it is loaded and not changed during power interruptions.

The printer may be configured to skip over the perforation, causing paper to advance automatically a preset distance in advance of the bottom of the form. Thus, printing ends before the bottom of the form and resumes after the top of the next form.

The selectable skip over distances are 1/2", 2/3", 5/6" and 1". The distance skipped for a given configuration will be precise, regardless of the setting of the printer line spacing.

The skip over distance is selected by installing jumpers W1, W2, and W3 (Figure 2-25) on the Logic B PCBA. (Refer to the P-Series User's Reference Manual for instructions on Skip Over Performation Length Select.)

2.17 PAPER FEED TO THE TOP-OF-FORM

The Top-of-Form logic (Figure 2-25) always maintains an accumulated count of dot rows and lines printed since the start of printing. If a Top-of-Form command is received, this logic controls the high speed movement of paper to the top of the next form.

The Top-of-Form command originates either at the TOP OF FORM pushbutton (STOF) or at the printer command decoder (NDFMFD). The resulting NTOF signal sets the FMFD flip-flop in Top-of-Form Logic. As NFMFD goes through, it generates the Slew (NSLW) signal that holds off the End of Paper Feed Pulse (EPFP) and modifies the address applied to the velocity PROM in the paper feed velocity counter logic. As shown in Figure 2-26, velocity counter logic then generates pulses at a rate that drives paper briefly at 5 IPS. The step counter and velocity counter in the velocity counter logic then cause paper movement to accelerate in stages up to approximately 8.5 IPS during the next 12 row counts. That velocity is maintained until the next to last line of the form is detected (FLL). FLL causes the velocity PROM and velocity counter logic to generate paper feed pulses at a lower rate until paper movement stops following the last line of the form.

2.0 THEORY OF OPERATION

2.17 PAPER FEED TO TOP-OF-FORM (Continued)

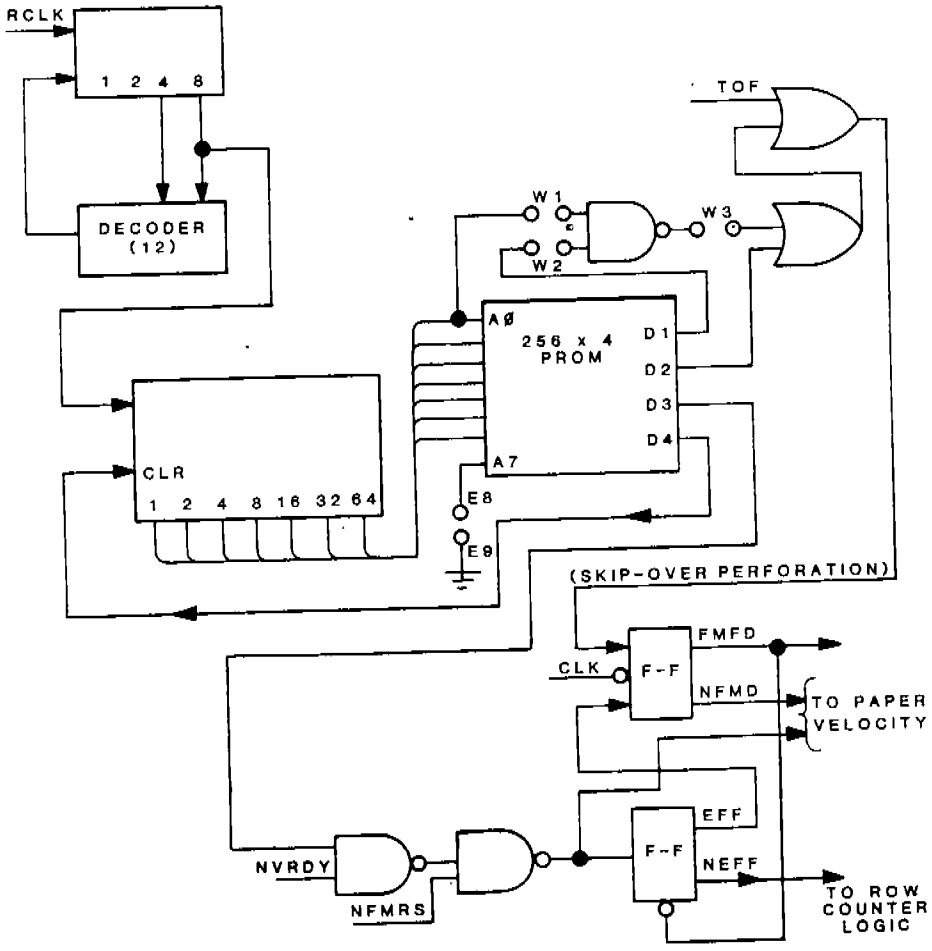

FIGURE 2-25.
TOP-OF-FORM COUNTER FUNCTIONAL BLOCK DIAGRAM

2.0 THEORY OF OPERATION

2.17 PAPER FEED TO THE TOP-OF-FORM (Continued)

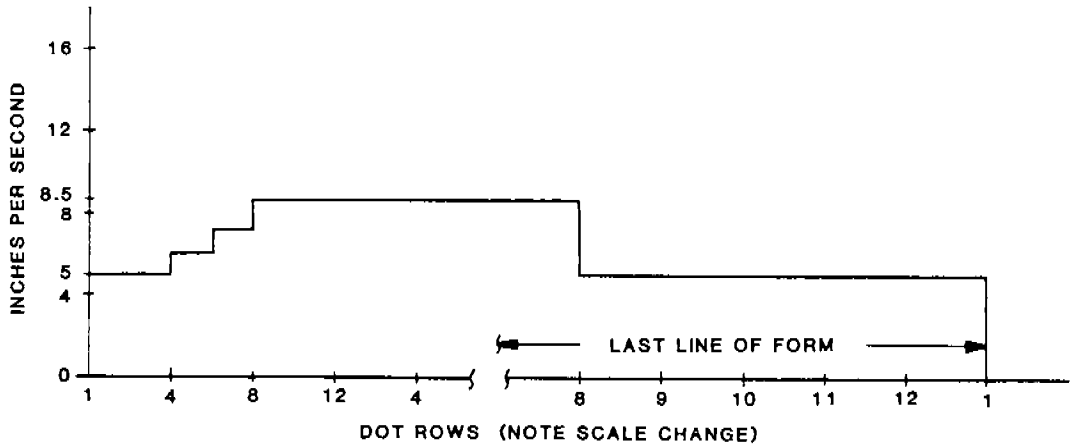

FIGURE 2-26.
TOP-OF-FORM SLEWING VELOCITY PROFILE

Two counters in Top-of-Form logic keep a count of dot rows from the top of one form to the top of the next. The maximum form length is normally 792 rows. The row clock counter counts RCLK pulses. Twelve rows prior to the end of form, FLL is generated from the Top-of-Form PROM, which modifies the velocity PROM address, clocks NEFF (End Form Feed), and resets the FMFD flip-flop (turning off NSLW). NEFF simulates the final row count and sets Row Counter Reset (RCR), which produces EPFP. EPFP resets the PPF flip-flop to end the Paper Feed State and initiates the Load Buffer State.

The final RCLK pulse increments the line counter to 66, clearing the line counter so that it is ready to begin the next form.

Timing for a typical Top-of-Form operation is shown in Figure 2-27.

2.0 THEORY OF OPERATION

2.17 PAPER FEED TO THE TOP-OF-FORM (Continued)

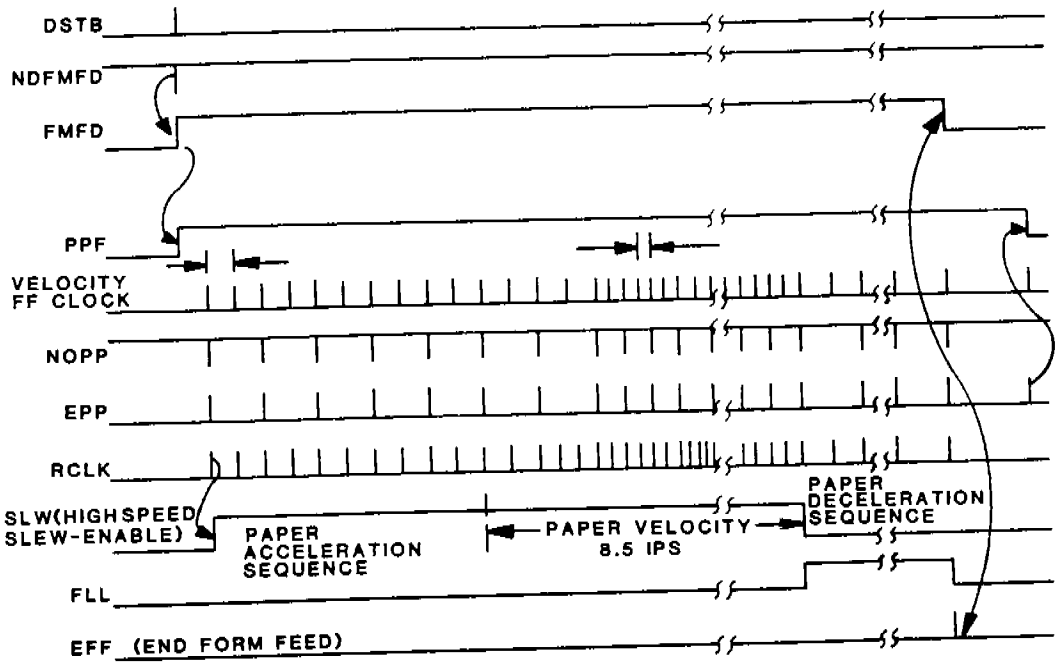

NOTES:
1. FOR A STANDARD 11-INCH FORM THERE ARE 792 RCLK PULSES PER PAGE.
2. BUFFER CONTAINS NO PRINTABLE CHARACTERS.

FIGURE 2-27.
PAPER FEED TO TOP-OF-FORM

2.18 ELECTRONIC VERTICAL FORMAT UNIT

The Electronic Vertical Format Unit (EVFU) is a software controlled vertical formatter. It is loaded and operated by the host computer without operator intervention. When the EVFU is loaded, it disables Perforation Skip Over and Forms Length. Paper Instruction (PI) is required to be present.

2.0 THEORY OF OPERATION

2.18 ELECTRONIC VERTICAL FORMAT UNIT (Continued)

In systems not providing the logical PI signal at the interface, a program code may be used to perform the PI function following these conditions:

1. Jumper W5 on the Logic A PCBA must be installed.

2. Data bit DB5 must be high.

3. Data bits DB6 and DB7 must be low.

NOTE: Binary Count operation is not available under these conditions.

The EVFU can be disabled by connecting jumper W7 in location 12C on the Logic B PCBA. Jumper W7 disables NSPI (Paper Instruction Strobe) so that the EVFU cannot operate.

Use of the EVFU to define print lines on a form increases system efficiency by allowing the printer to slew paper to a predetermined line with a single command. There are three modes of EVFU operation available:

1. Programming the EVFU memory

2. Slewing to a specified line

3. Slewing a specified number of lines

2.19 PROGRAMMING THE EVFU MEMORY

The EVFU memory is a 4-bit RAM (Figure 2-28) that stores up to 132 channel commands, each numbered within a range of Channel 1 to Channel 14. The memory is programmed in three steps:

1. A Start Load command (NSTL) is applied to the EVFU Load flip-flop. The flip-flop is clocked by NSPI (Paper Instruction Strobe), DSTB and PI. This combination asserts LD (Load EVFU). LD clears EVFU control logic and enables the EVFU memory to be loaded.

2. EVFU program information is transmitted to the printer on interface data lines DB1 through DB4. The data is loaded into the interface data latches and then into the EVFU memory by NSPI. At the same time, the Memory Address Counter and the Forms Length Counter are incremented. This process is repeated until the last channel command has been loaded.

3. After the last channel command has been loaded, an End Load command is applied to the Load flip-flop. The flip-flop is clocked by NSPI (Figure 2-29) and resets. The EVFU memory is disabled from further loading. The Forms Length Counter stops incrementing immediately.

2.0 THEORY OF OPERATION

2.19 PROGRAMMING THE EVFU MEMORY (Continued)

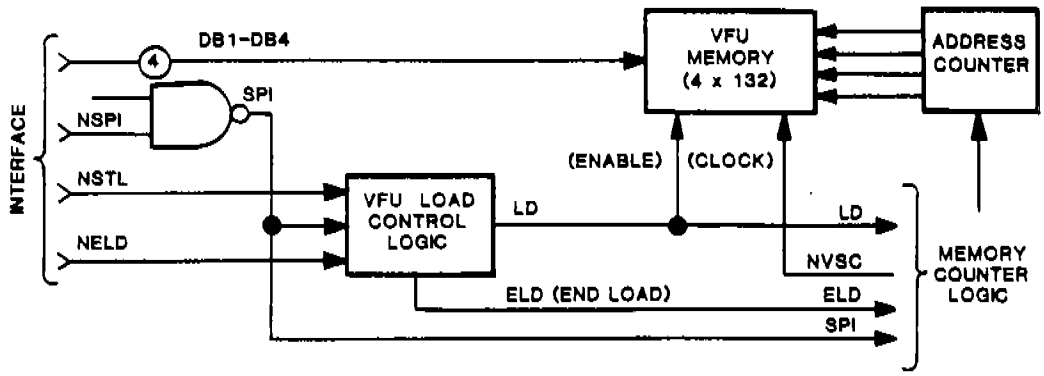

FIGURE 2-28.
EVFU LOADING FUNCTIONAL BLOCK DIAGRAM

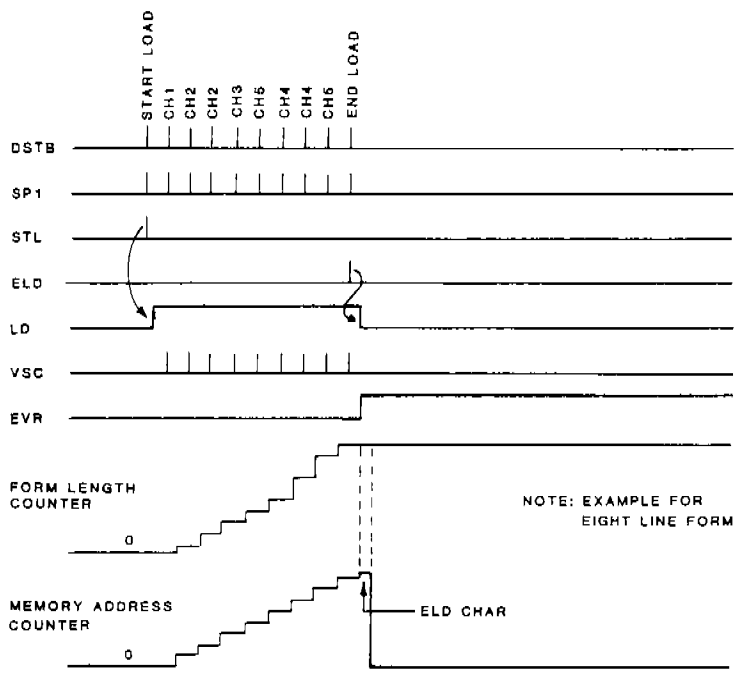

FIGURE 2-29.
EVFU LOADING SEQUENCE TIMING DIAGRAM

2.0 THEORY OF OPERATION

2.20 CHANNEL SEEK OPERATION

During the printing of a form one or more Channel Seek operations may be performed to locate specific lines on the form (Figure 2-30). A Channel Seek operation will occur with following conditions:

1. The channel number code must be entered on data lines DB1 through DB4.

2. The required channel number must be already loaded in the EVFU memory.

3. The Paper Instruction line (PI) must be high. This may be either a decoded word from the program or the logical line from a Dataproducts interface. The resulting NSPI signal (Figure 2-28) loads the 4 bit code into the data latches and sets the Vertical Format Slew signal (VFS). This signal causes paper feed logic to start paper movement as a Form Feed operation.

As paper advances through each line space, the row count recycles. This generates NDLC (Delayed Line Clock). NDLC appears at the VSC line. As a result, the contents of the EVFU memory are stepped one address position for each line of paper feed. The contents then appear at a comparator.

When the output of the EVFU memory matches the number in the data latches, both the data latches and the VFU flip-flop are reset, stopping paper movement and ending the EVFU sequence.

Each time the EVFU memory is incremented, the Memory Address Counter is incremented. When the count in the Memory Address Counter equals that in the Forms Length Counter, the Memory Address Counter is reset.

The velocity profile produced by paper feed control logic during Channel Seek operation is shown in Figure 2-31. The VFS signal generated by the EVFU configures the logic to generate this profile.

2.0 THEORY OF OPERATION

2.20 CHANNEL SEEK OPERATION (Continued)

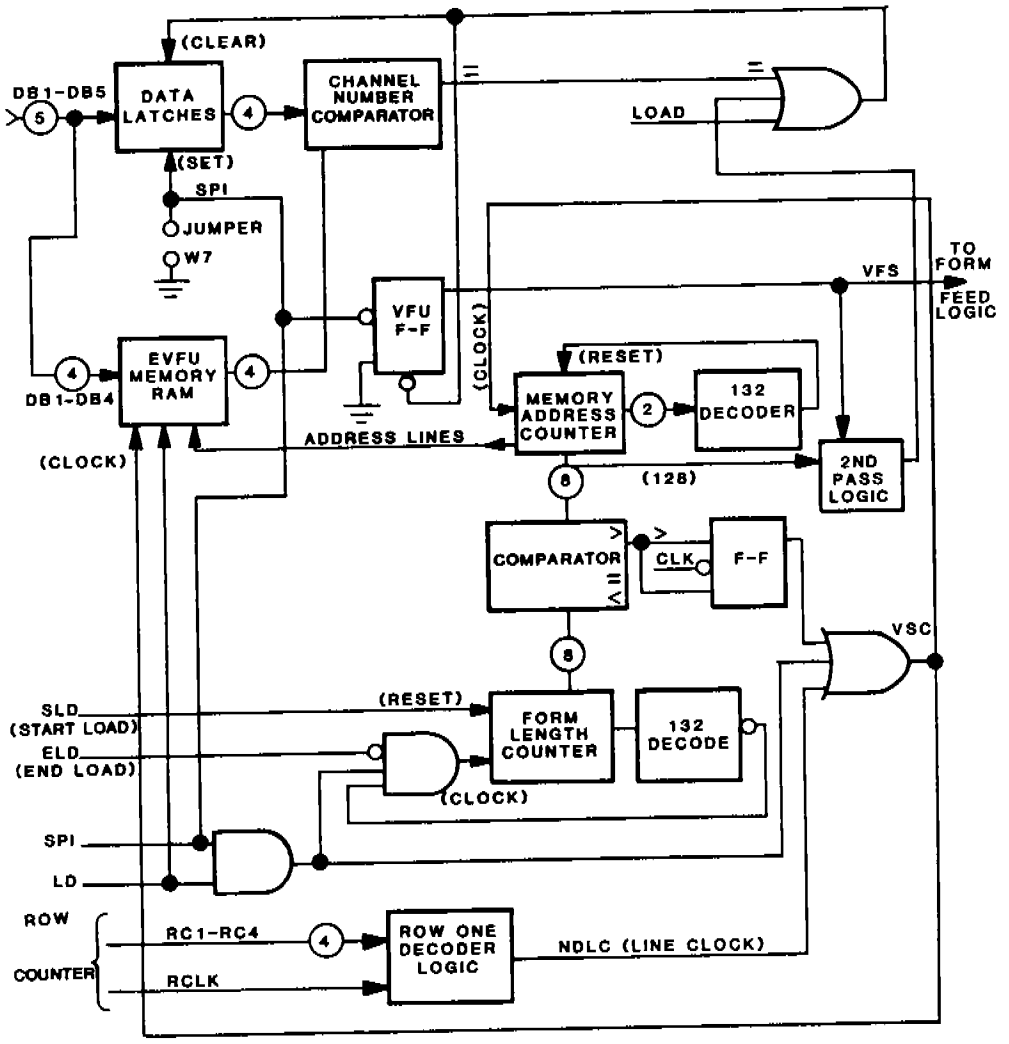

FIGURE 2-30.
EVFU CHANNEL SEEK FUNCTIONAL BLOCK DIAGRAM

2.0 THEORY OF OPERATION

2.20 CHANNEL SEEK OPERATION (Continued)

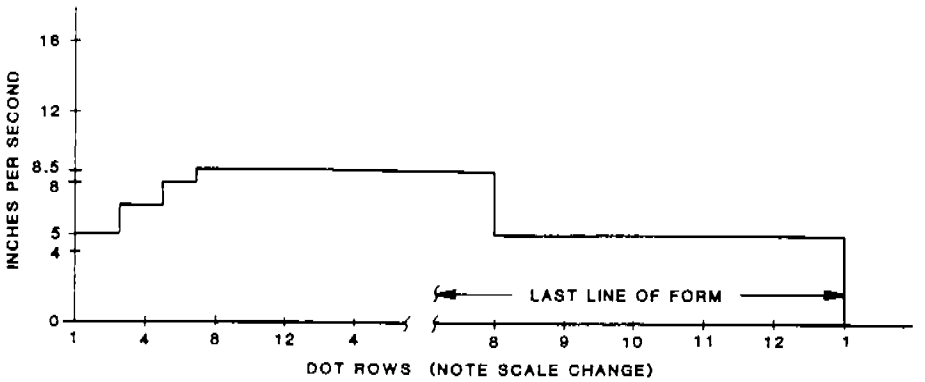

FIGURE 2-31.
EVFU CHANNEL SEEK VELOCITY PROFILE

2.21 VERTICAL TAB OPERATION

The EVFU may be operated by a programmed VT code (0BH), which generates NDVT (Vertical Tab). If memory has been loaded, a search is begun for channel 12. The EVFU slews paper until channel 12 is found in the EVFU memory. If the EVFU memory has not been loaded, a single line feed results.

2.22 BINARY COUNT OPERATION (Slew Relative Mode)

In the Binary Count operation, the program may request that paper be slewed a specified number of lines (1 to 16) from the current position. Although this function is controlled by the EVFU, it is not necessary that the EVFU be loaded.

Conditions for this mode of operation are:

1. Data bit DB5 must be high to generate BC (Binary Count).

2. Data bits DB1 through DB4 encode the number of lines to be slewed.

3. The PI line must be high.

The logic that controls the Binary Count mode of operation is illustrated in Figure 2-32.

2.0 THEORY OF OPERATION

2.22 BINARY COUNT OPERATION (Slew Relative Mode) (Continued)

BC disables the Channel Seek comparator logic and enables the line count comparator. NSPI clocks the binary count into the data latches and sets the Vertical Format Slew (VFS) flip-flop, causing paper feed logic to start paper movement.

As paper advances, a line counter is incremented by Row Count Reset (RCR) pulses. Each RCR marks the last dot row of a line space. When the line count matches the number stored in the data latches, the comparator "equal" output resets both data latches and the VFS flip-flop via a logic gate, stopping further paper movement.

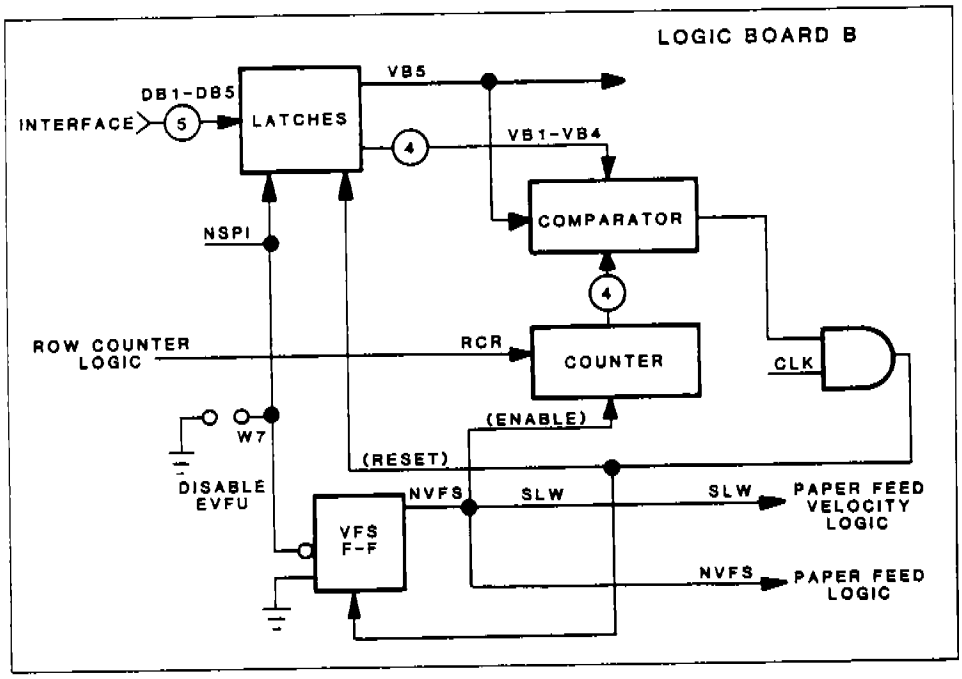

FIGURE 2-32.
EVFU IN BINARY COUNT MODE

2.0 THEORY OF OPERATION

2.23 RUNAWAY PAPER FAULT PROTECTION

The EVFU protects the printer from paper runaway resulting from either of the following programming faults (refer to Figure 2-32):

1. The EVFU is commanded to seek a channel but the EVFU memory has not been loaded. The paper advances one line, the VFS flip-flop is reset, and further paper movement is stopped.

2. The EVFU has been loaded but the required channel code does not exist in memory. The paper advances as the EVFU searches all memory locations for the non-existant code. When the next memory search reaches a count of 12B, "2nd pass" logic simulates an "equals" condition in the comparator. This resets the VFS flip-flop and stops further paper movement.

2.24 PAPER TRANSPORT

The paper transport (Figure 2-33) moves fan-folded, edge perforated paper up to 16 inches wide. Paper position is controlled by two movable tractors utilizing 8 pin paper engagement. Only the right tractor is movable over the full width of the hammerbank. A horizontal vernier permits paper position adjustment laterally over a range of two character spaces.

Paper is advanced by a motor in 0.0139 inch increments for each dot row within the character. Paper advance responds to:

1. Decoded Line Feed (NDLNFD)

2. Decoded Form Feed (NDFMFD)

3. EVFU commands

4. Pressing the TOP OF FORM or PAPER ADVANCE pushbuttons on the control panel

A paper out switch and a paper motion detector monitor paper transport action. The paper out switch interrupts printer operation and turns on the CHECK indicator for either of two events:

1. No paper detected two inches below the print station (the printer is out of paper).

2. The Forms Thickness Adjustment lever is in the Load position (paper is not being held correctly at the print station).

2.0 THEORY OF OPERATION

2.24 PAPER TRANSPORT (Continued)

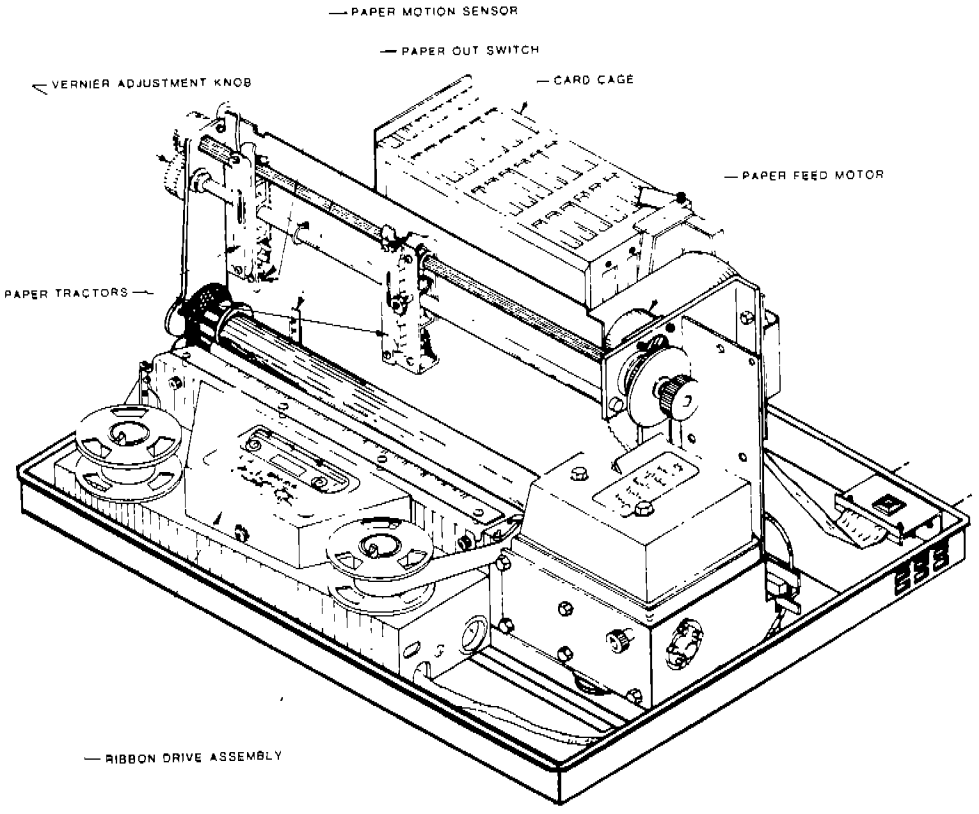

FIGURE 2-33.
PAPER TRANSPORT COMPONENTS

The paper out switch is held open by normal paper tension below the print station. The paper out detector circuit turns on the CHECK indicator when the end of paper is reached. The printer is allowed to operate until paper has advanced two inches past the detector. The detector circuit may be jumpered so that paper advancement stops immediately.

The paper motion sensor detects movement of the sprocket holes near the left edge of the paper and is mounted on the left tractor. It interrupts the printing cycle if paper has become jammed at the platen or has been pulled out of the paper tractors. Either condition turns on the CHECK indicator.

2.0 THEORY OF OPERATION

2.25 PAPER OUT SWITCH LOGIC

This logic detects the condition of no paper at the print station (paper out) or if the operator has left the Forms Thickness Adjustment lever in the Load position.

Either condition is sensed by the paper out switch which is mounted on the belt cover. The switch is held in the closed position either by the pressure of the open platen against the switch mounting arm or by lack of pressure from taut paper against the actuating arm. Either condition causes the CHECK indicator to light and printer operation to stop.

When the switch is closed, NFLT goes high and the troubleshooting "paper out" LED on the Power Supply PCBA lights. NFLT begins to count TFLC (Top-of-Form Line Counter) pulses, each representing twelve dot rows.

The paper out switch is mounted approximately two inches (12 line spaces at 6 lpi) below the print station. Therefore, when the counter has counted 12 TFLC pulses the Ready signal (RDY) goes low, (inhibiting further input to the printer) and the CHECK lamp lights.

The paper out fault is cleared by closing the platen or loading paper in the printer.

Note that this fault, as well as a paper motion fault, is recognized only when the printer enters the Load Buffer State.

2.26 PAPER MOTION DETECTION LOGIC

This logic detects the condition where the paper tractors are driven but there is no paper motion. Paper movement is detected using an LED emitter/phototransistor sensor which looks at the paper in the line of sprocket holes. When paper is in front of the sensor, reflected light causes the sensor output to go high. When the sensor sees a sprocket hole, the sensor output goes low.

Paper motion detector circuits check the sensor output every 8 character lines in 6 lpi operation. If the sensor output has not changed from high to low during this interval, the paper motion flip-flop is set, READY is negated (inhibiting further data transfer to the printer) and the CHECK indicator is turned on. Because there are two sprocket holes in every eight line intervals on the paper, the logic has two chances to detect a fault during that interval.

2.0 THEORY OF OPERATION

2.26 PAPER MOTION DETECTION LOGIC (Continued)

Paper motion detector logic is illustrated in Figure 2-34. The sensor is connected to a tone encoder circuit on the Power Supply PCBA. This circuit uses a phase locked loop generating a frequency which lights the LED in the sensor. When paper reflects the LED emitted light to the sensor, its output is a signal at the oscillator frequency, causing the output of the phase locked loop (PMD) to be true.

If, however, there is a sprocket hole in front of the sensor (emitted light is not reflected to the phototransistor), the sensor output is low and the loss of phase lock causes the PMD signal to become false.

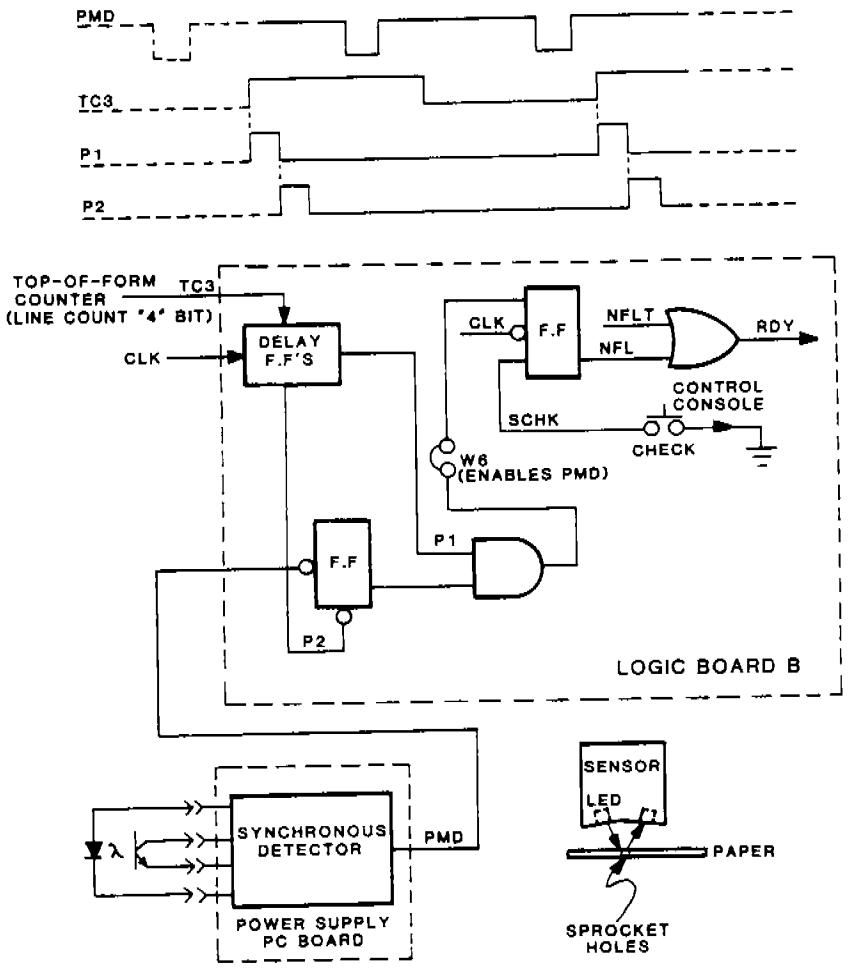

FIGURE 2-34.
PAPER MOTION DETECTOR FUNCTIONAL DIAGRAM

2.0 THEORY OF OPERATION

2.26 PAPER MOTION DETECTION LOGIC (Continued)

Circuits on the Logic B PCBA check the state of the PMD signal by comparing with signal TC3, which is stage 3 in the Top-of-Form counter. If the state of PMD has not changed within the 8 line interval (no sprocket hole has passed the sensor), RDY (Ready) is negated and the CHECK indicator is turned on. The fault is cleared by correcting the problem of jammed paper, and then pressing the CHECK switch on the console. When certain colored forms are used, the lower reflectivity of the paper surface may cause an occasional false paper motion fault. This paper motion fault may be defeated by removing jumper W6 (location 8K) on the Logic B PCBA.

2.27 PAPER FEED CONTROL CIRCUITS

The paper feed motor contains two pairs of coils. The coil pairs are driven in a sequence; the electromagnetic detent locking the rotor is released, the rotor is advanced one increment, and the detent is set again. One pair of coils is driven by push-pull signal PFM1/PFM2 and the other pair is driven by PFM3/PFM4 (Figure 2-35).

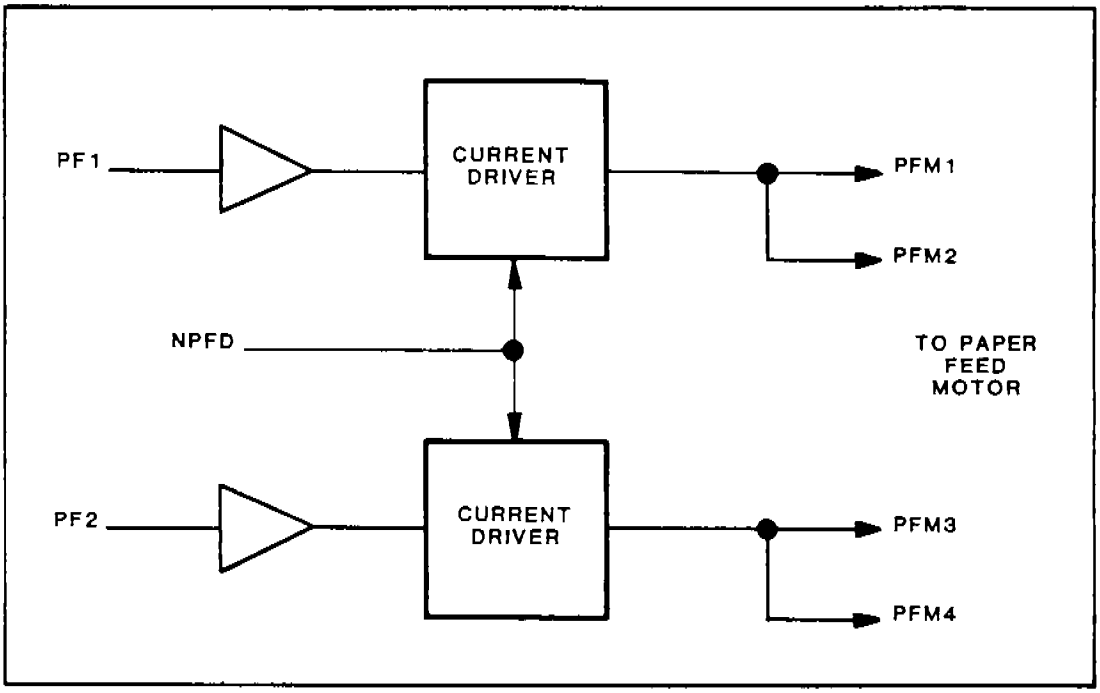

FIGURE 2-35.
PAPER FEED CONTROL CIRCUIT FUNCTIONAL DIAGRAM

2.0 THEORY OF OPERATION

2.27 PAPER FEED CONTROL CIRCUITS (Continued)

The drive signals are controlled by the 2 phase Paper Feed signals PF1 and PF2 generated in paper feed logic. Each pair of PF1/PF2 pulses increments the motor one step to advance paper one dot row.

When paper is to be advanced to the next character line, the Top-of-Form, a Vertical Tab, or under EVFU control, the corresponding profile of paper movement velocity is selected from the Velocity PROM to obtain precise paper control. Paper is accelerated at a variable rate to optimize both speed and precision and decelerated at a variable rate that prevents overshoot. To achieve this modulated paper movement, paper feed logic generates PF1 and PF2 at a frequency regulated by addressed velocity PROM content.

PF1 and PF2 each drive identical independent control circuits. Either circuit operates when the PFn pulse passes through gates and drives a push-pull current amplifier circuit that provides drive current to one pair of motor coils.

2.28 RIBBON TRANSPORT

The Ribbon Drive Assembly contains two dc servomotors that move the ribbon continuously while there is shuttle action. One motor acts as the driver, drawing the ribbon against resistance exerted by the other motor. When a length of metal tape at either ribbon end is detected, the two motors exchange roles and ribbon travel is reversed. This system maintains a relatively constant ribbon speed and tension. Ribbon Drive Assembly circuits are shown in Figure 2-36.

Ribbon may be moved only while shuttle motion is taking place. The high side of the ac shuttle drive circuit (which also powers the hammerbank blower) is switched by a triac switching circuit controlled by signal NSD. The switching circuit consists of an opto-isolator device and a zero crossing detector circuit. The optical device isolates the control logic from the ac power circuit. The zero crossing detector prevents an excessive transient by switching the triac only when the ac voltage passes through zero volts.

Ribbon control circuits are shown in Figure 2-37. The NSD signal enables gates which control switching to the ribbon drive servo.

2.0 THEORY OF OPERATION

2.28 RIBBON TRANSPORT (Continued)

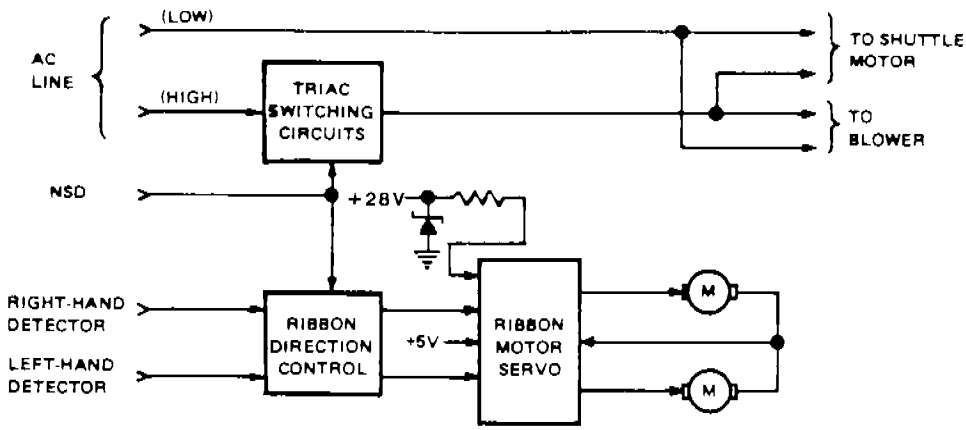

FIGURE 2-36.
RIBBON DRIVE ASSEMBLY FUNCTIONAL BLOCK DIAGRAM

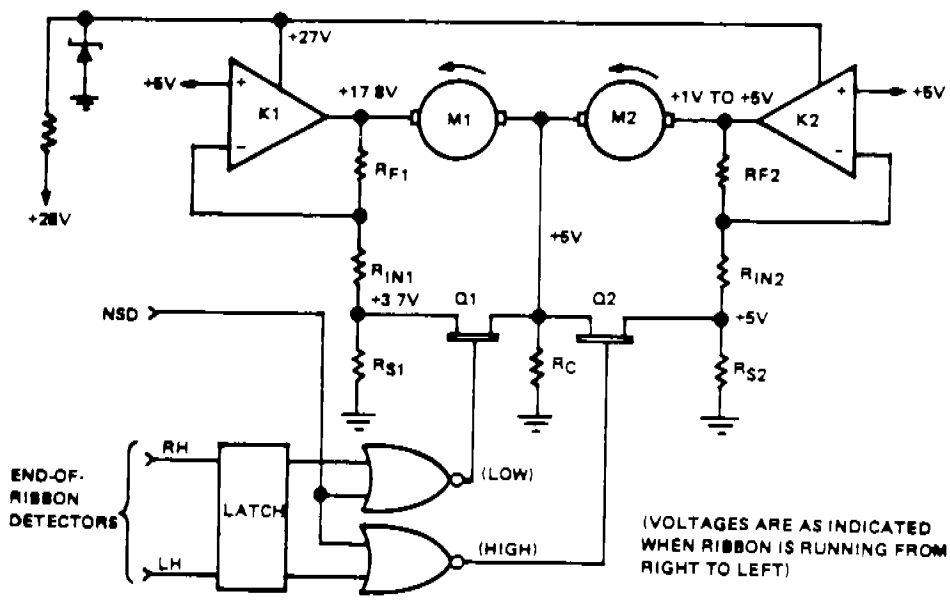

FIGURE 2-37.
RIBBON CONTROL PCBA SIMPLIFIED SCHEMATIC DIAGRAM

2.0 THEORY OF OPERATION

2.28 RIBBON TRANSPORT (Continued)

When an end of ribbon sensor is activated, the corresponding latch turns on the related FET. If, for example, the left sensor resets the latch FET Q1 acts as an open circuit and Q2 conducts, connecting the divider of Amp K2 to the upper end of the resistor Rc. This connects motor M1 as the driving motor, with drive current flowing through constant voltage amplifier K1, motor M1, and resistor Rc.

When the right end of the ribbon is detected, the latch is set to the opposite state and the motors again reverse roles.

When the shuttle motor is not running (NSD is high), both FETs are held off and the motors act in opposition, as the voltage across Rc provides feedback to resist ribbon movement.

2.29 POWER SUPPLY ASSEMBLY

The Power Supply Assembly consists of chassis mounted transformer/rectifier/filter circuits and the Power Supply PCBA. Ac line voltage is connected to the transformer at primary winding taps selected for the line voltage in use.

Secondary windings of the transformer provide power to rectifiers, regulators, and filters that generate the following input to the Power Supply PCBA:

Unfiltered +28 V – Regulated on the PCBA to provide +28 V to the Hammerbank drive circuits and the Paper Feed Control circuits through fuse F3.

+8 V – Applied through fuse F1 to the reference voltage circuit and the Logic +5 V Supply, both located on the PCBA.

-30 V – Applied to the Paper Feed Control Circuit through fuse F2.

PREVENTIVE AND CORRECTIVE MAINTENANCE

CONTENTS

General 3.1
Preventive Maintenance 3.2
Corrective Maintenance 3.3
Printer Cabinet 3.4
Printer Cover 3.5
Control Panel 3.6
Control Panel Switches 3.7
Indicator Lamps 3.8
Ribbon Drive Assembly 3.9
Ribbon Control PCBA 3.10
Ribbon Hubs and Guides 3.11
Ribbon Drive Motors 3.12
Ribbon Drive Assemby Blower 3.13
Printing Mechanism 3.14
Shuttle Assembly 3.15
Rotating the Hammerbank to the Service Position 3.16
Adjusting Platen to Hammer Tip Spacing 3.17
Shuttle Spring Force Adjustment 3.18
Hammer Springs 3.19
Hammer Coils 3.20
Paper Ironer 3.21
Counterweight Assembly 3.22
Flywheel Assembly 3.23
Cam Wick 3.24
Magnetic Pickup Assembly 3.25
Shuttle Motor 3.26
Shuttle Motor Pulley 3.27
Adapting the Printer for Line Frequency 3.28
Shuttle Belt 3.29
Paper Feed Mechanism 3.30
Paper Feed Belt 3.31
Paper Feed Motor 3.32
Paper Tractors 3.33
Paper Motion Sensor Assembly 3.34
Paper Out Detectors 3.35
Platen Open Switch 3.36
Power Supply Assembly 3.37
Replacing the DC Supply Fuses 3.38
Replacing the Power Supply PCBA 3.39
Replacing the Power Supply Assembly 3.40
Rear Cooling Fan 3.41
Card Cage PCBAs 3.42

PREVENTIVE AND CORRECTIVE MAINTENANCE

FIGURES

The P300 Printer	3-1
Printer Cabinet and Control Panel	3-2
Removing the Cabinet and PCBAs	3-3
The Ribbon Drive Assembly	3-4
Details of the Ribbon Drive Assembly	3-5
The Shuttle Assembly	3-6
Hammerbank in Service Position with Cover Assembly Removed	3-7
Shuttle Assembly Service Details	3-8
Flywheel Assembly and the Counterweight Assembly	3-9
Hammer Spring Servicing	3-10
Tweaking the Hammer Spring Externally	3-11
Removing the Hammer Coil Assembly	3-12
The Paper Ironer	3-13
Counterweight Assembly Details	3-14
Wick Assembly	3-15
Flywheel Assembly and MPU Assembly Details	3-16
Adjusting the MPU Assembly	3-17
MPU Waveforms	3-18
Dot Column Offset	3-19
Removing the Shuttle Motor	3-20
Removing the Paper Feed Motor	3-21
Adjusting the Paper Feed Belt	3-22
Paper Transport Details	3-23
Servicing the Paper Tractors	3-24
Removing the Paper Out Switch	3-25
Adjusting the Paper Out Switch	3-26
Power Supply Assembly Details	3-27

TABLE

Recommended Tools and Test Equipment	3-1

3.0 PREVENTIVE AND CORRECTIVE MAINTENANCE

3.1 GENERAL

Section Three provides P300 Printer preventive and corrective maintenance procedures. The information is arranged by assemblies, with related procedures grouped together. Figure 3-1 shows printer subassemblies.

Recommended tools and test equipment are listed in Table 3-1. The hammer tip alignment tool, the Exerciser, and the extender PCB are available from Printronix. The remaining items are commercially available; equipment items may be substituted.

● WARNING ●

UNLESS OTHERWISE SPECIFIED, ALL PROCEDURES IN THIS SECTION MUST BE PERFORMED WITH POWER DISCONNECTED FROM THE PRINTER TO AVOID THE POSSIBILITY OF INJURY TO PERSONNEL OR DAMAGE TO THE EQUIPMENT.

3.0 PREVENTIVE AND CORRECTIVE MAINTENANCE

3.1 GENERAL (Continued)

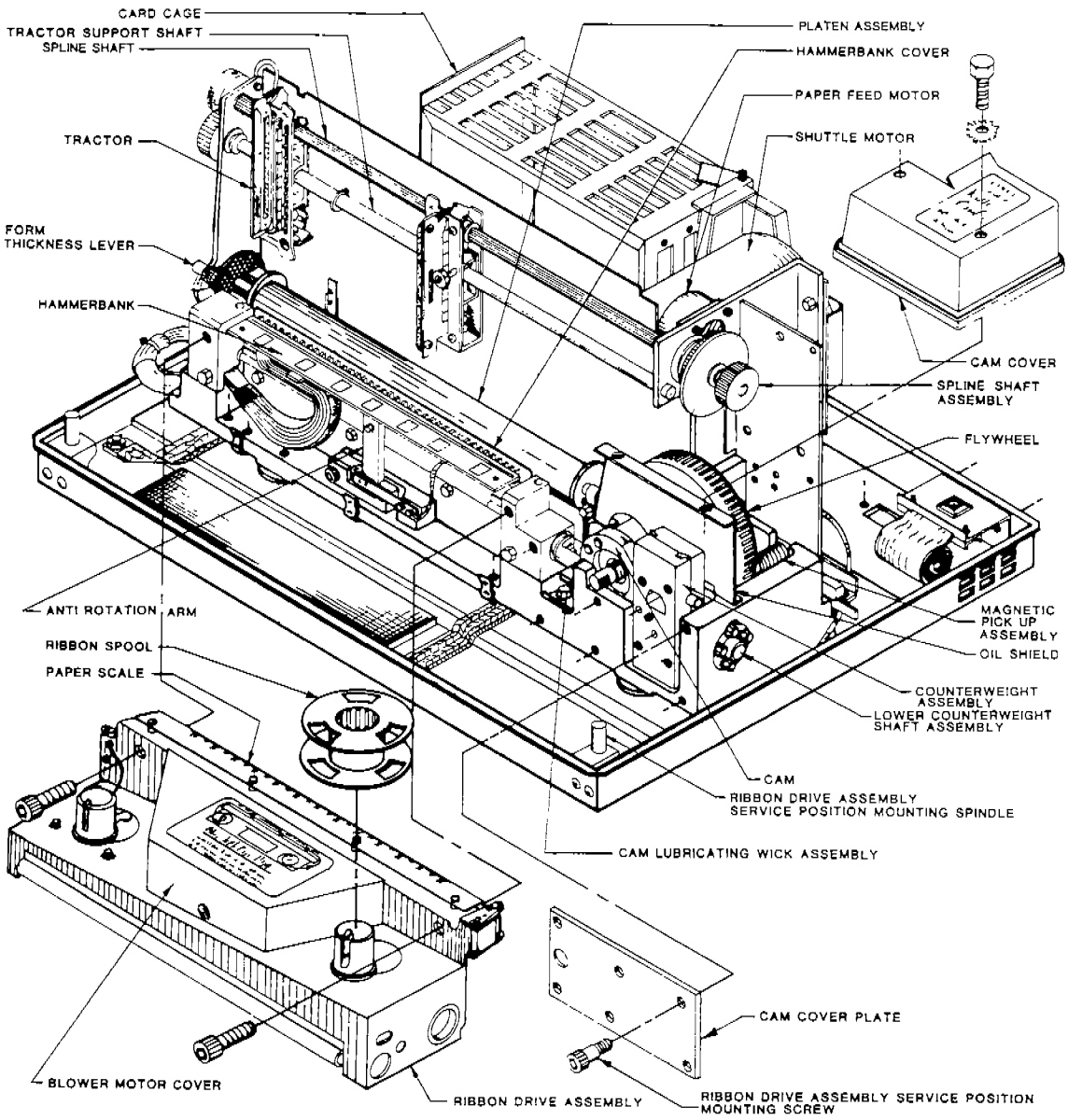

FIGURE 3-1.
THE P300 PRINTER

3.0 PREVENTIVE AND CORRECTIVE MAINTENANCE

3.1 GENERAL (Continued)

TABLE 3-1.
RECOMMENDED TOOLS AND TEST EQUIPMENT

ITEM	PRINTRONIX PART NO.	MANUFACTURER'S SUGGESTED PART NO.
Hammer Tip Alignment Tool - Steel Tip	102393-001	
Hammer Tip Alignment Tool - Carbide Tip	102393-002	P300
Hammer Tip Alignment Tool - (Short)	103085-001	P300
Exerciser	101635-001	-
Exerciser Cable, Dataproducts	101491-001	-
Exerciser Cable, Centronics	101507-001	-
Extender, PCBA	101250-001	-
Screwdriver, Torque, 12-36 in. lbs. adjustable	-	Utica TS35
Screwdriver, Torque, Adapter	-	Utica HW-18
Screwdriver, Torque, HEX Socket 3/16"	-	Utica W-8
Screwdriver, Torque, HEX Adapter 3/32"	-	Utica HW-4
Screwdriver, Torque, HEX Adapter 5/32"	-	Utica HW-6
Crescent Wrench	-	Utica 91-4C
Screwdriver, Allen HEX	-	Xcelite 99PS40
Screwdriver, Phillips	-	Xcelite X100
Screwdriver, Phillips	-	Xcelite X102
Screwdriver, Slot	-	Xcelite A184
Screwdriver, Slot	-	Xcelite R3164
Nut Driver Set	-	Xcelite PS120
Diagonal Cutters	-	Erem 91EH
Pliers, Chain Nose	-	Erem 11DH
Rule, Steel 6"	-	General 616
Feeler Gauge Set	-	Pronto 000AA
Pliers, Grip Ring	-	Truarc 1120
Tool, Lamp Removal	102386-001	
Soldering Iron and Tips	-	-
Ratchet, 3/8" Drive	-	-
Extension, 3", 3/8 Drive	-	-
Socket 7/16", 3/8 Drive	-	-
X-acto Knife and Blades	-	-
Digital Voltmeter	-	-
Oscilloscope and Probes (35 MHz or better)	-	-
Kimwipes	-	-
Adhesive	-	Eastman 910
Lubricating Oil, SAE 20 or equivalent	-	-
Isopropyl Alcohol	-	-

3.0 PREVENTIVE AND CORRECTIVE MAINTENANCE

3.2 PREVENTIVE MAINTENANCE

Preventive maintenance consists of periodic printer cleaning and lubrication, print quality tests, visual inspection of assemblies, and a check of paper feed belt and the shuttle belt tension.

The P300 printer should be cleaned at regular intervals to maintain print quality and operating efficiency. Special cleaning may be required at the following points:

- Shuttle Assembly
- Hammerbank Cover Assembly
- Hammer Tips and Coils
- Magnetic Pickup Unit
- Ribbon Guide Assemblies
- Paper Motion Sensor Assembly
- Ribbon Deck Assembly Blower
- Adjustable Tractors

Individual cleaning instructions are provided in this section.

Two locations in the P300 Printer require lubrication: the cam wick and the cam follower. Do not over lubricate either; trouble free operation and maintenance are better assured by less oil rather than more. Section 3.22 details the lubrication procedure.

Print quality tests detect the need for hammer spring adjustment and alignment and for MPU phasing adjustment. In addition to the performance tests in Section 4.9, Plot Mode should be run.

Preventive maintenance procedures should be performed every six months or at the end of every 500 hours of operation. Depending on use and operating environment, more or less frequent maintenance may be required to maintain the operating efficiency of the printer.

3.0 PREVENTIVE AND CORRECTIVE MAINTENANCE

3.3 CORRECTIVE MAINTENANCE

Corrective maintenance of the P300 Printer includes alignment, adjustment, assembly removal and replacement.

Alignment and adjustment include:

- ◊ Ribbon Drive Assembly Paper Scale Adjustment
- ◊ Hammer Spring Alignment
- ◊ Magnetic Pickup Adjustment
- ◊ Paper Feed Belt Alignment
- ◊ Paper Feed Belt Tension Adjustment
- ◊ Tractor Skew Alignment
- ◊ Paper Ironer Adjustment
- ◊ Hammer Tip to Platen Gap Adjustment
- ◊ Platen Adjustments
- ◊ Ribbon Guide Assembly Adjustment

3.4 PRINTER CABINET

The Printer cabinet (Figure 3-2) consists of a cabinet base with a removable cover. A hinged front cover allows access for interior cleaning by the operator. The Control Panel PCBA is mounted on the inside of the hinged front cover.

Clean the printer at regular intervals to prevent the buildup of paper dust, chaff, ribbon lint, and ink that may interfere with its operation.

- **CLEANING THE EXTERIOR**
  Clean the exterior of the printer using a soft cloth and a mild detergent. Do not use abrasive cleaners, particularly on the printer window.

- **CLEANING THE INTERIOR**
  To clean the interior of the printer, remove the power cord and proceed as follows:

  1. Open the front cover.

  2. Move the forms thickness lever to the load position (fully open).

  3. Remove the paper from the paper transport.

  4. Remove the ribbon spools from the ribbon hubs.

  5. Use a soft brush to dislodge paper dust and ribbon lint, then vacuum to remove. Give special attention to the tractors, the Hammerbank Assembly, and the base pan.

3.0 PREVENTIVE AND CORRECTIVE MAINTENANCE

3.4 PRINTER CABINET (Continued)

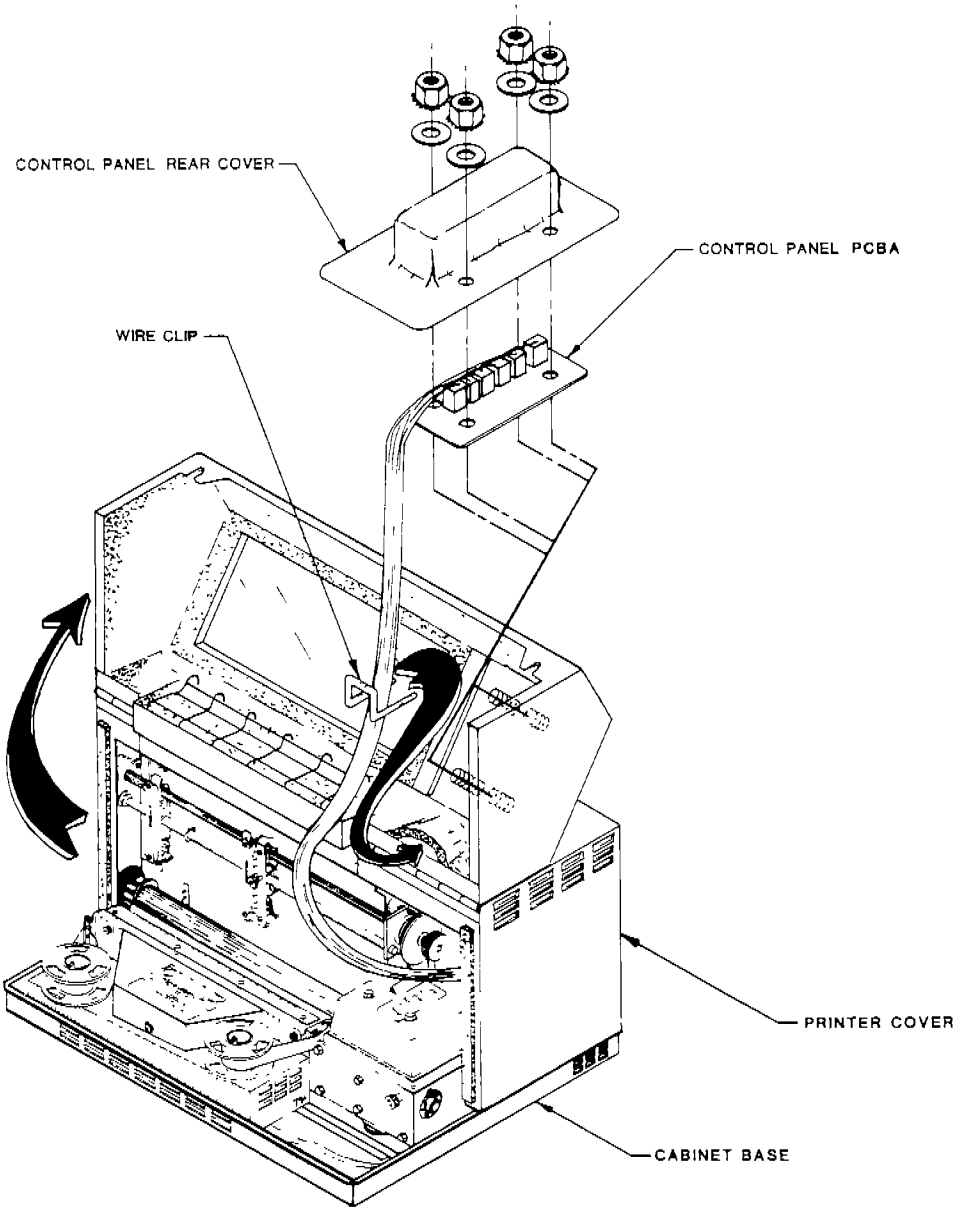

FIGURE 3-2.
PRINTER CABINET AND CONTROL PANEL

3.0 PREVENTIVE AND CORRECTIVE MAINTENANCE

3.5 PRINTER COVER

To remove the printer cover, refer to Figure 3-3. Remove the power cord and perform the following steps.

1. Remove the external I/O cable from the rear of the printer.

2. Remove all cover screws from under the edges of the base support assembly (pan).

● CAUTION ●

SUPPORT THE REAR COVER DOOR PRIOR TO REMOVING THE WIRE ROPE FROM THE REAR COVER DURING THE NEXT STEP. THIS WILL PREVENT THE DOOR FROM DROPPING DOWN ONTO (AND STRESSING) ANY CABLES CONNECTED TO THE BACK OF THE PRINTER.

3. Open the rear door.

4. Disconnect the rear cover door stop (wire rope) from the rear of the printer cover. It is not necessary to remove the grounding straps or the piano hinge.

5. Lift up the front cover so its retaining clips clear their pegs. Shift the cabinet toward the front of the printer.

6. Rotate the rear cover up and onto the front cover.

NOTE: It is possible to service most of the rear of the printer with the rear cover rotated onto the front cover. If additional access is required, the cover may be removed by performing the following steps:

7. Swing open the card cage. Remove connector LBP1 (Logic B PCBA location) and its screws from the card cage.

8. Cut cable ties as necessary to loosen the control panel from the printer; then lift off the printer cover and set aside.

To replace the cabinet cover, reverse the removal procedure.

3.0 PREVENTIVE AND CORRECTIVE MAINTENANCE

3.5 PRINTER COVER (Continued)

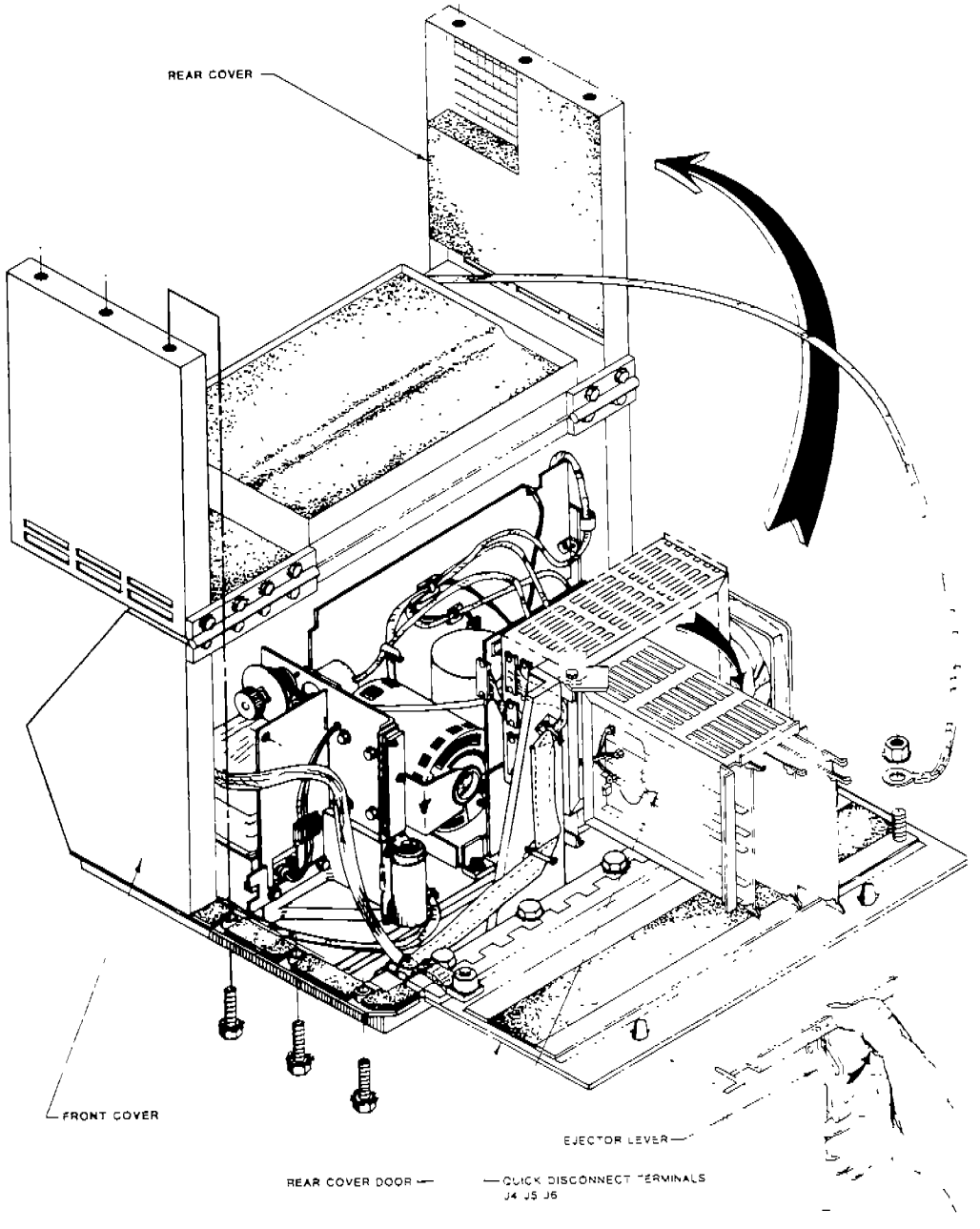

FIGURE 3-3.
REMOVING THE CABINET AND PCBAs

3.0 PREVENTIVE AND CORRECTIVE MAINTENANCE

3.6 CONTROL PANEL

The control panel consists of the panel and its cable plus 6 switches. Each switch contains an indicator lamp. The next group of sections detail the removal and replacement of each component.

To remove the control panel and its cable, remove the power cord and proceed as follows:

1. Open the printer front cover.

2. Refer to Figures 3-2 and 3-3; remove the four nuts and two washers that hold the control panel and its rear cover to the cabinet.

3. Remove the wire clip that guides the cable to the front cover (the clip just slips under the sound proofing pad).

4. Open the rear door and swing open the card cage. Remove the screws that hold connector LBP1 (Logic B PCBA location) on the card cage.

5. Cut cable ties as necessary to remove the control panel and its cable. Lift the assembly out of the printer.

To replace the control panel, reverse the removal procedure. Reinstall the cable ties.

● CAUTION ●

INSTALL THE LBP1 CONNECTOR SO THAT THE TOP OF ITS LABEL IS FACING THE SAME DIRECTION AS THE OTHER CARD CAGE CONNECTOR LABELS.

3.0 PREVENTIVE AND CORRECTIVE MAINTENANCE

3.7 CONTROL PANEL SWITCHES

To remove a control panel switch, remove the power cord and proceed as follows:

1. Open the printer cover.

2. Refer to Figure 3-2; remove the four nuts and washers that attach the control panel and its rear cover to the cabinet. Remove the rear cover leaving the panel in place.

3. Label all wire connections on the switch to be replaced and unsolder all the wires from the switch.

4. Cut the switch tie wrap. Press the spring clips against the body of the switch and push the switch out through the front of the panel.

To replace the control panel switch, proceed as follows:

1. Position the switch so that its solder terminals are oriented correctly. Push the switch into the vacant hole in the front of the panel until it is seated and its retaining spring clips are open on the rear of the panel.

2. Solder all the switch wires to their respective terminals.

3. Reinstall the rear cover and its four nuts and washers. Make sure the nuts and washers are snug.

3.8 INDICATOR LAMPS

To replace a switch indicator lamp, proceed as follows:

1. Grasp the upper and lower slots in the lens and pull the lens away from the panel.

2. Use the relamping tool to grasp and remove the lamp.

3. Install the new lamp with the relamping tool.

NOTE: The lamping tool should be used only as a holder for installing the lamp base into its socket.

4. Press the lens back into place until it snaps into normal position.

3.0 PREVENTIVE AND CORRECTIVE MAINTENANCE

3.9 RIBBON DRIVE ASSEMBLY

The Ribbon Drive Assembly is secured to the hammerbank bearing blocks by two Allenhead bolts. The assembly contains drive motors, ribbon spool hubs, the Ribbon Control PCBA and a blower to cool the hammerbank. Cables from other assemblies connect to the PCBA.

The Ribbon Drive Assemby can be either completely removed from the printer or placed in the service position.

To remove the assembly, remove the power cord and proceed as follows:

1. Set the Forms Thickness Adjustment lever to the Load position (fully raised).

2. Remove the ribbon spools from the Ribbon Drive Assembly hubs.

3. Remove the two screws that hold the Ribbon Drive Assembly to the hammerbank bearing blocks (Figure 3-4).

4. Raise the Ribbon Drive Assembly slightly and lift it off the retaining clips at the bottom rear of the assembly.

5. Label the connectors installed at J1, J2, and J3 on the Ribbon Control PCBA. Disconnect the connectors and the ground wire from the PCBA.

6. Cut tie wraps as necessary and slip the cable and the grommet out of the hole.

7. Remove the Ribbon Drive Assembly from the printer.

To replace the Ribbon Drive Assembly, reverse the removal procedure, being careful to connect the cables to their respective connectors on the PCBA.

To place the Ribbon Drive Assembly in the service position:

1. Set the Forms Thickness Adjustment lever to the Load position (fully raised).

2. Remove the ribbon spools from the Ribbon Drive Assembly hubs.

3. Remove the two screws that hold the Ribbon Drive Assembly to the hammerbank bearing blocks (Figure 3-4).

4. Raise the Ribbon Drive Assembly slightly and lift it off the retaining clips at the bottom rear of the assembly.

3.0 PREVENTIVE AND CORRECTIVE MAINTENANCE

3.9 RIBBON DRIVE ASSEMBLY (Continued)

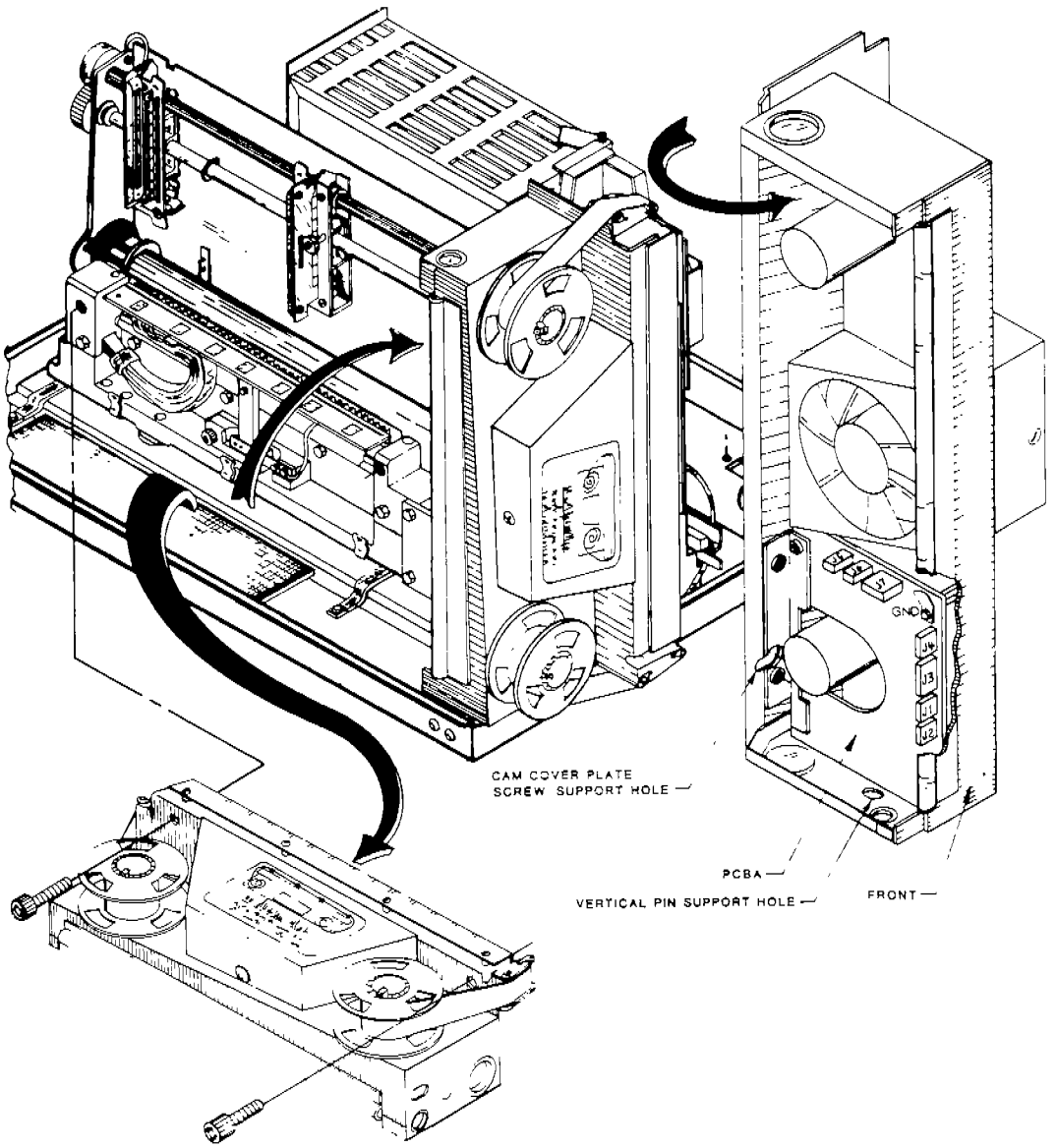

FIGURE 3-4.
THE RIBBON DRIVE ASSEMBLY

3.0 PREVENTIVE AND CORRECTIVE MAINTENANCE

3.9 RIBBON DRIVE ASSEMBLY (Continued)

5. Mount the Ribbon Drive Assembly on the vertical cover support pin on the printer base and the shoulder screw on the cam cover plate (Figure 3-4).

3.10 RIBBON CONTROL PCBA

To remove the Ribbon Control PCBA (Figure 3-5), proceed as follows:

1. Remove the Ribbon Drive Assembly per Section 3.9.

2. Set the Ribbon Drive Assembly upside down.

3. Label and disconnect all cables remaining on the PCBA.

4. Remove the two retaining screws and the ground lug from the PCBA. Remove the two PCBA retaining screws from the front of the Ribbon Drive Assembly chassis.

5. Remove the four nuts that hold the right ribbon motor.

6. Tip the motor and remove the PCBA from the chassis (Figure 3-5).

To replace the Ribbon Control PCBA, reverse the removal procedure.

● CAUTION ●

CONNECTORS ON THE CABLE ARE KEYED SO THEY CANNOT BE INSTALLED BACKWARDS. THE CABLE IS BUNDLED FOR ACCURATE PLACEMENT OF THE CABLE CONNECTORS ON THE PCBA. HOWEVER, IT IS POSSIBLE TO REVERSE CABLE CONNECTIONS BETWEEN J1 AND J6 ON THE PCBA. DO NOT FORCE CONNECTIONS.

3.0 PREVENTIVE AND CORRECTIVE MAINTENANCE

3.10 RIBBON CONTROL PCBA. (Continued)

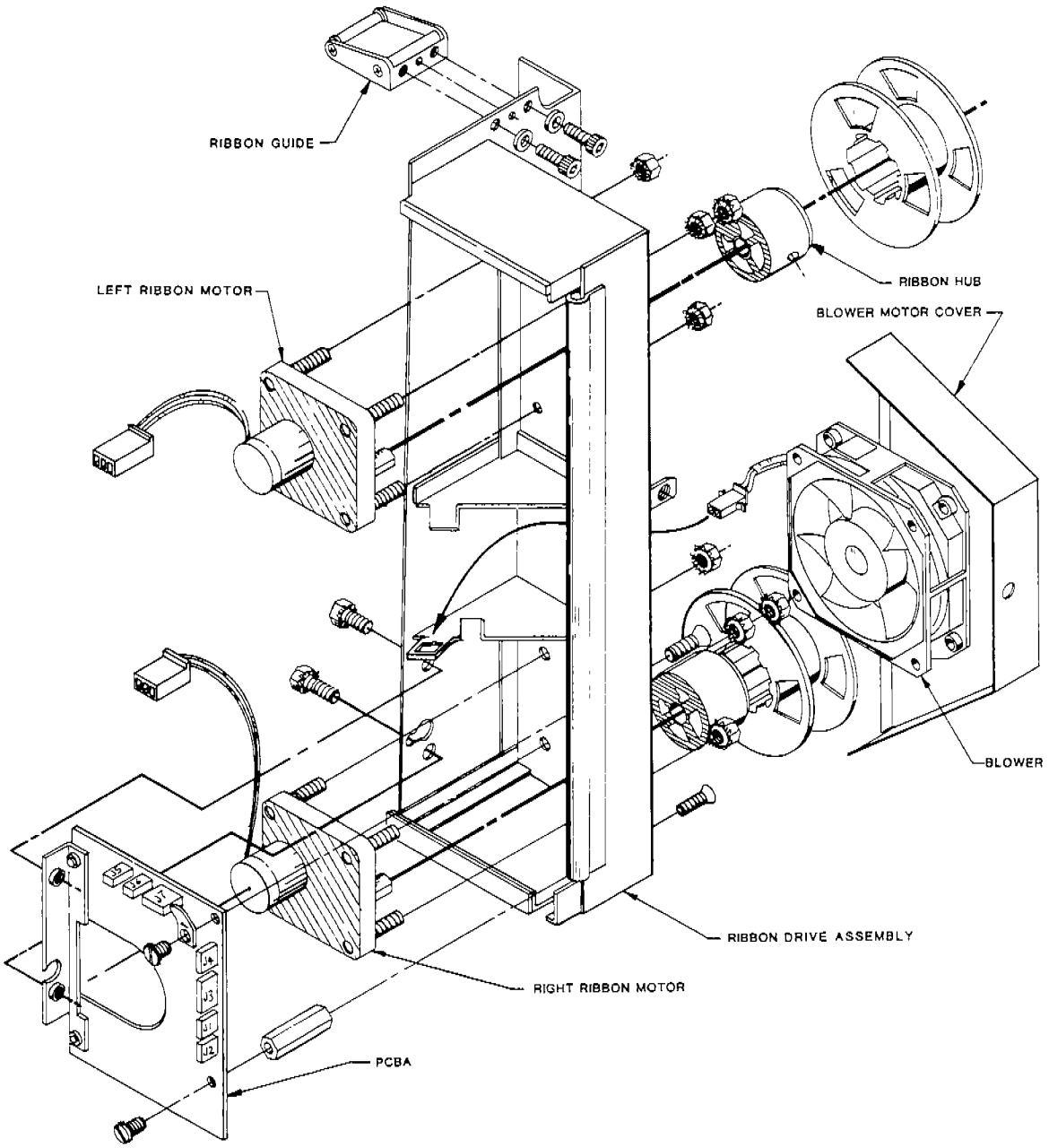

FIGURE 3-5.
DETAILS OF THE RIBBON DRIVE ASSEMBLY

3.0 PREVENTIVE AND CORRECTIVE MAINTENANCE

3.11 RIBBON HUBS AND GUIDES

Incorrectly adjusted ribbon spool hubs and ribbon guides will cause the ribbon to fold over and create missing print and ribbon damage. Ribbon foldover may also be caused by a worn ribbon.

To adjust the height of the ribbon spool hubs, perform the following steps at each hub:

1. Remove the ribbon spools from both hubs.

2. Check the distance between the bottom flange surface of the hub and the surface of the gear box. The hub should just clear the gear box surface. If the hub is too high, loosen the hub set screw and lower the hub. Retighten the set screw.

To check and adjust ribbon tracking, adjust the hubs and proceed as follows:

1. Install paper in the printer and mount the ribbon spools on the hubs with the full spool on the right hub. Open the rear access door so the connectors on the Power Supply PCBA are accessible.

2. Turn on the ac power to the printer.

3. Set the Forms Thickness Adjustment lever to any position between Load and position 6 that permits the CHECK indicator to remain off.

4. Disconnect MPU cable connector J4 on the Power Supply PCBA.

5. Press and release the ON LINE switch; shuttle action and ribbon motion should begin.

6. Momentarily short the skids across the left ribbon guide to cause the ribbon to run from right to left. Check to see that the ribbon is tracking centered in the left ribbon guide.

7. If the ribbon is not centered in the left ribbon guide, loosen the ribbon guide holding screws but leave them snug enough to hold by friction (Figure 3-5). Pivot the guide on its locating pin (on top of the guide) so that the ribbon tracks in the center of the guide; then tighten the screws.

8. Make sure that the ribbon is centered on the take up (left) spool and that the ribbon winds without interference at the spool flanges.

3.0 PREVENTIVE AND CORRECTIVE MAINTENANCE

3.11 RIBBON HUBS AND GUIDES (Continued)

9. After completing the ribbon tracking adjustment at the left guide, allow all of the ribbon to accumulate on the left spool. Momentarily short the right ribbon guide skids to cause the ribbon to move from left to right.

10. Repeat steps 7 and 8 for the right ribbon guide.

11. After adjusting the right ribbon guide, momentarily short the left ribbon guide skids for ribbon motion from right to left. Recheck tracking at the left ribbon guide and spool; readjust, if necessary.

12. BE SURE TO ALLOW THE RIBBON TO UNREEL COMPLETELY IN BOTH DIRECTIONS UNDER THE RIBBON REVERSING CONTROLS. Verify proper tracking, spooling, and reversal action. Readjust, if necessary.

13. When adjustments are completed, stop the printer. Reconnect J4 on the Power Supply PCBA and restore the printer to normal operation.

3.12 RIBBON DRIVE MOTORS

To replace a failed ribbon drive motor, refer to Figure 3-5 and proceed as follows:

1. Remove the Ribbon Drive Assembly per Section 3.9.

2. Loosen the hub set screw and remove the hub from the motor shaft.

3. Disconnect the motor cable connector from the Ribbon Control PCBA and cut any tie wraps holding the cable.

4. If the right motor is to be replaced, remove the Ribbon Control PCBA from the Ribbon Drive Assembly per Section 3.10.

5. Remove the four screws (or nuts) that hold the Ribbon Drive Motor to the chassis, then remove the motor.

To replace the motor, reverse the removal procedure. Replace the tie wraps cut in step 3. Adjust the ribbon hubs per Section 3.11.

3.0 PREVENTIVE AND CORRECTIVE MAINTENANCE

3.13 RIBBON DRIVE ASSEMBLY BLOWER

To remove and replace the blower in the Ribbon Drive Assembly, see Figure 3-5 and follow these steps.

1. Remove the Ribbon Drive Assembly from the printer per Section 3.9.

2. Remove the screw that holds the blower motor cover to the top of the Ribbon Drive Assembly.

3. Invert the Ribbon Drive Assembly.

4. Remove the blower connector from the chassis of the Ribbon Drive Assembly.

5. Disconnect the wire connection and remove the blower.

6. Run the leads of the new blower through the hole on top of the Ribbon Drive Assembly. Install the new blower on the assembly.

7. Connect the blower connector to the chassis and the mating connector.

8. Mount the blower motor cover on the tabs on top of the Ribbon Drive Assembly. Secure the cover with the screw removed in step 2 above.

9. Replace the Ribbon Drive Assembly in the printer per Section 3.9.

3.14 PRINTING MECHANISM

The printing mechanism consists of the following parts:

- The Shuttle Assembly
- The Hammerbank Assembly
- The Counterweight Assembly
- The Flywheel Assembly
- The Magnetic Pickup
- The Shuttle Motor

The next group of paragraphs describe procedures for replacement and alignment of these parts.

3.0 PREVENTIVE AND CORRECTIVE MAINTENANCE

3.15 SHUTTLE ASSEMBLY

The Shuttle Assembly can be completely removed from the printer for replacement or its hammerbank can be rotated to the service position when Hammerbank Assembly components are to be repaired. The spacing between the platen and the hammer tips should be checked and adjusted, if necessary, per Section 3.17 after maintenance. In addition, check spring forces and adjust if necessary per Section 3.18.

To remove the Shuttle Assembly, remove the power cord and proceed as follows:

1. Remove the printer cover per Section 3.5.

2. Remove the screws and star washers that hold the cam cover. Wipe off any metal chips left by the washers; then remove the cover and its gasket.

3. Mount the Ribbon Drive Assembly in the service position per Section 3.9.

4. Remove the screw (Item B, Figure 3-6) from the upper left corner of the cam cover plate.

5. Remove the screws from the bottom front of the bearing blocks (Item C.). Remove the ground wire (CG2) from the Shuttle Assembly.

6. Loosen the screws (Item D, Figure 3-6) at the top rear of each bearing block until the shuttle can be separated from the base support.

7. Remove the two screws that hold the Power Supply Assembly to the printer base. Slide the power supply rearward.

8. Disconnect the hammerbank cable C1+ connectors from the power supply capacitor.

9. Remove the HDP1 and HDP3 connectors and their screws from the Hammer Drive PCBA location on the card cage.

10. Remove tie wraps from the cable as necessary.

11. Carefully lift the Shuttle Assembly from the printer.

3.0 PREVENTIVE AND CORRECTIVE MAINTENANCE

3.15 SHUTTLE ASSEMBLY (Continued)

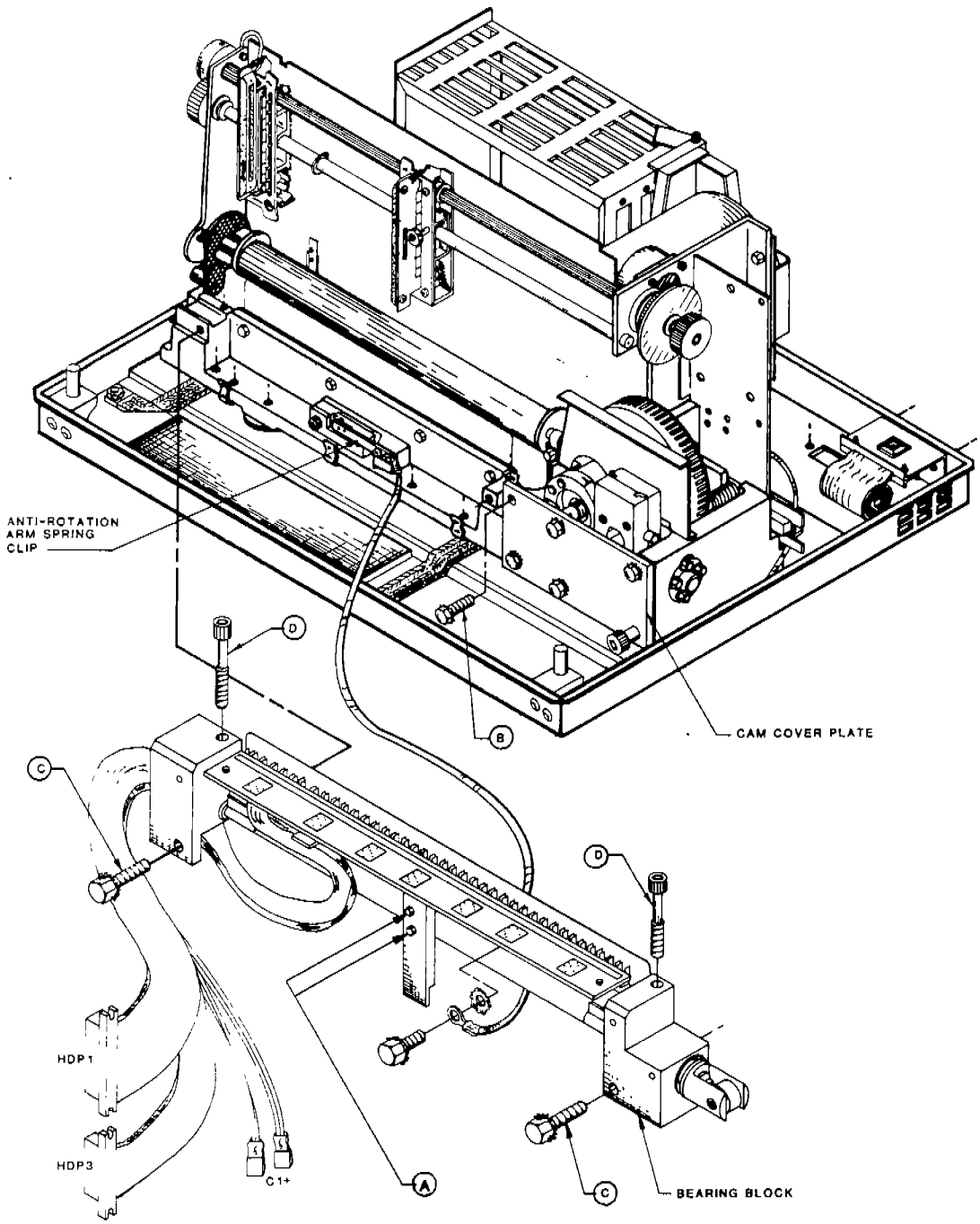

FIGURE 3-6.
THE SHUTTLE ASSEMBLY

3.0 PREVENTIVE AND CORRECTIVE MAINTENANCE

3.15 SHUTTLE ASSEMBLY (Continued)

To replace the Shuttle Assembly, proceed as follows:

1. Set the Shuttle Assembly in position on the printer casting, with the anti-rotation arm under the spring clip. Slip the hammerbank cable under the left bearing block, making sure the cable is not pinched by the bearing block. Reinstall the ground wire with an adequate service loop going up to the metal cable clamp.

2. Guide the hammerbank cable along its path to the power supply and the card cage.

● CAUTION ●

OBSERVE THE PROPER POLARITY WHEN INSTALLING THE C1+ CONNECTORS ON THE POWER SUPPLY CAPACITOR.

3. Install the C1+ connectors on the power supply capacitor.

4. Install the HDP1 and HDP3 connectors and their screws at the Hammer Drive PCBA location on the card cage.

5. Replace all cable tie wraps. Reinstall the power supply and its two screws.

6. Insert and hand tighten all of the bearing block retaining screws and the screw at the upper left corner of the cam cover plate.

7. Use two wrenches to simultaneously tighten both the top left bearing block retaining screw and the lower left bearing block screw (Figure 3-6).

8. Verify that the cable assembly moves freely under the left bearing block.

9. Use two wrenches to simultaneously tighten the two right bearing block screws (Figure 3-6).

10. Adjust the platen gap. (Section 3.17.)

11. Replace the Ribbon Drive Assembly per section 3.9.

12. Replace the printer cover per section 3.5.

3.0 PREVENTIVE AND CORRECTIVE MAINTENANCE

3.16 ROTATING THE HAMMERBANK TO THE SERVICE POSITION

It is necessary to rotate the hammerbank toward the front of the printer in order to replace and adjust hammer springs and replace hammer coils.

To rotate the hammerbank, perform the following steps:

1. Remove the power cord and open the front cover.

2. Set the Forms Thickness Adjustment lever to the Load position (fully raised) and remove any paper from the printer.

3. Mount the Ribbon Drive Assembly in the service position per Section 3.9.

4. Remove the two screws (Item A, Figure 3-6) that hold the anti-rotation arm.

5. Remove the anti-rotation arm, moving it upward with a slight tilt forward to clear the hammerbank.

6. Slide the right tractor to the right to avoid damage to the Hammerbank Cover Assembly. Rotate the Hammerbank Assembly toward the front of the printer. (See Figure 3-7.)

7. Carefully lift the ends of the Hammerbank Cover Assembly from the roll pins in the shuttle and lift out. The assembly will tend to stick to the magnetized shuttle, therefore be careful not to bend it at the roll pins.

● CAUTION ●

BE ESPECIALLY CAREFUL WHEN REMOVING OR REPLACING THE HAMMERBANK COVER ASSEMBLY OR PERFORMING OTHER PROCEDURES IN THE HAMMERBANK AREA. THE CARBIDE TIPS USED IN THE HAMMERBANK CAN CHIP OR BREAK IF EXCESS LATERAL FORCE IS APPLIED TO THEM.

3.0 PREVENTIVE AND CORRECTIVE MAINTENANCE

3.16 ROTATING THE HAMMERBANK TO THE SERVICE POSITION (Continued)

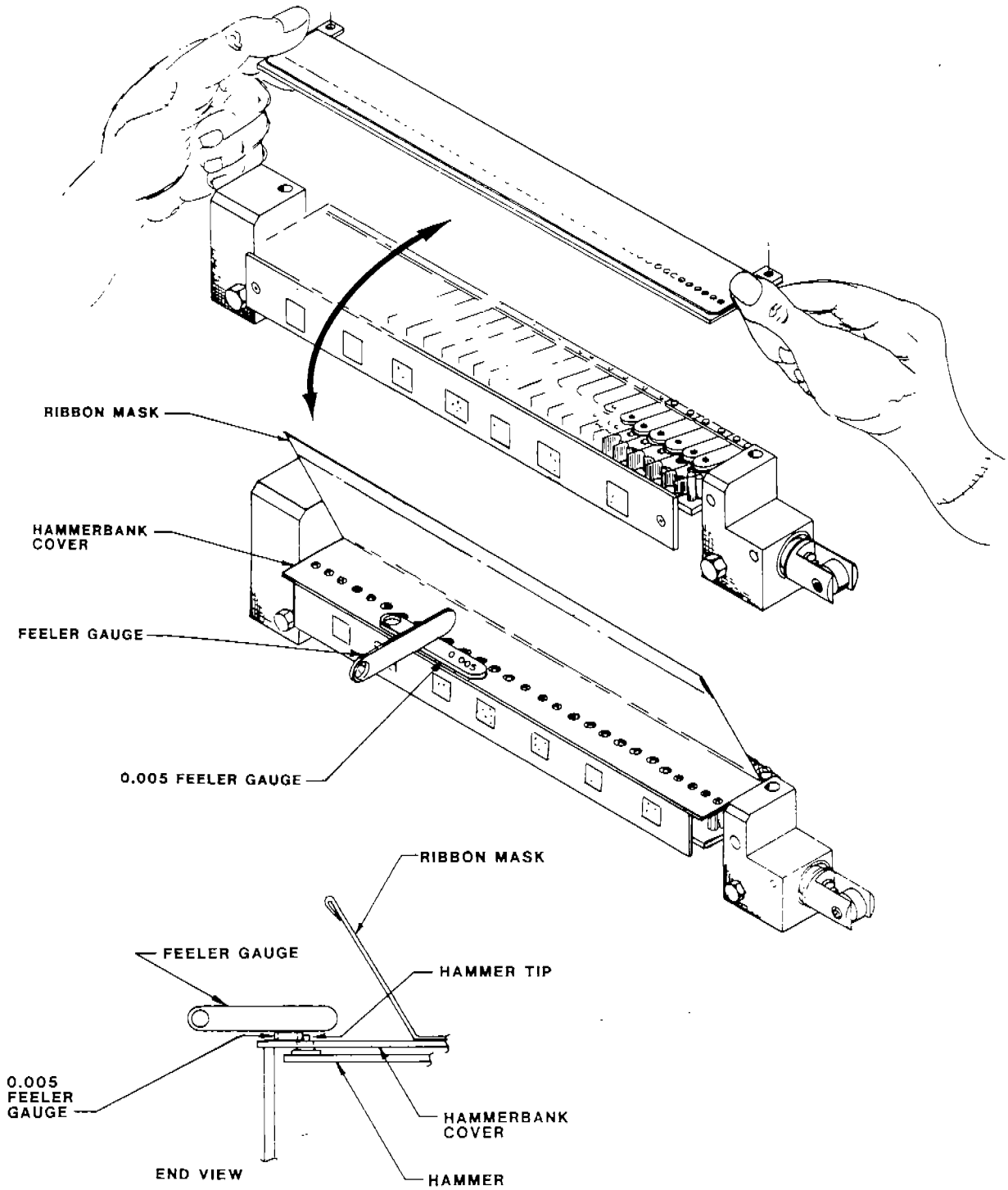

FIGURE 3-7.
HAMMERBANK IN SERVICE POSITION WITH COVER ASSEMBLY REMOVED

3.0 PREVENTIVE AND CORRECTIVE MAINTENANCE

3.16 ROTATING THE HAMMERBANK TO THE SERVICE POSITION (Continued)

To clean the hammerbank area, proceed as follows:

1. Rotate the hammerbank to the service position and remove the Hammerbank Cover Assembly. Observe the previous carbide tip CAUTION.

2. Use a stiff nonmetalic bristle brush to remove ribbon lint and paper dust from the hammer springs and hammer tips. Vacuum the loosened particles. Remove stubborn particles by using a shop cloth or Kimwipe equivalent that is lightly moistened with isopropyl alcohol.

3. Thoroughly clean all surfaces and holes in the hammerbank cover with a cloth lightly moistened with isopropyl alcohol.

4. Replace the hammerbank cover and restore the hammerbank to its normal condition.

To restore the hammerbank to its operating condition after maintenance procedures have been completed, perform the following steps:

1. Rotate the hammerbank back to its normal position.

2. Replace the anti-rotation arm in its normal position. Install the two screws (Item A, Figure 3-6) that hold the arm in place. Torque the screws to 12 inch pounds.

3. Turn off the ac power.

4. Verify the hammer tip to platen gap adjustment per Section 3.17, steps 5 and 6. Adjust, if necessary, per Section 3.17, steps 7 and 8.

5. Replace the Hammerbank Cover Assembly fitting the holes in its ends over the roll pins in the shuttle. Observe the CAUTION concerning carbide tips.

NOTE: Placing a piece of paper between the hammer tips and the paper ironer eases hammerbank cover installation. The paper should be installed via the top of the Hammerbank Assembly.

6. Replace the Ribbon Drive Assembly per Section 3.9.

3.0 PREVENTIVE AND CORRECTIVE MAINTENANCE

3.17 ADJUSTING PLATEN TO HAMMER TIP SPACING

To obtain an even printing density across the page, the gap between the platen and the hammer tips must be made equal at both ends of the hammerbank. To check and adjust the platen to hammer tips gap, see Figure 3-8 and proceed as follows:

1. Remove the power cord and the paper from the printer.

2. Set the Forms Thickness Lever to the LOAD (up) position.

3. Mount the Ribbon Drive Assembly in the service position per Section 3.9.

● CAUTION ●

CARBIDE TIPS ARE SUSCEPTIBLE TO BREAKAGE FROM LATERAL STRESS. USE CARE TO RAISE THE COVER HOLES FREE OF THE TIPS BEFORE REMOVING THE COVER FROM THE SHUTTLE.

4. Remove the Hammerbank Cover Assembly as follows (Do not rotate the hammerbank into the service position):

   a. Force the top edge of the hammerbank cover forward and away from the hammer springs.

   b. Place your thumbs as far down as possible between the cover and the hammerbank.

   c. Push forward with your thumbs and simultaneously pull back with your fingers to release the cover from the magnetic force and the roll pins.

   d. Carefully lift the cover straight up.

5. Measure the platen gap as follows:

   a. Insert a 0.012 inch feeler gauge between the platen and hammer tips within six hammer positions of one end of the hammerbank.

● CAUTION ●

BE SURE THAT THE GAUGE DOES NOT BEND OR INTERFERE WITH THE PAPER IRONER.

3.0 PREVENTIVE AND CORRECTIVE MAINTENANCE

3.17 ADJUSTING PLATEN TO HAMMER TIP SPACING (Continued)

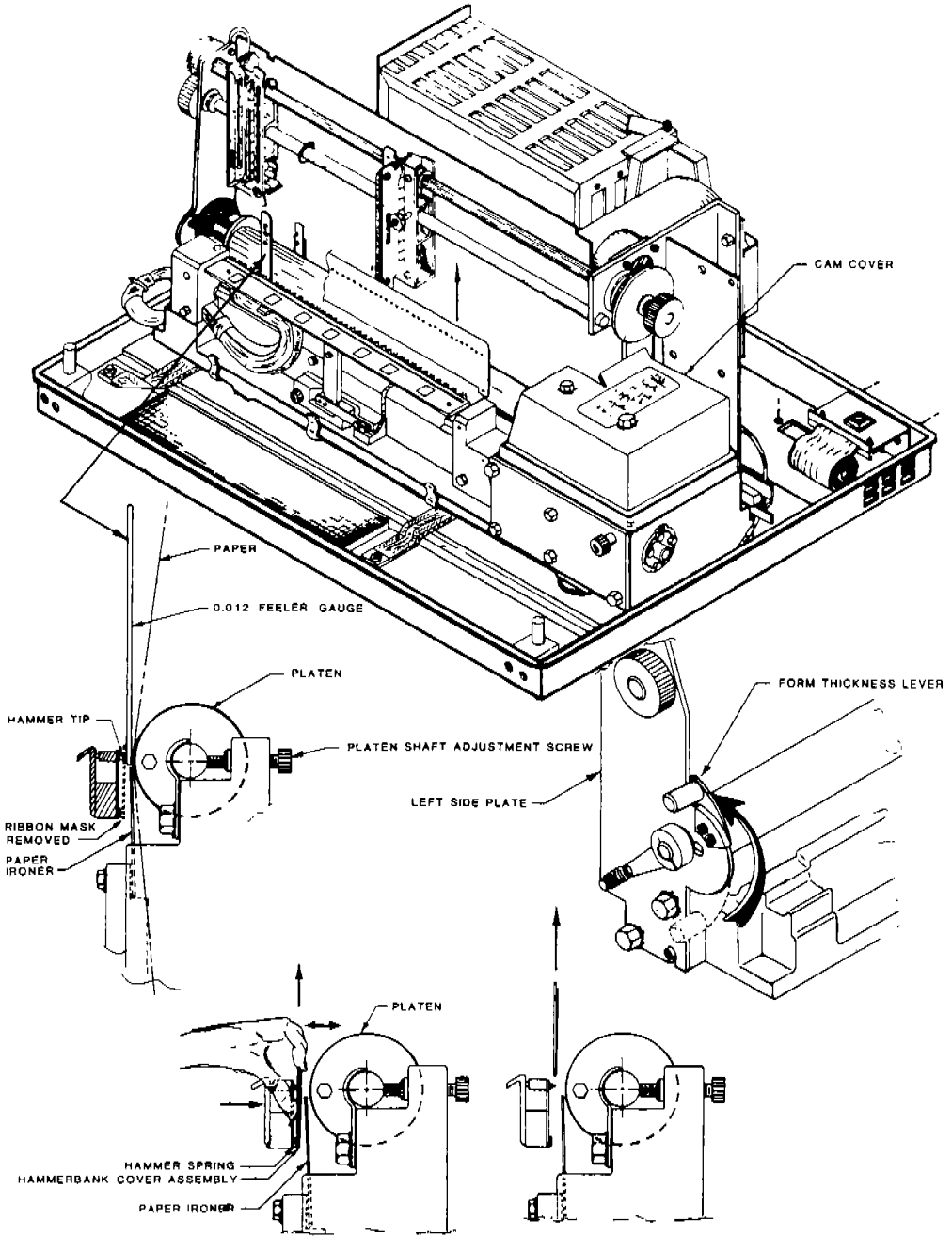

FIGURE 3-8.
SHUTTLE ASSEMBLY SERVICE DETAILS

3.0 PREVENTIVE AND CORRECTIVE MAINTENANCE

3.17 ADJUSTING PLATEN TO HAMMER TIP SPACING (Continued)

b. Carefully move the Forms Thickness Lever to the closed position. DO NOT FORCE it into position against the feeler gauge. The gauge should move with very little friction between the surfaces and lie in contact with both. To be certain that the gauge is vertical in both the lateral and front to rear positions, shift it slightly until minimal friction is encountered.

6. Repeat the gap measurement within six hammer positions of the other end of the hammerbank.

7. Correct the gap measurement by adjusting the platen shaft support bolt at that end of the base casting. Rotate the bolt counterclockwise to increase the gap or clockwise to decrease the gap. A rotation of a quarter turn results in an approximate 0.007 inch gap change.

NOTE: Access to the support bolts is through the rear door of the printer. A 5/32 inch Allen socket wrench on a 12 inch extension is required to rotate the bolts.

8. Check both ends of the platen after adjustment. An adjustment at one end will slightly alter the other end.

9. When the gap at both ends is correctly adjusted, replace the Hammerbank Cover Assembly onto the roll pins using the same caution stated previously.

NOTE: Placing a piece of paper between the hammer tips and the paper ironer eases Hammerbank Cover installation. The paper should be installed through the top of the Hammerbank Assembly.

10. Replace the Ribbon Drive Assembly per Section 3.9 and restore the printer to normal operation.

3.0 PREVENTIVE AND CORRECTIVE MAINTENANCE

3.18 SHUTTLE SPRING FORCE ADJUSTMENT

Excessive rattle under the cam cover may be eliminated as follows:

NOTE: Although this section compensates spring forces and reduces rattle, the absolute spring force is not determined. Incorrect spring force may result in impaired print quality. If these techniques do not eliminate the rattle, call Printronix Field Service for assistance.

1. Remove the screws and washers holding the cam cover. Wipe any metal chips off the cover. Remove the cam cover with its gasket.

2. Check the area under and around the shuttle spring for any shims that may have broken or fallen from the Shuttle Assembly. Replace any broken or loose shims per step 6 or 7. When all shims are in place, turn on power to the printer.

3. Place the printer online so the shuttle operates. Cycle the ON LINE switch off and on to continue the shuttle operation.

4. Apply heavy pressure to the right side of the counterweight.

   a. If the rattle decreases, add a shim against the counterweight spring, following step 7.

   b. If the rattle does not change, add a shim against the shuttle spring, following step 6.

5. Turn off the power to the printer.

6. Insert a 0.01 inch shuttle spring shim (P/N 101565-001) between the cam follower yoke and the shuttle spring (Figure 3-9) as follows:

   a. Use a sharp screwdriver to pry the spring away from the yoke.

   b. Insert the shim and press down on the shim until it is flush with the yoke. More than one shim may be required to obtain the required effect.

7. Insert a 0.01 inch counterweight spring guide shim (P/N 101564-001) between the side of the base casting and the spring seat plate as follows:

   a. Loosen the holding screw in the side casting approximately three turns.

3.0 PREVENTIVE AND CORRECTIVE MAINTENANCE

3.18 SHUTTLE SPRING FORCE ADJUSTMENT (Continued)

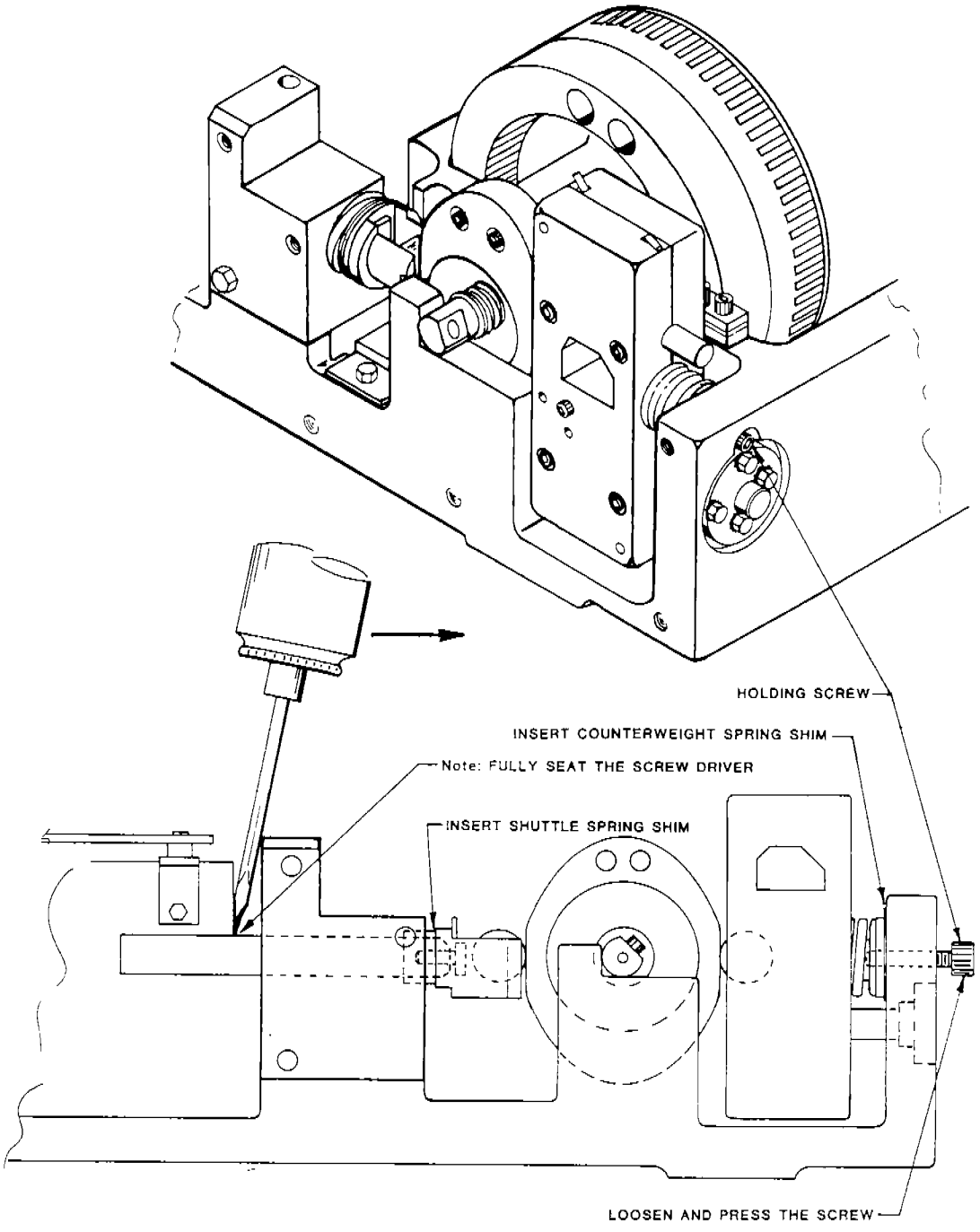

FIGURE 3-9.
FLYWHEEL ASSEMBLY AND COUNTERWEIGHT ASSEMBLY

3.0 PREVENTIVE AND CORRECTIVE MAINTENANCE

3.18 SHUTTLE SPRING FORCE ADJUSTMENT (Continued)

b. Press on the holding screw head with an Allen wrench against the spring tension. This will shift the seat plate to the left, away from the casting and allow the shim(s) to be installed. Tighten the holding screw.

8. Replace the cam cover and gasket.

3.19 HAMMER SPRINGS

Performance tests should be run to verify good print quality. If print quality is poor, refer to the following steps and Figure 3-10.

- HAMMER SPRING REMOVAL

1. Place the Ribbon Drive Assembly in the service position per Section 3.9.

2. Rotate the Hammerbank Assembly into the service position per Section 3.16.

3. Carefully remove the Hammerbank Cover Assembly and clean with a soft cloth moistened with isopropyl alcohol.

4. Remove the clamp plate screw for the hammer spring and loosen the adjacent screw on that clamp plate. Remove the hammer spring by sliding it forward over the coil pin, past the clamp plate.

NOTE: Hammerbanks with split clamp plates require that only the hammer spring screw be loosened.

- HAMMER SPRING REPLACEMENT

● CAUTION ●

HANDLE NEW HAMMER SPRINGS CAREFULLY.
TRANSPORT SPRINGS FLAT AND UNSTRESSED.

1. Position the new hammer spring in the normal position and cover it with the clamp plate. Be sure that the mounting surfaces and the pole pin are clean and free of chips and burrs.

2. Replace the hammer spring screw, but leave it finger tight.

● CAUTION ●

USE ONLY THE SPECIFIED SCREW TO HOLD THE HAMMER SPRING. ANY OTHER TYPE OF SCREW MAY DAMAGE THE HAMMERBANK.

3.0 PREVENTIVE AND CORRECTIVE MAINTENANCE

3.19 HAMMER SPRINGS (Continued)

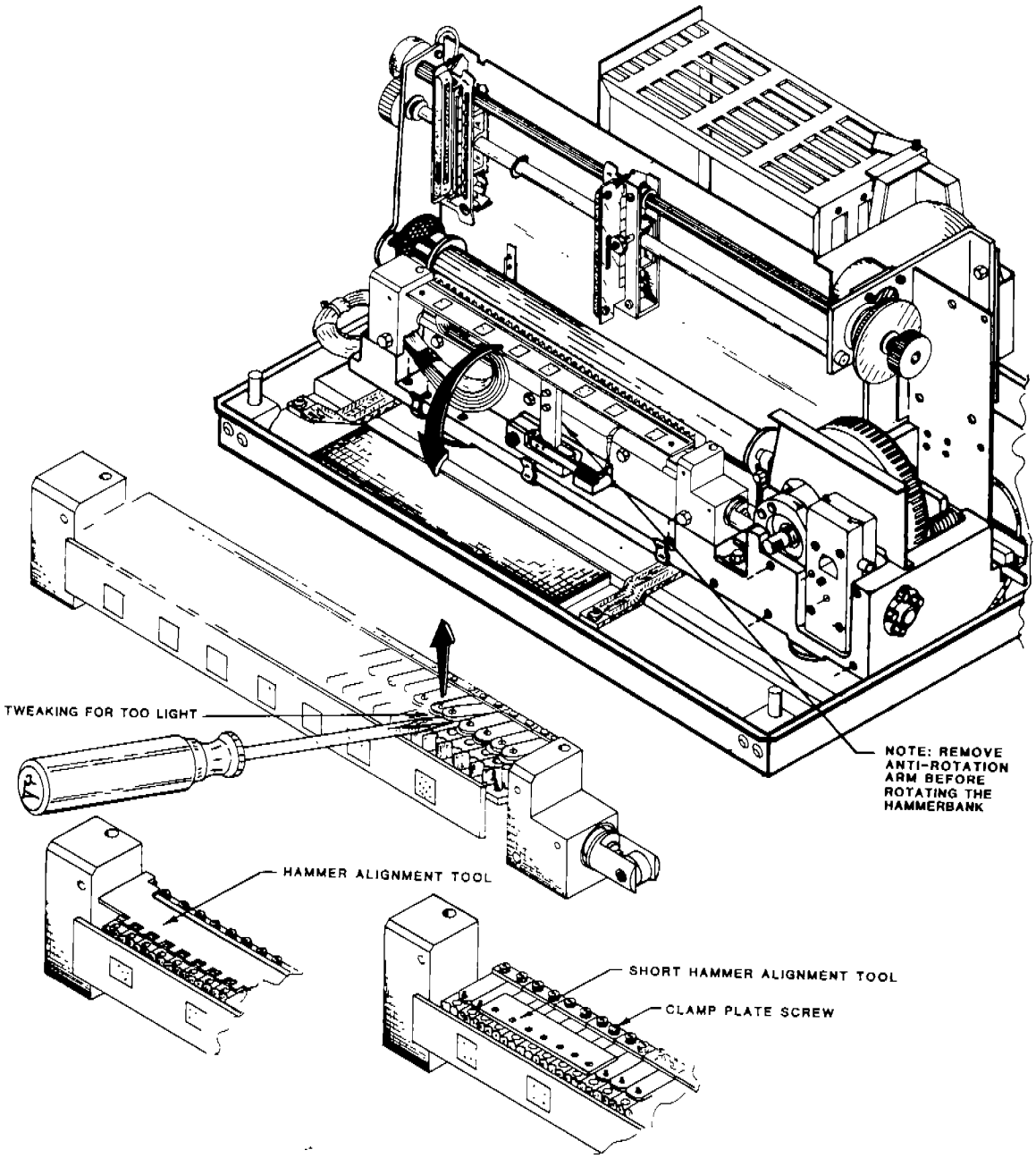

FIGURE 3-10.
HAMMER SPRING SERVICING

3.0 PREVENTIVE AND CORRECTIVE MAINTENANCE

3.19 HAMMER SPRINGS (Continued)

3. Align the hammer spring per the alignment instructions.

4. Restore the hammerbank to its normal position per Section 3.16, but do not install the Hammerbank Cover Assembly.

5. Check the gap between the hammer tip and platen per Section 3.17; adjust if necessary.

6. Replace the Hammerbank Cover Assembly per Section 3.16, step 8. Observe the caution concerning carbide tips.

7. Replace the Ribbon Drive Assembly per Section 3.9.

● HAMMER SPRING ALIGNMENT

The hammerbank must be in the service position with the hammerbank cover off, and the screw that holds the hammer spring must be loose. To align a hammer spring proceed as follows:

1. Fit the holes in the hammer alignment tool (Figure 3-10) over the hammer tips on either side of the hammer spring being replaced.

2. Position the tip of the hammer spring so that the tip fits into its respective hole in the tool.

● CAUTION ●

CARBIDE TIPS MAY BE CHIPPED OR BROKEN OFF BY TOO MUCH LATERAL FORCE. BE ESPECIALLY CAREFUL WHEN USING THE HAMMER ALIGNMENT TOOL.

3. Torque each hammer spring screw on the clamp plate to 12 inch pounds. Correct torque is essential for proper printer operation.

4. Remove the alignment tool carefully so the hammer tips are not damaged.

● CAUTION ●

WHILE TORQUING THE HAMMERBANK SCREWS, HOLD THE CLAMP PLATE IN POSITION TO BE SURE IT REMAINS PERPENDICULAR TO THE HAMMER SPRINGS AND DOES NOT EXTEND BEYOND THE EDGE OF THE HAMMERBANK ASSEMBLY.

5. Repeat this procedure for each hammer spring to be aligned. When all hammer springs are aligned, restore the hammerbank to its normal position per Section 3.16.

3.0 PREVENTIVE AND CORRECTIVE MAINTENANCE

3.19 HAMMER SPRINGS (Continued)

- HAMMER SPRING ADJUSTMENT

"Tweaking" (slightly bending a hammer spring) should be done if performance tests disclose that a hammer spring is printing too light or too dark.

Too Light – Slightly tweak the end of the hammer spring toward the platen using a screwdriver tip (Figure 3-10).

Too Dark – 1. Rotate the hammerbank to the service position per Section 3.16 and remove the spring as described above.

2. Grip the spring with a pair of longnose pliers so that the screw hole is just covered and tweak the spring in the direction opposite the hammer tip (Figure 3-11).

3. Replace the spring as described above and rotate the hammerbank to the normal position per Section 3.16.

After the hammer springs have been tweaked as necessary, repeat the performance tests. Tweak again, if necessary.

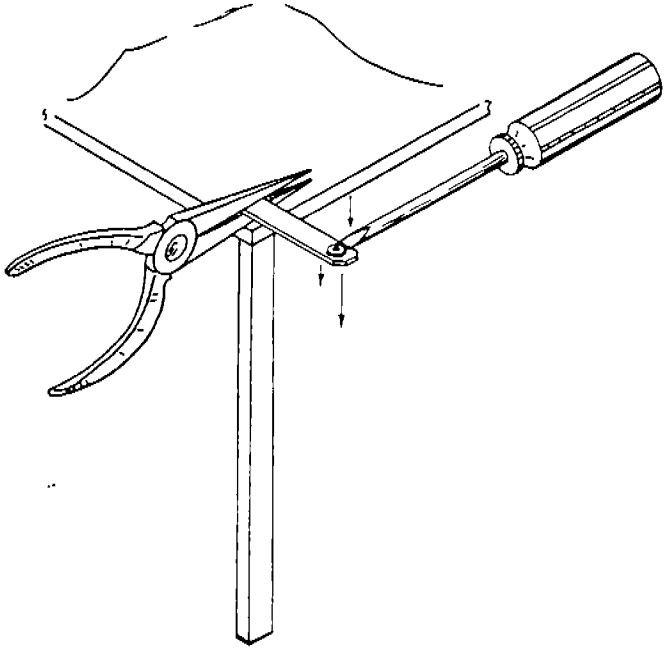

FIGURE 3-11.
TWEAKING THE HAMMER SPRING EXTERNALLY

3.0 PREVENTIVE AND CORRECTIVE MAINTENANCE

3.19 HAMMER SPRINGS (Continued)

- HAMMER SPRING CLEANING

If performance tests disclose poor print quality, the hammerbank should be cleaned as described in Section 3.16.

- TIP PROTRUSION TESTS

Hammer tips should protrude through the hammerbank cover between 0.001 and 0.005 inch. Negative protrusion is less than 0.001 inch, and excessive protrusion is more than 0.005 inch. To test tip protrusion see Figure 3-7 and proceed as follows:

1. Rotate the hammerbank to the service position per Section 3.16.

2. Lift the ribbon mask from the hammerbank cover and place a 0.005 inch feeler gauge blade on the cover, next to the hammer tips.

3. Slide the blade along the full length of the hammerbank; the blade should touch all hammer tips as it travels.
NOTE: If the blade fails to touch hammer tips, there is NEGATIVE tip protrusion.

4. Slide another feeler gauge blade over the top surface of the 0.005 inch blade. There should be no contact between the sliding blade and the hammer tips at any portion of the hammerbank.
NOTE: If the blade touches the hammer trips, there is EXCESSIVE tip protrusion.

5. Use the following tip protrusion correction section to repair detected problems.

- TIP PROTRUSION CORRECTION

Negative protrusion. Remove the Hammerbank Cover Assembly and determine if a stainless steel strip is on the surface nearest the hammerbank.

1. If a strip exists, remove it and reinstall the assembly. Perform the protrusion tests again.

2. If no strip exists, replace the Shuttle Assembly per Section 3.15.

Excessive protrusion - Remove the Hammerbank Cover Assembly. Install a stainless steel strip (P/N 105639-001) on the hammerbank cover surface closet to the hammerbank. Be sure to install the strip in front of the row of holes.

3.0 PREVENTIVE AND CORRECTIVE MAINTENANCE

3.19 HAMMER SPRINGS (Continued)

- TIP DAMAGE TESTS

A tip with a burr, chip or improper radius causes poor print quality. This damage is caused by improper handling or snapping the hammerbank cover against the tips.

To detect damaged hammer tips, look for snagged ribbon or perform this test:

1. Rotate the Forms Thickness Adjustment lever to the load (up) position and remove the ribbon.

2. Remove the Hammerbank Cover Assembly per Section 3.17 step 4.

CAUTION

WHEN CLEANING THE HAMMER TIPS IN THE FOLLOWING PROCEDURE, DO NOT USE EXCESSIVE AMOUNTS OF ALCOHOL, AS DAMAGE TO THE COILS MAY RESULT.

3. Clean all the hammer tips with isopropyl alcohol and cotton swabs.

4. Reinstall the Hammerbank Cover per Section 3.17 step 9.

5. Install a new ribbon and run the RECYCLE test for 20 minutes.

6. Rotate the hammerbank to the service position per Section 3.16.

7. Remove the cover and replace those hammer springs that have built up ribbon fabric and ink.

3.20 HAMMER COILS

The coil is secured to the Hammerbank Assembly by adhesive. To remove and replace the hammer coil, proceed as follows:

1. Place the Ribbon Drive Assembly in the service position per Section 3.9.

2. Remove the hammer spring per Section 3.19.

3.0 PREVENTIVE AND CORRECTIVE MAINTENANCE

3.20 HAMMER COILS (Continued)

3. Break off the hammer coil heat sink (Figure 3-12). Strip off the top of the coil and the wires from the bobbin.

4. Split the bobbin with an awl and peel it off the pole pin. Carefully remove the bobbin pins from the Hammerbank Cable Assembly Connector. Thoroughly clean the pole pin.

5. Put ONLY ONE DROP of Eastman 910 adhesive at the base of the new hammer coil and install the new coil on the pole pin. Simultaneously press the coil down firmly on the base of the pin while inserting the bobbin pins in the connector on the Hammerbank Cable Assembly.

6. Replace the hammer spring, clamp plate (if it was removed), and align the hammer per Section 3.19.

7. Replace the Ribbon Drive Assembly per Section 3.9.

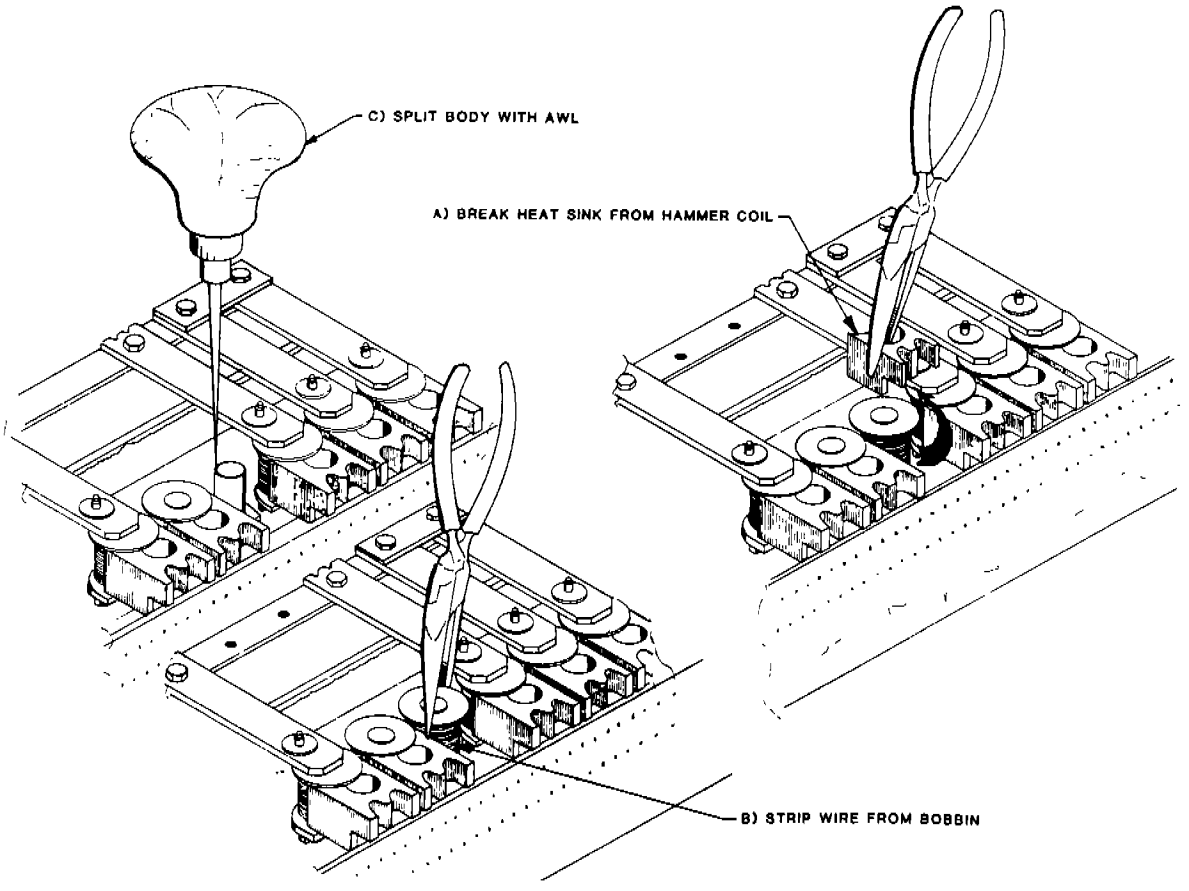

FIGURE 3-12.
REMOVING THE HAMMER COIL ASSEMBLY

3.0 PREVENTIVE AND CORRECTIVE MAINTENANCE

3.21 PAPER IRONER

To remove and replace the paper ironer (Figure 3-13), remove the power cord and proceed as follows:

1. Place the Ribbon Drive Assembly in the service position per Section 3.9.

2. Loosen the paper ironer retaining screws.

3. Rotate the hammerbank into the service position per Section 3.16.

4. Remove the old paper ironer.

5. Remove any paper chaff from the paper ironer mounting area.

6. Replace the paper ironer.

7. Tighten the paper ironer retaining screws.

NOTE: The middle screws should be tightened first to prevent buckling of the ironer.

8. Place the hammerbank in normal position per Section 3.16.

9. Replace the Ribbon Drive Assembly per Section 3.9.

3.0 PREVENTIVE AND CORRECTIVE MAINTENANCE

3.21 PAPER IRONER (Continued)

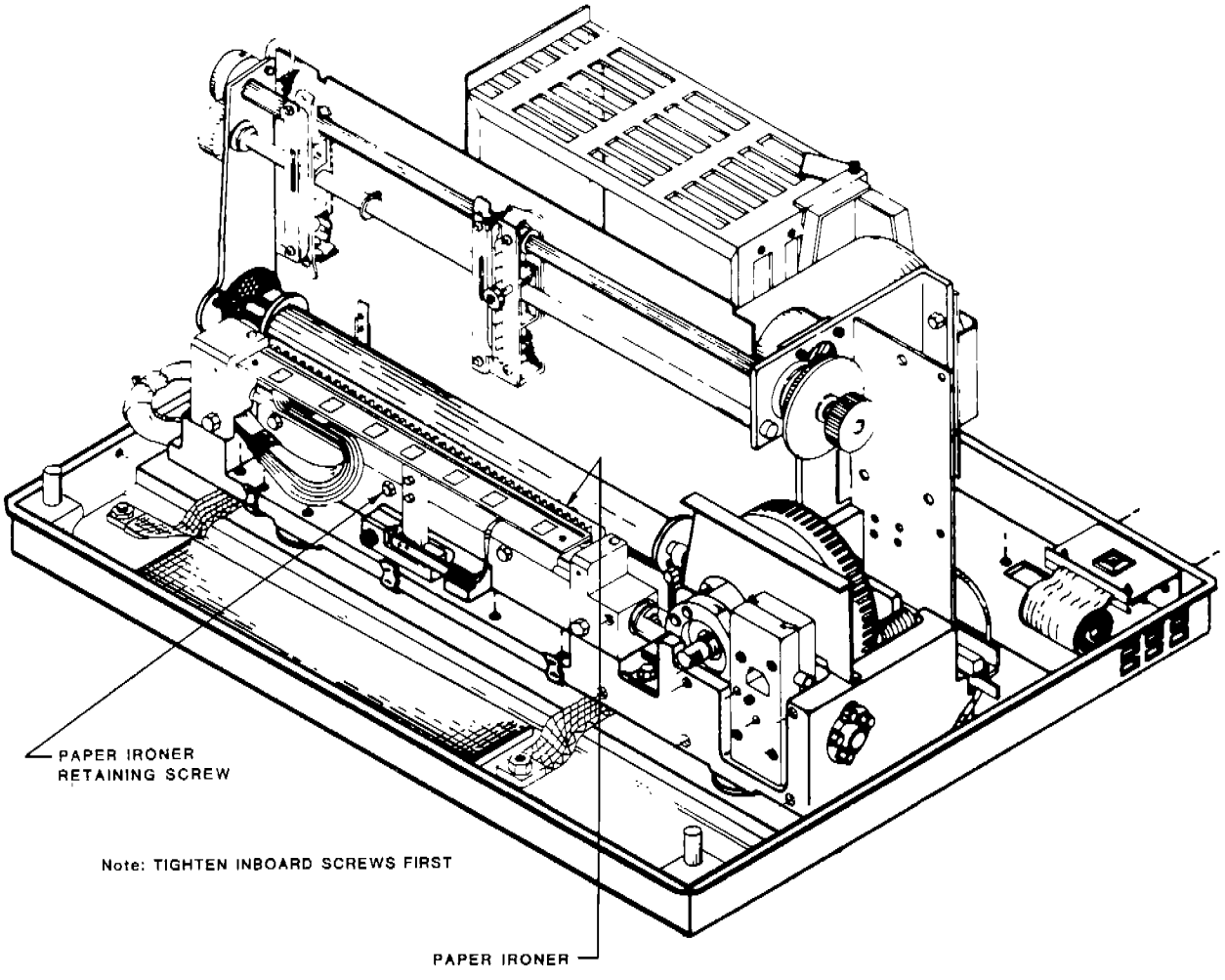

FIGURE 3-13.
THE PAPER IRONER

3.0 PREVENTIVE AND CORRECTIVE MAINTENANCE

3.22 COUNTERWEIGHT ASSEMBLY

The Counterweight Assembly may need to be removed in order to replace a worn shaft, bushing, or spring, or to remove the Flywheel Assembly.

- REMOVAL AND REPLACEMENT

To remove the Counterweight Assembly, (Figure 3-14) perform the following steps:

1. Remove the power cord and raise the front cover.

2. Remove the screws and star washers holding the cam cover. Wipe off any metal chips left by the star washers. Remove the cover and its gasket.

3. Remove the screws and star washers holding the cam cover plate and the ground wire. Remove the plate with its gasket and replace the shoulder screw.

4. Remove the four screws from the Lower Shaft Assembly (Figure 3-14). Gently pry the Lower Counter Shaft Assembly out of the counterweight.

5. Remove the counterweight spring retaining screw (just above the Lower Shaft Assembly).

6. Lift the counterweight upward away from the cam. The counterweight, the spring spacer, shims, washers, and upper counterbalance will come free as all loose pieces.

To replace the Counterweight Assembly, reverse the removal procedure, making sure to snap the spring clip into the slot in the upper shaft. It may be necessary to perform the shuttle spring force adjustment procedures in section 3.18.

- LUBRICATION

Lubrication of the counterweight is easily done:

1. Pull out both oil port plugs with a pair of serrated long nose pliers.

2. Add ONE DROP of SAE 20 oil to each port.

3. Replace the oil port plugs.

Once the counterweight is oiled, verify that the counterweight cam follower, the hammerbank cam follower and the cam on the flywheel are properly lubricated by checking the wick as follows:

1. Remove the cam cover retaining screws and star washers. Thoroughly wipe off any loose chips to prevent them from getting into the cam area.

3.0 PREVENTIVE AND CORRECTIVE MAINTENANCE

3.22 COUNTERWEIGHT ASSEMBLY (Continued)

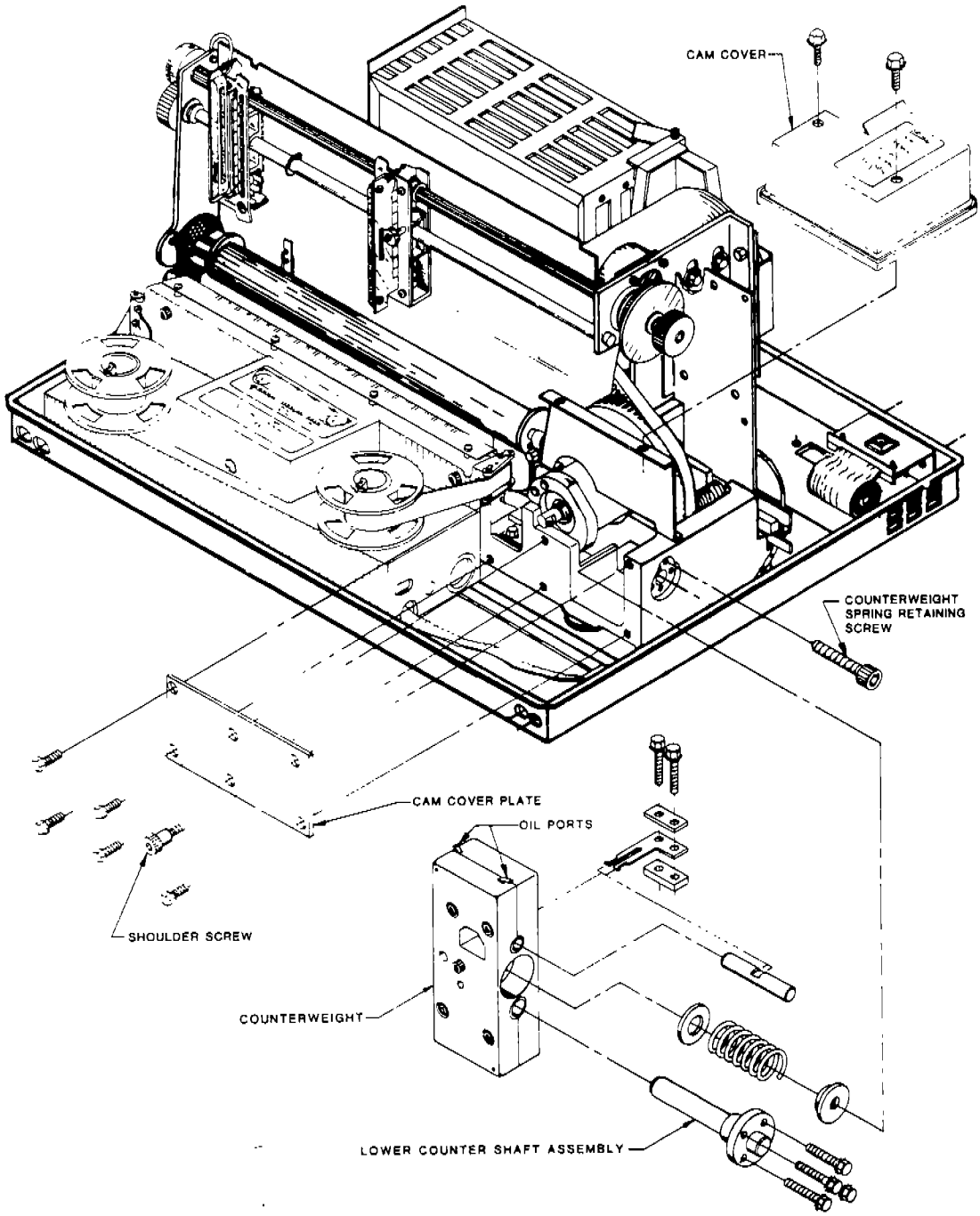

FIGURE 3-14.
COUNTERWEIGHT ASSEMBLY DETAILS

3.0 PREVENTIVE AND CORRECTIVE MAINTENANCE

3.22 COUNTERWEIGHT ASSEMBLY (Continued)

2. Check for oil film on the cam surface by pressing a pen or narrow tool down into the wick between the hammerbank cam follower and the end of the yoke. If the tool does not pick up some oil from the wick or if the oil does not appear on the surface of the wick, slowly apply medium weight oil (SAE 20 or equivalent) to the lower fold of the wick (Figure 3-15) until the wick is saturated.

3. Replace the cam cover and gasket, the screws and washers.

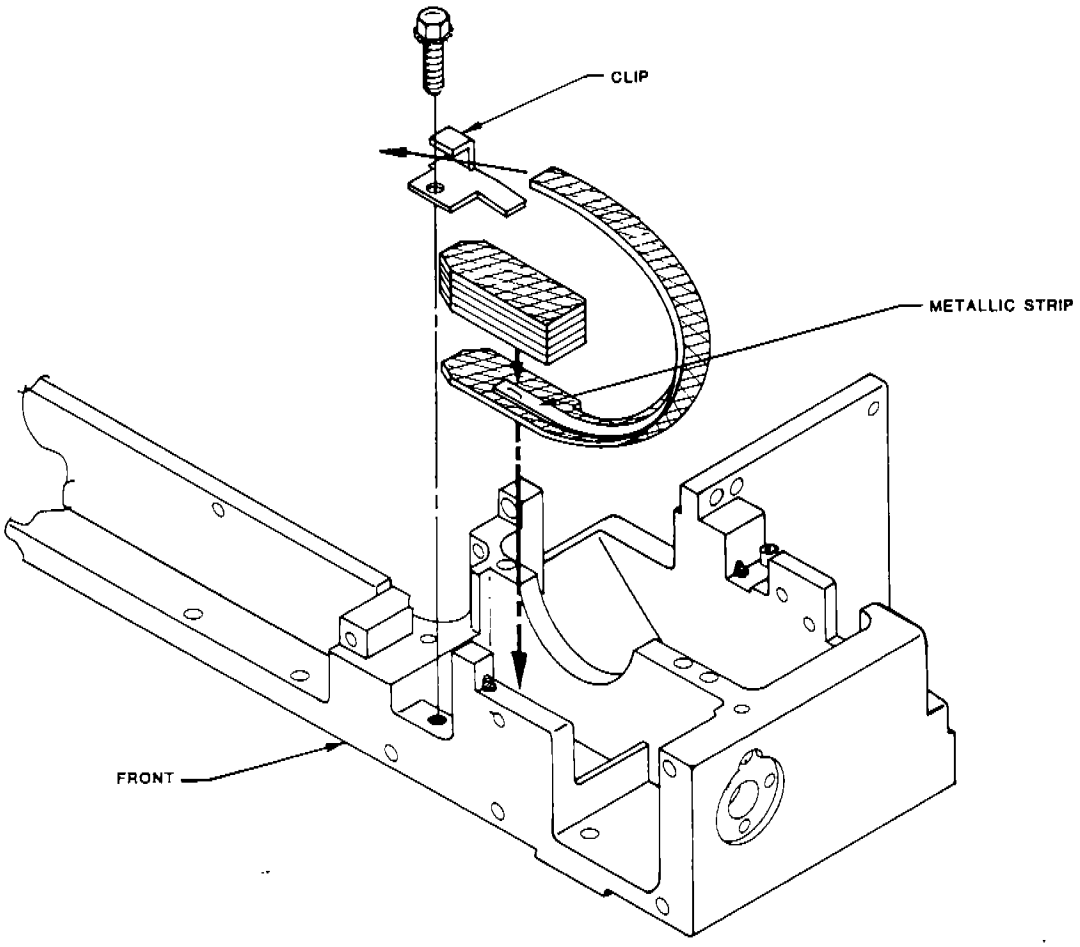

FIGURE 3-15.
WICK ASSEMBLY

3.0 PREVENTIVE AND CORRECTIVE MAINTENANCE

3.23 FLYWHEEL ASSEMBLY

The Flywheel Assembly may need to be replaced because of worn bearings, galled or worn cam, or a damaged timing disk.

To remove the Flywheel Assembly proceed as follows:

1. Remove the power cord.

2. Remove the Counterweight Assembly per Section 3.22.

3. Remove the cam cover bracket and its two screws.

4. Loosen the screw behind the MPU arm about a quarter inch. Back the MPU arm away from the flywheel as far as the support plate allows (Figure 3-16).

● CAUTION ●

DO NOT DISTURB THE MPU CLAMP SCREW AS THIS WILL AFFECT MPU GAP ADJUSTMENT.

5. Remove the screws holding each end of the flywheel shaft.

6. Lift the Flywheel Assembly and slip the shuttle belt off the flywheel rim past the rear flywheel shaft. Remove the Flywheel Assembly.

NOTE: If the cam or cam followers are galled and worn, replace the wick per Section 3.24.

3.0 PREVENTIVE AND CORRECTIVE MAINTENANCE

3.23 FLYWHEEL ASSEMBLY (Continued)

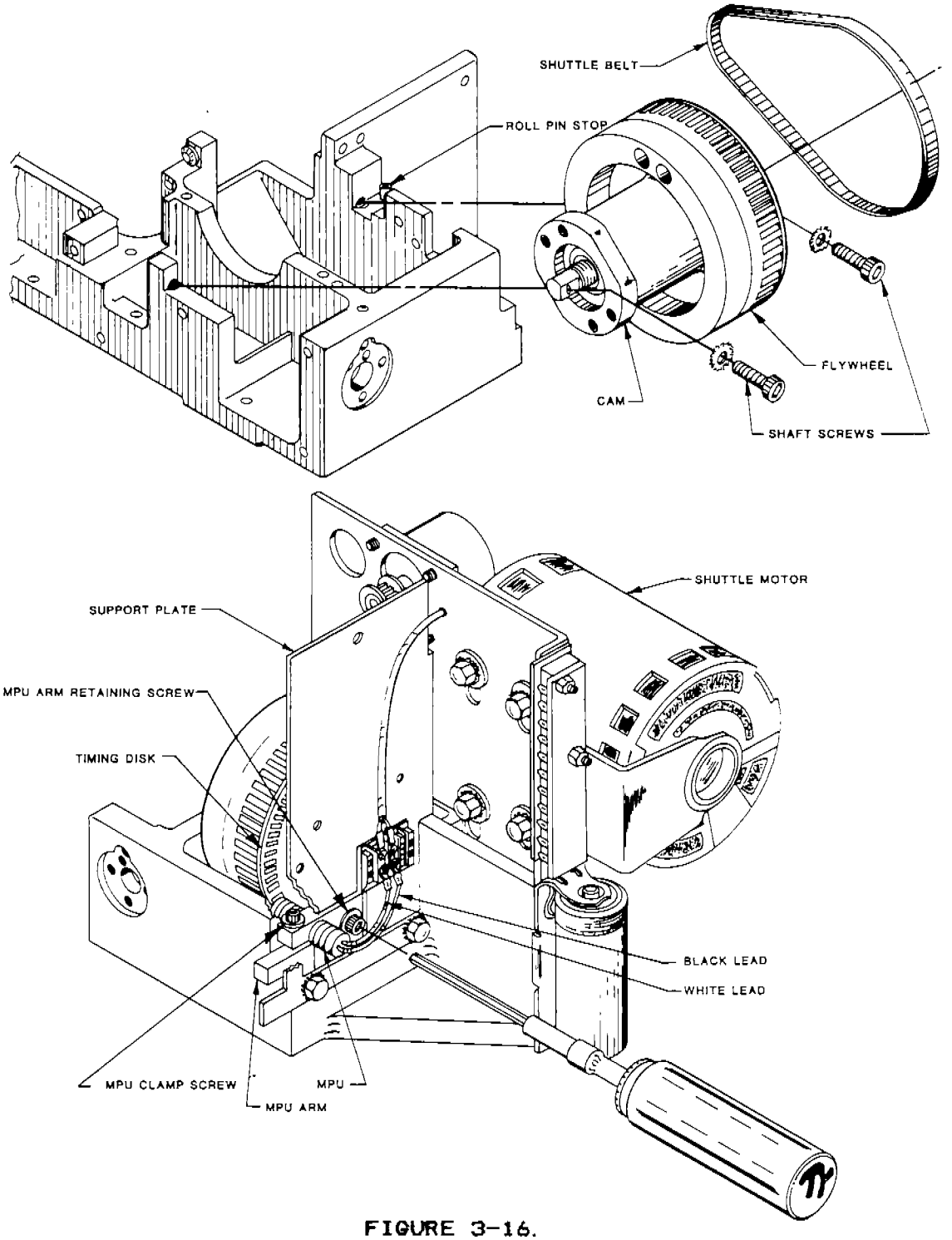

FIGURE 3-16.
FLYWHEEL ASSEMBLY AND MPU ASSEMBLY DETAILS

3.0 PREVENTIVE AND CORRECTIVE MAINTENANCE

3.23 FLYWHEEL ASSEMBLY (Continued)

To replace the Flywheel Assembly, perform the following steps.

1. Lift the new flywheel into position, slipping the shuttle belt over the rear shaft and onto the flywheel rim. Be sure that the belt teeth engage the grooves in the pulley.

2. Position the rear of the flywheel shaft against the roll pin stop in the main casting. Verify that the flats on the axle shaft are up to 45° and the axes of the cam's high lobes are vertical. Insert the shaft screws into each end of the flywheel shaft and tighten them into the casting.

3. Rotate the flywheel a few turns to align the shuttle belt with the shuttle motor pulley.

4. Replace the Counterweight Assembly per Section 3.22. Do not replace the cam cover bracket, the cam cover, cam cover plate or the gaskets at this time.

5. Position the MPU arm in its normal operating position and hand tighten the screw behind the MPU arm. Adjust the MPU per Section 3.25.

● CAUTION ●

DO NOT ROTATE THE FLYWHEEL PRIOR TO MPU GAP ADJUSTMENT. THE MPU AND TIMING DISK MAY BE DESTROYED IF THE ROTATING DISK CONTACTS THE MPU.

6. Check the shuttle belt tension per Section 3.29. Adjust the belt tension, if necessary.

7. Check the cam oiling wick to be sure it is in contact with the cam and properly lubricated per Section 3.24.

8. Replace the cam cover bracket, the cam cover, the cam cover plate and the gaskets.

3.0 PREVENTIVE AND CORRECTIVE MAINTENANCE

3.24 CAM WICK

To remove and replace the cam wick, proceed as follows:

1. Remove the Flywheel Assembly per Section 3.23.

2. Remove the screw and the clip that hold the cam wick in place (Figure 3-15). Remove the wick and discard.

3. Use a heavy cloth moistened with ispropyl alcohol to thoroughly remove all metal shavings from the counterweight assembly and flywheel assembly areas.

4. Wipe, brush, and vacuum the rest of the printer's interior.

5. Remove the replacement wick and its pads from the package; then arrange them per Figure 3-15. Place the wick in place and reinstall its screw and clip.

3.25 MAGNETIC PICKUP ASSEMBLY

- REMOVAL AND REPLACEMENT

To replace the Magnetic Pickup (MPU), remove the power cord and proceed as follows:

1. Remove the printer cover per Section 3.5.

2. Loosen the clamp screw on the upper surface of the MPU arm so that the MPU may be rotated.

3. Disconnect the MPU leads from terminals 1 and 2 on the adjacent terminal strip (Figure 3-16).

4. Unscrew the MPU from the hole in the MPU arm and remove it from the printer.

5. Screw the new MPU into the hole until its face is approximately ½ turn from the surface of the timing disk.

6. Connect the MPU's white lead to terminal 1 and the black lead to terminal 2 of the terminal strip on the right side plate.

7. Adjust the MPU per part B, below (Figure 3-17).

- ADJUSTMENT

There are two Magnetic Pickup adjustment procedures. The first procedure establishes the gap between the MPU and the timing disk. The second sets timing (phasing) so that dots printed in adjacent dot rows (during alternate shuttle movements) are vertically aligned.

3.0 PREVENTIVE AND CORRECTIVE MAINTENANCE

3.25 MAGNETIC PICKUP ASSEMBLY (Continued)

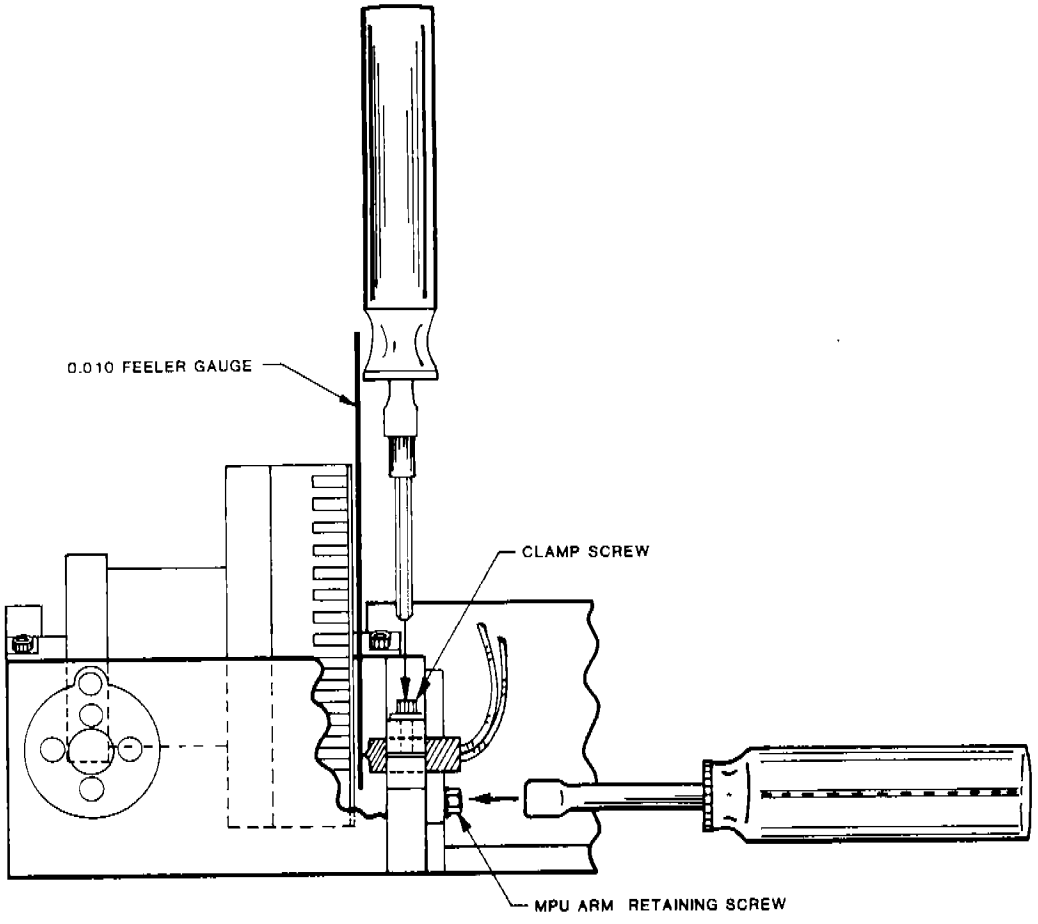

FIGURE 3-17.
ADJUSTING THE MPU ASSEMBLY

3.0 PREVENTIVE AND CORRECTIVE MAINTENANCE

3.25 MAGNETIC PICKUP ASSEMBLY (Continued)

To adjust the gap between the MPU and the timing disk, proceed as follows:

1. Loosen the clamp screw on the upper surface of the MPU so that the MPU may be rotated in its threads.

2. Insert the 0.010 inch feeler gauge between the pickup and timing disk (Figure 3-17). Adjust the gap between the MPU and the timing disk to 0.010 inches by rotating the MPU arm. Tighten the clamp screw.

● CAUTION ●

AFTER ADJUSTING THE MPU GAP, BE CERTAIN THAT THE MPU IS LOCKED IN PLACE BEFORE THE FLYWHEEL IS TURNED. THE MPU AND TIMING DISK MAY BE DESTROYED IF THE ROTATING DISK CONTACTS THE MAGNETIC PICKUP.

3. Connect the oscilloscope between Pin 2 of the adjacent terminal strip and ground. Verify that the output of the MPU is between 2.0 and 3.5 V p-p (Figure 3-18).

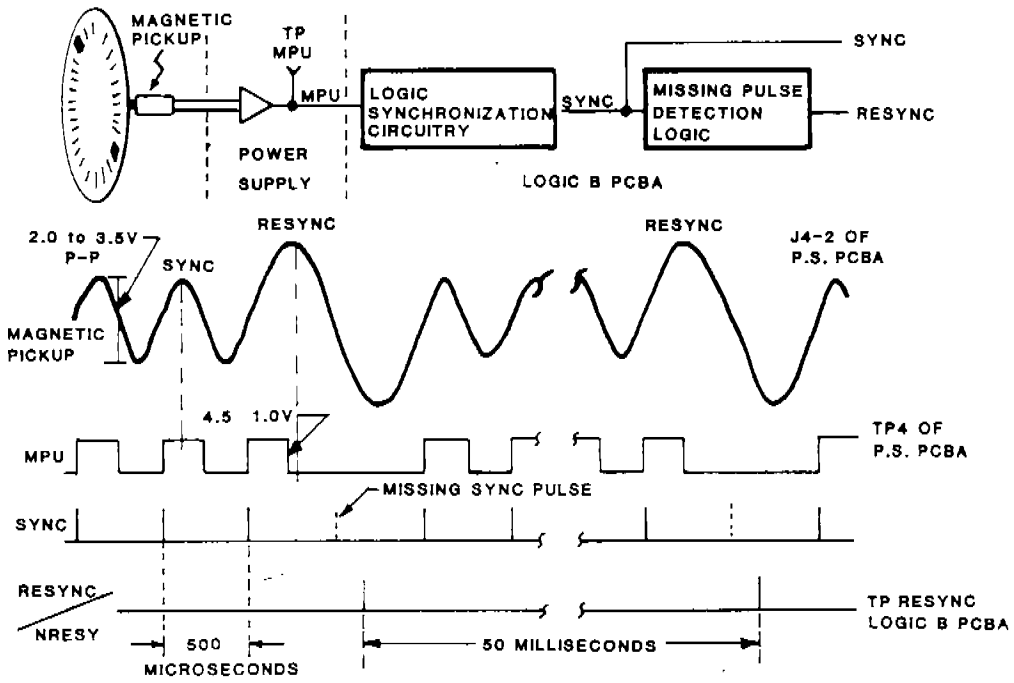

FIGURE 3-18.
MPU WAVEFORMS

3.0 PREVENTIVE AND CORRECTIVE MAINTENANCE

3.25 MAGNETIC PICKUP ASSEMBLY (Continued)

To adjust the hammer phasing, first set the MPU gap and then perform the following steps:

1. Loosen the screw behind the MPU arm slightly (Figure 3-17) so that the arm does not swing freely but can be manually pivoted through a vertical arc with some pressure applied.

2. Load the printer with 14-7/8 inch wide, single part paper. Connect the Exerciser to the interface connector. Set the Exerciser switches as follows:

- Line Length = 132
- Character = H
- Special = none
- Function = LF
- Polarity = LO if jumper W7 on Logic A PCBA is installed; HI if W7 is not installed.

NOTE: If no Exerciser is available, the Self-Test pattern may be run at the control panel. Alternately, the host computer may be used.

3. Press the ON LINE switch and observe the relative horizontal position of dots in alternate rows. Rotate the MPU arm until the dots in succeeding rows are aligned within .005 inch (Figure 3-19).

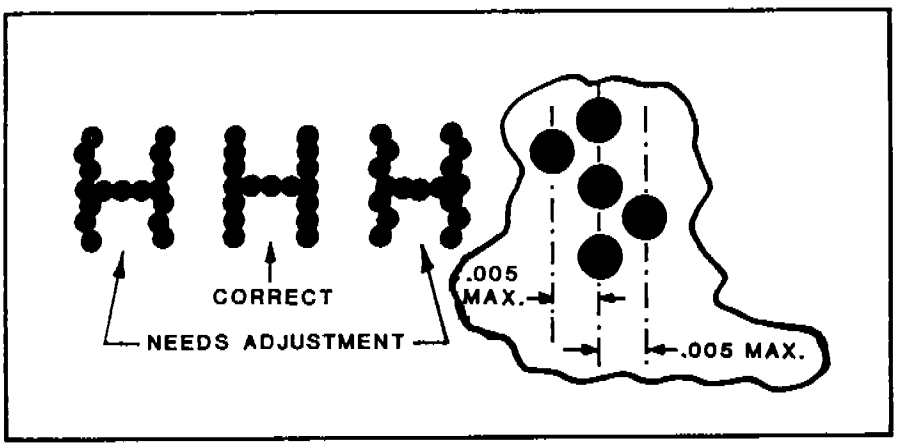

FIGURE 3-19.
DOT COLUMN OFFSET

3.0 PREVENTIVE AND CORRECTIVE MAINTENANCE

3.25 MAGNETIC PICKUP ASSEMBLY (Continued)

NOTE: Use any long shafted tool as a pry bar for making the adjustment. Insert the pry bar in the bracket straddling the end of the MPU arm.

4. When phasing is correct, tighten the holding screw at the rear of the MPU arm. Recheck the dot alignment after tightening. Sometimes tightening can cause a minor displacement of the MPU arm.

3.26 SHUTTLE MOTOR

To remove the shuttle motor or to change the shuttle motor pulley, remove the power cord and proceed as follows:

NOTE: When changing the pulley to adapt the printer to operate on a different line frequency, refer to information in Section 3.28 for correct line frequency part numbers.

1. Remove the printer cover per Section 3.5.

2. Remove the two screws and star washers retaining the cam Cover. Wipe off any metal chips left by the star washers. Remove the cover and its gasket.

3. Loosen the four screws that hold the shuttle motor to its mount, permitting the motor to lower to the bottom of the screw slots (Figure 3-20).

4. Slip the shuttle belt off the shuttle motor pulley.

5. Remove the cover from the terminal strip located on the right side plate. Remove the motor leads including the ground lead.

6. Remove the four screws and washers from the motor mount while supporting the weight of the shuttle motor.

7. Remove the motor by moving it rearward until it clears the paper feed motor. Lift it upward and out of the printer.

To replace the shuttle motor, reverse the removal procedures. When connecting the motor wires, be sure that the labeled leads are connected to the same numbered terminals on the terminal strip. Reconnect the motor ground lead to its terminal.

3.0 PREVENTIVE AND CORRECTIVE MAINTENANCE

3.26 SHUTTLE MOTOR (Continued)

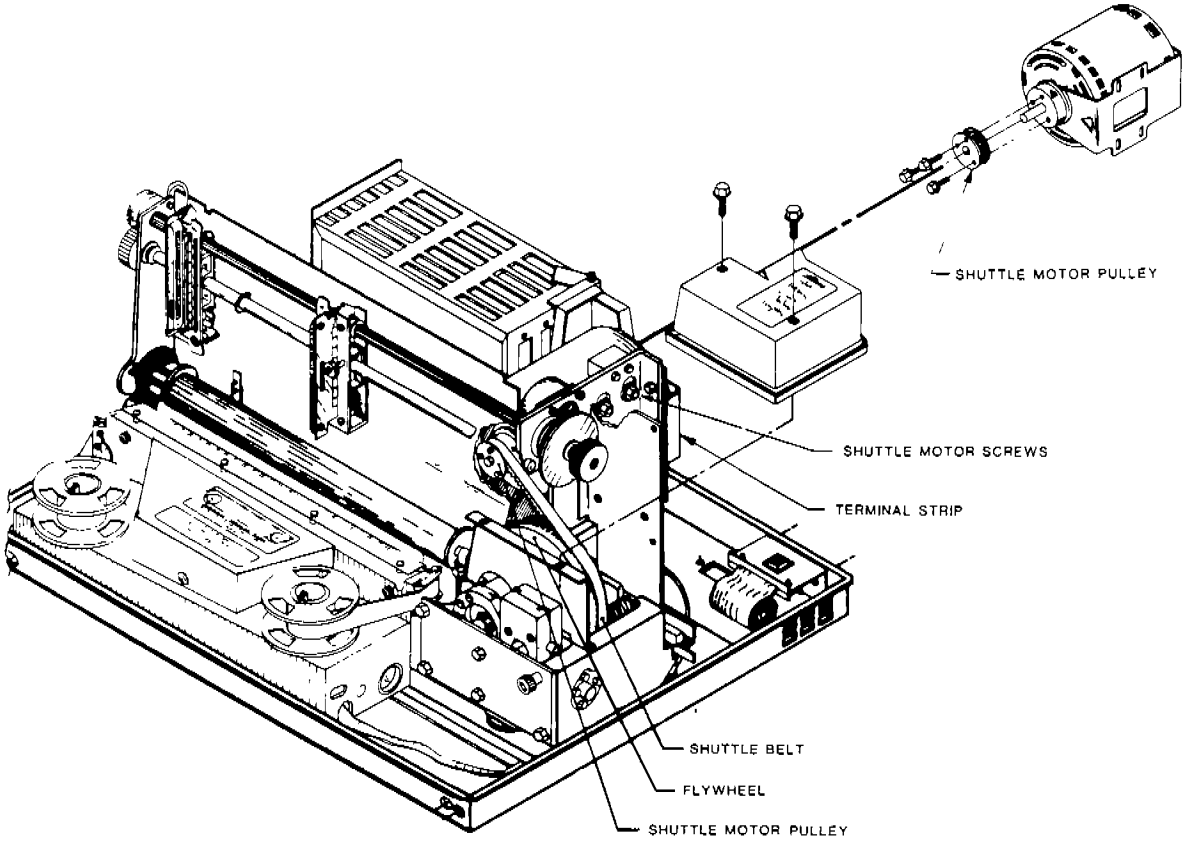

FIGURE 3-20.
REMOVING THE SHUTTLE MOTOR

3.0 PREVENTIVE AND CORRECTIVE MAINTENANCE

3.27 SHUTTLE MOTOR PULLEY

To remove and replace the shuttle motor pulley, proceed as follows:

1. Remove the shuttle motor per section 3.26.

2. Remove the three screws and star washers that hold the pulley assembly to the face of the shuttle motor pulley adapter (attached to the motor shaft).

3. Remove the pulley from the end of the motor shaft.

4. Slip the new pulley onto the motor shaft.

5. Align the screws in the pulley with those in the adapter. Reinstall and tighten the three screws and star washers removed in Step 1 above.

Following the replacement of the shuttle motor or the shuttle motor pulley, adjust the shuttle belt tension per Section 3.29.

3.28 ADAPTING THE PRINTER FOR LINE FREQUENCY

If the printer is configured for either 50 Hz or 60 Hz line power but is to be operated in a site supplying power at the other frequency, the Shuttle Motor Pulley Assembly must be replaced per Section 3.27 in order to maintain shuttle timing relationships.

Be sure that correct parts are installed, as follows:

PULLEY PART NUMBER	FREQUENCY
102737	50 Hz
102337	60 Hz

3.0 PREVENTIVE AND CORRECTIVE MAINTENANCE

3.29 SHUTTLE BELT

When the shuttle belt has become worn, cracked, broken or damaged, it must be replaced and adjusted.

● REPLACEMENT

To replace the shuttle belt:

1. Remove the screws and washers holding the cam cover. Wipe off any metal chips left by the star washers. Remove the cover and its gasket.

2. Loosen the screw behind the MPU arm and turn the MPU arm away from the flywheel as far as the support plate allows (Figure 3-15).

● CAUTION ●

DO NOT DISTURB THE MPU CLAMPING SCREW.
AS THIS WILL AFFECT MPU ADJUSTMENT.

3. Remove the shaft retaining screws from each end of the flywheel shaft.

4. Lift out the Flywheel Assembly and the shuttle belt.

5. Remove the belt from the shuttle motor pulley. Make sure the pulley is not loose on the shaft.

6. Install the new belt onto the shuttle motor pulley and over the flywheel rim, being sure the belt teeth are aligned with the grooves in the pulley and the flywheel.

7. Position the rear end of the flywheel shaft against the roll pin in the main casting (Figure 3-15). Verify that the flats on the flywheel shaft are up at 45 degrees and that the axes of the cam's high lobes are vertical. Insert the shaft screws into each end of the flywheel shaft and tighten them into the casting.

8. Rotate the flywheel a few turns to align the belt with the shuttle motor pulley.

9. Check the belt tension per part B, below. Adjust if necessary.

10. Reposition the MPU arm and adjust the MPU per Section 3.24.

3.0 PREVENTIVE AND CORRECTIVE MAINTENANCE

3.29 SHUTTLE BELT (Continued)

- ADJUSTING THE SHUTTLE BELT TENSION

The shuttle belt must be tensioned correctly when mounted on the shuttle motor pulley and the flywheel. The belt should appear taut and deflect approximately ¼ inch under finger pressure. To adjust the belt for correct tension, proceed as follows:

1. Loosen the screws that hold the shuttle motor to the mount.

2. Adjust the motor up or down until the shuttle belt is correctly tensioned.

3. Do not allow the motor to tip down the pulley end. Tighten the mounting screws.

3.30 PAPER FEED MECHANISM

The paper feed mechanism includes the paper feed motor and pulley, the paper feed belt, the Spline Shaft Assembly and its pulley, the vertical forms adjustment controls, two tractors, and the support shaft (Figure 3-21).

3.31 PAPER FEED BELT

- REPLACEMENT

To replace the paper feed belt, proceed as follows:

1. Remove the power cord and open the printer cover.

2. Loosen the set screw in the bushing at the left end of the spline shaft. Remove the bushing.

3. Slide the spline shaft and the belt to the right until the spline shaft bearing is free of the right side plate (Figure 3-21).

NOTE: If the belt tension is so great that the shaft cannot be moved far enough to disengage the bearing from its recess in the left side plate, slacken the tension by loosening the screws that hold the paper feed motor.

4. Remove the paper feed belt from the paper feed motor pulley. Slip the belt over the end of the spline shaft and forms adjustment disk.

5. Press the spline shaft bearing against the right side plate, but do not seat it. Route the new belt onto the spline shaft pulley and the paper feed motor pulley.

3.0 PREVENTIVE AND CORRECTIVE MAINTENANCE

3.31 PAPER FEED BELT (Continued)

6. Slide the spline shaft and its bearing back to the left. Seat them in the right side plate. Replace the bushing on the shaft, allowing an axial clearance between the bushing and the left side plate of 0.001 to 0.005 inch.

7. Align the paper feed motor pulley with the spline shaft pulley. Center the paper feed belt on the motor pulley.

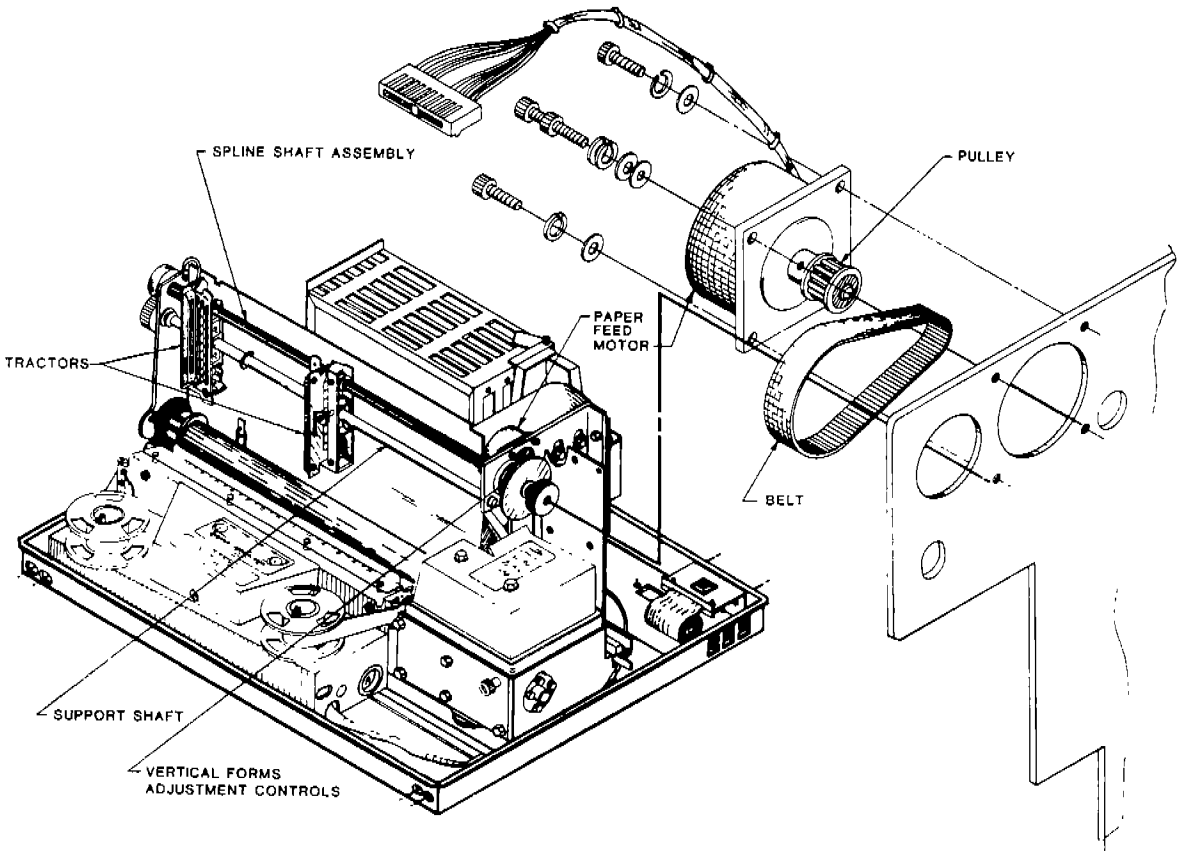

FIGURE 3-21.
REMOVING THE PAPER FEED MOTOR

3.0 PREVENTIVE AND CORRECTIVE MAINTENANCE

3.31 PAPER FEED BELT (Continued)

8. Tighten the set screw in the bushing making sure the set screw is perpendicular to the flat on the spline shaft.

9. Check the tension of the paper feed belt and adjust, if necessary, per the instructions below.

● ADJUSTMENT

The paper feed belt must be tensioned correctly between the paper feed motor pulley and the spline shaft pulley. The belt should have a 1/16 inch deflection midway between the pulleys when pressed at that point (Figure 3-22). To adjust the belt tension:

1. Remove the printer cover per section 3.5.

2. Loosen the four screws holding the paper feed motor to its mount.

3. Adjust the motor position to either loosen or tighten the belt for the 1/16 inch deflection. Make sure the belt is centered on the small pulley. Tighten the motor mounting screws.

● CAUTION ●

DO NOT USE A PRY BAR TECHNIQUE BETWEEN THE PAPER FEED MOTOR BASE PLATE AND SPLINE SHAFT BEARING RACE. THE STRESS REQUIRED TO TENSION THE BELT COULD EASILY DAMAGE THE SPLINE SHAFT BEARING OR THE SHAFT.

4. Replace the printer cover per section 3.5.

3.32 PAPER FEED MOTOR

● REPLACEMENT

To remove the paper feed motor, remove the printer cover per section 3.5; then perform the following steps (Figure 3-21):

1. Disconnect the paper feed motor cable from the Power Supply PCBA.

2. Cut the cable ties holding the motor cable in the bundle.

3. Remove the four screws and star washers holding the paper feed motor. Slip the paper feed belt off the motor's pulley.

4. Remove the paper feed motor and its cable.

3.0 PREVENTIVE AND CORRECTIVE MAINTENANCE

3.32 PAPER FEED MOTOR (Continued)

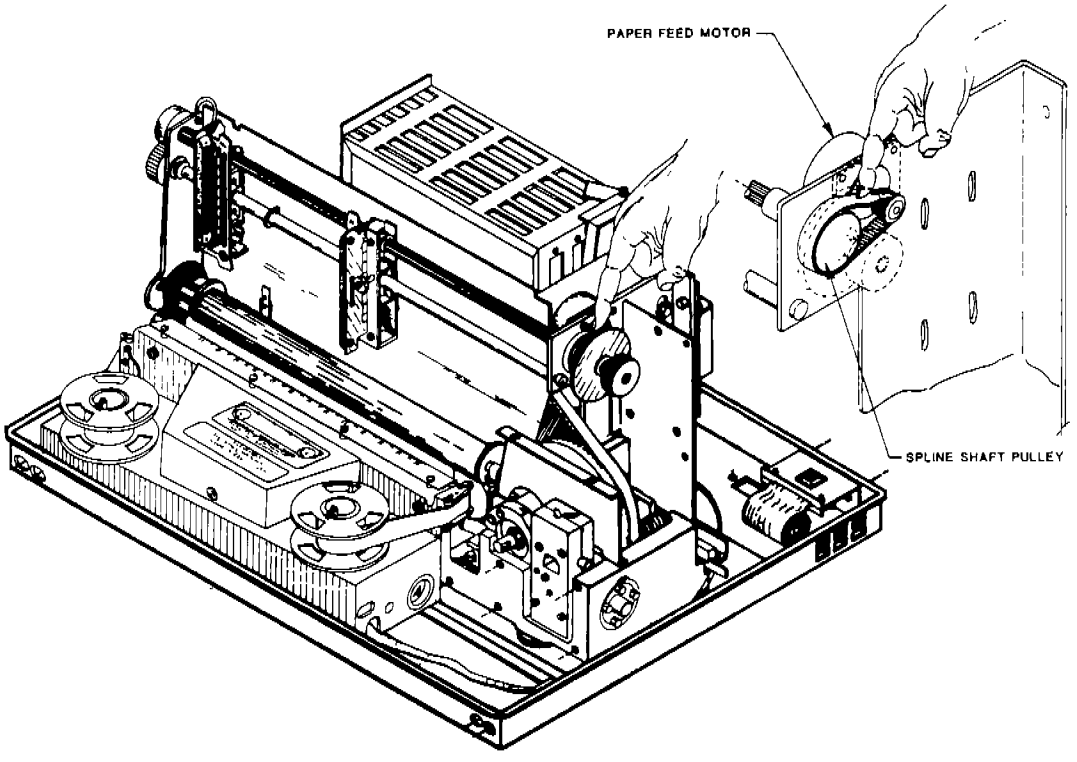

FIGURE 3-22.
ADJUSTING THE PAPER FEED BELT

3.0 PREVENTIVE AND CORRECTIVE MAINTENANCE

3.32 PAPER FEED MOTOR (Continued)

To replace the motor, reverse the removal procedure. Then perform the belt adjustment per section 3.30 and reinstall the printer cover per section 3.5.

3.33 PAPER TRACTORS

- REMOVAL AND REPLACEMENT

1. Remove the power cord from the printer.

2. Remove the paper from the printer. Loosen both knurled tractor clamping nuts.

3. Loosen the set screw in the bushing on the left end of the spline shaft and remove the bushing.

4. Remove the screw and washers that secure the support shaft to the knob center (Figure 3-23); then unscrew the support shaft until it is free from the knob center.

5. Slide the spline shaft to the right until its left end is clear of the tractor to be removed. Remove the paper feed belt, if necessary.

NOTE: If the right tractor is to be changed, remove the spline shaft from the printer; then lift out the support shaft and the two tractors as a unit.

6. When removing the left tractor, proceed as follows:

   a. Remove the Paper Motion Sensor Assembly per Section 3.34.

   b. Remove the cable clamps that secure the Paper Motion Sensor Cable Assembly to the tractor before taking the left tractor out of the printer.

   c. Replace the cable ties after replacing the tractor.

7. Slide the tractor to be replaced off the free end of the support shaft. Slide the new tractor onto the free end of the shaft.

NOTE: Be sure to align the two tractors in coordination with each other on the spline shaft. A notched sprocket pin is found on each tractor to assist in this alignment.

8. Put the support shaft back in place in the printer and screw the threaded end into the knob center.

3.0 PREVENTIVE AND CORRECTIVE MAINTENANCE

3.33 PAPER TRACTORS (Continued)

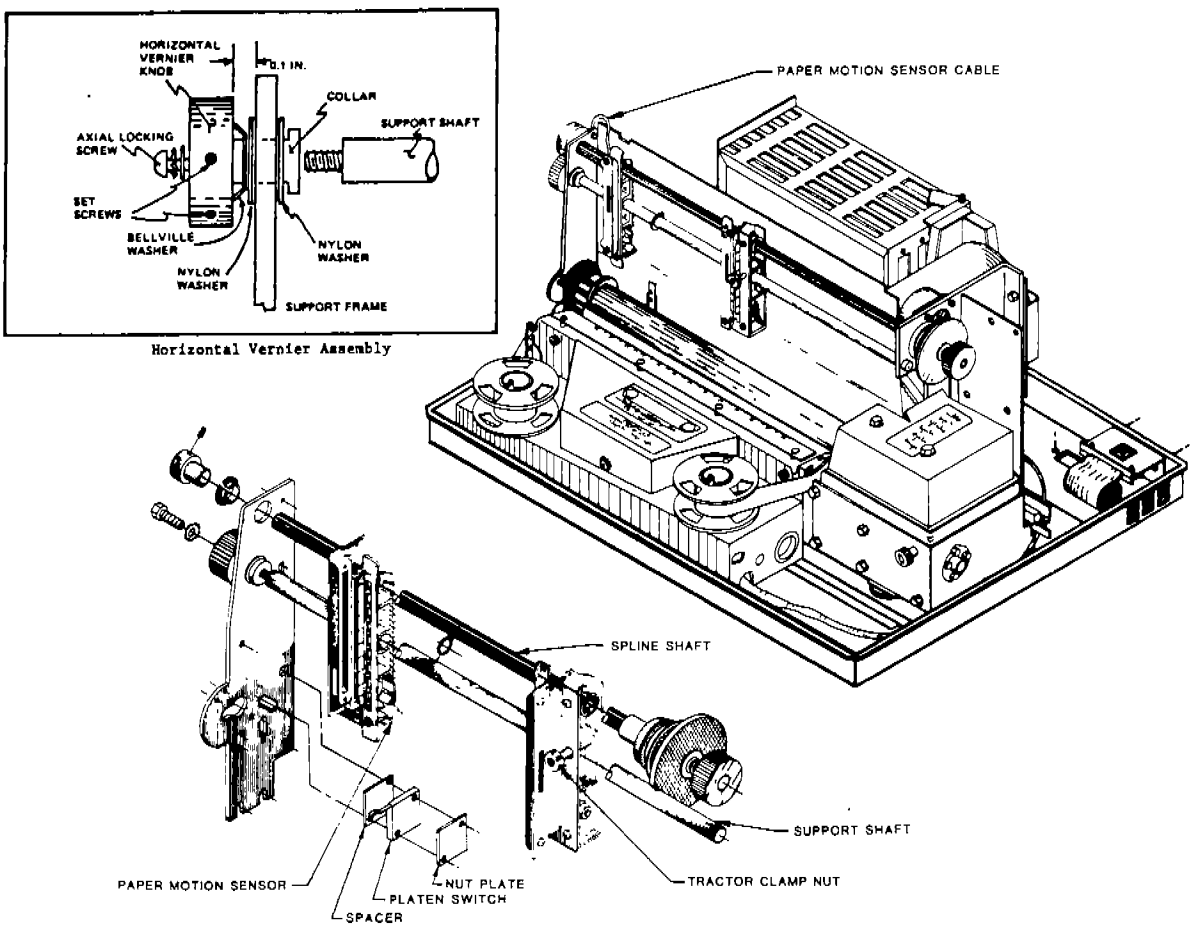

FIGURE 3-23.
PAPER TRANSPORT DETAILS

3.0 PREVENTIVE AND CORRECTIVE MAINTENANCE

3.33 PAPER TRACTORS (Continued)

9. Insert the spline shaft in both tractors so that the same tooth is at both sprocket pin notches.

10. Slip the paper feed motor belt onto the motor pulley and the spline shaft pulley.

11. Slide the spline shaft to the left and seat the bearing. Replace the bushing on the left end of the spline shaft. Allow an axial clearance between the bushing and the support frame of 0.001 inch to 0.005 inch.

12. Align the paper feed motor pulley with the spline shaft pulley. Center the paper feed belt on the motor pulley.

13. Install the screw and washers on the end of the support shaft; then tighten them.

14. Check the tension of the paper feed belt and adjust, if necessary, per Section 3.31.

15. Verify that the paper tractors are parallel on the shafts and adjust, if necessary.

- TRACTOR SHOE GATE ADJUSTMENT

If the gap between the tractor shoe gate and frame is not correctly set, paper may bind in the tractor, especially during high speed slew operations (Figure 3-24). Check the gap and adjust if necessary, performing the following steps:

1. Remove the paper from the printer.

2. Insert a 0.035 inch feeler gauge between the tractor shoe and frame, being careful not to lift the shoe with the gauge.

3. Adjust the screw at each end of the tractor shoe (Figure 3-24), so that the gap is 0.035 inch +0.005/-0.000 inch at both ends of the tractor shoe. Adjust the screws clockwise to increase the gap or counterclockwise to decrease the gap.

If the tractor continues to bind after the tractor shoe adjustment, the tractor should be replaced.

3.0 PREVENTIVE AND CORRECTIVE MAINTENANCE

3.34 PAPER MOTION SENSOR ASSEMBLY

- REMOVAL AND REPLACEMENT

If the Paper Motion Sensor Assembly fails the output and functional tests below, it must be replaced.

To remove the Paper Motion Sensor Assembly, proceed as follows:

1. Remove the power cord and the paper from the printer.

2. Remove the screw and washers that secure the support shaft to the knob center.

3. Unscrew the support shaft and remove from the left tractor (Figure 3-24).

4. Tip the left tractor upward and remove the nut and star washer that hold the plastic connector retainer to the left tractor.

5. Remove the retainer and unplug the connector from the sensor.

6. Loosen the two screws that hold the sensor assembly alignment bracket to the tractor. Remove the bracket and sensor.

NOTE: If the left tractor is to be replaced, remove and retain the two screws.

To replace the Paper Motion Sensor Assembly, reverse the removal procedures and adjust as indicated below.

- CHECKING THE SENSOR

If the Paper Motion Sensor Assembly is connected to a bad paper motion detector circuit or has low output, the CHECK lamp may light each time paper is slewed.

To check the paper motion detector circuit, proceed as follows:

1. Verify that jumper W6 on the Logic B PCBA is in place.

2. Load the paper and run a number of Top-of-Form operations.

3. Set the Exerciser to Self-Test. Print a few pages of the pattern.

If the CHECK indicator does not light during either of these tests, the sensor and circuit are good.

3.0 PREVENTIVE AND CORRECTIVE MAINTENANCE

3.34 PAPER MOTION SENSOR ASSEMBLY (Continued)

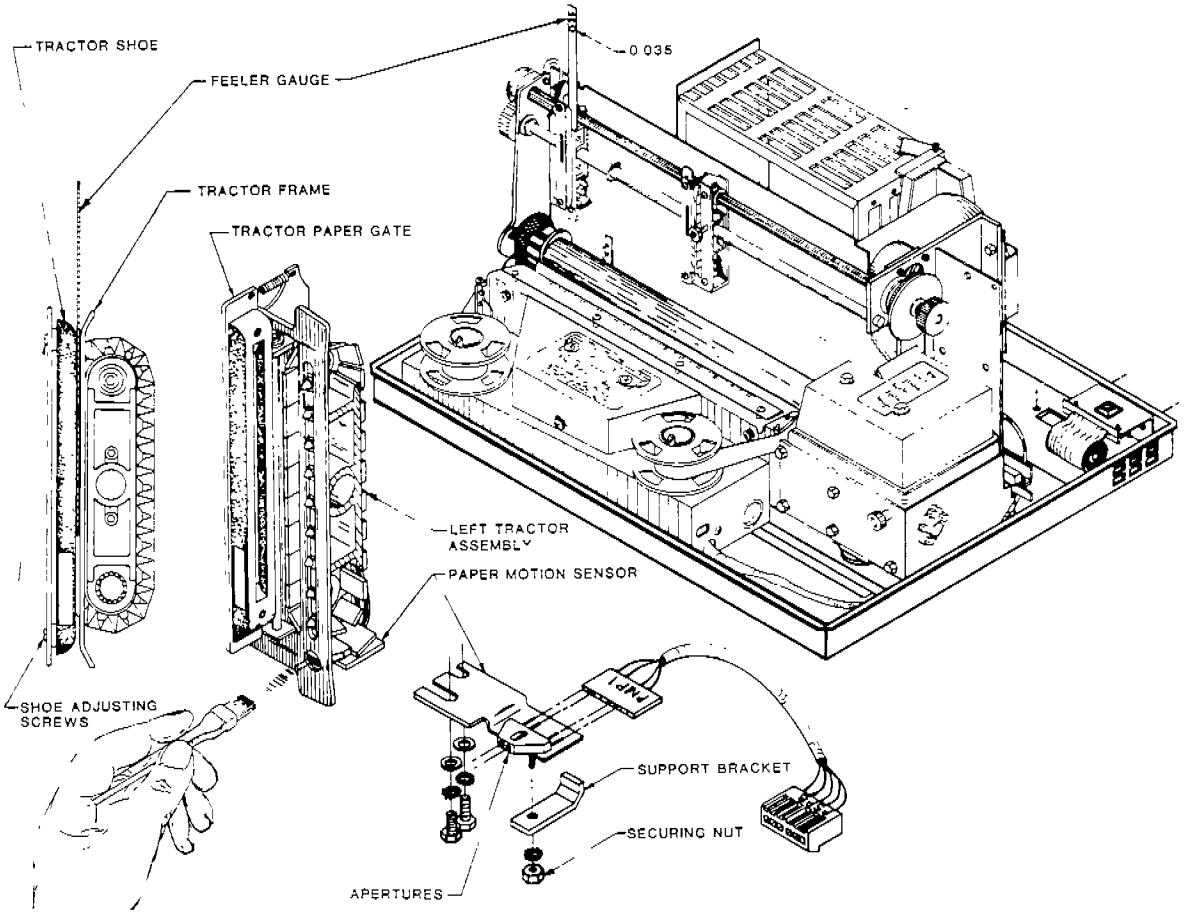

FIGURE 3-24.
SERVICING THE PAPER TRACTOR

3.0 PREVENTIVE AND CORRECTIVE MAINTENANCE

3.34 PAPER MOTION SENSOR ASSEMBLY (Continued)

To check the position of the sensor proceed as follows:

1. Remove the paper from the printer and open the gate on the left tractor to expose the sensor in its alignment bracket. Both apertures in the sensor must be completely visible through the opening at the bottom of the tractor frame (Figure 3-24).

To check the output of the sensor:

1. Remove the paper from the printer.

2. Measure the voltage at capacitor C12 on the Power Supply PCBA. The voltage should be near zero.

3. Position a piece of white paper in front of the sensor apertures. The voltage at capacitor C1 should be at least 150 millivolts (sinusoidal). Adjust the position of the sensor if the voltage at C1 is less than 150 millivolts. If the voltage cannot be achieved by adjusting the sensor position, replace the sensor in accordance with the instructions above.

- ADJUSTMENT

If both aperatures are not completely visible:

1. Remove the support shaft per section 3.33, steps 4 through 6.

2. Tip up the left tractor and loosen the two retaining screws on the sensor.

3. Reposition the sensor and tighten the sensor retaining screws.

4. Reinstall the support shaft and its nut and washers.

3.0 PREVENTIVE AND CORRECTIVE MAINTENANCE

3.35 PAPER OUT DETECTORS

The P300 uses a mechanical switch or an optical sensor for paper out detection. This section provides mechanical switch removal, replacement, operational check, and adjustmentck, and procedures. Optical sensor removal and replacement procedures are also included.

- MECHANICAL SWITCH REMOVAL AND REPLACEMENT

1. Remove the power cord and remove paper from the printer.

2. Remove the printer cover per Section 3.5.

3. Remove the two screws (see Figure 3-25) that hold the rear of the Power Supply Assembly to the printer base; then slide the Power Supply Assembly toward the rear of the printer, as far as possible.

4. Disconnect cable connector PSP5 from the mating connector on the Power Supply PCBA. Cut all the cable ties holding the cable to the printer.

5. At the front of the Belt Cover Assembly, remove the two screws that hold the switch assembly to the belt cover.

6. Rotate the lower end of the switch assembly through the hole in the belt cover. Remove the switch assembly and its cable through the rear of the the belt cover.

7. Install the new paper out switch assembly, reversing the removal procedures. Be sure to route the cable correctly and replace the cable ties.

8. Adjust the mechanical paper out switch as indicated below.

- MECHANICAL SWITCH OPERATIONAL CHECK

Check operation of the paper out switch by demonstrating that paper motion stops when:

1. The Forms Thickness Adjustment lever is in the Load position with paper loaded, or

2. Paper runs out at the platen while the lever is in any operating position between 1 and 6.

NOTE: If the paper out delay is functional (jumper between E13 and E14 on the Logic B PCBA), paper motion will not cease immediately but will continue for 12 lines (2 inches) after CHECK is detected.

3.0 PREVENTIVE AND CORRECTIVE MAINTENANCE

3.35 PAPER OUT DETECTORS (Continued)

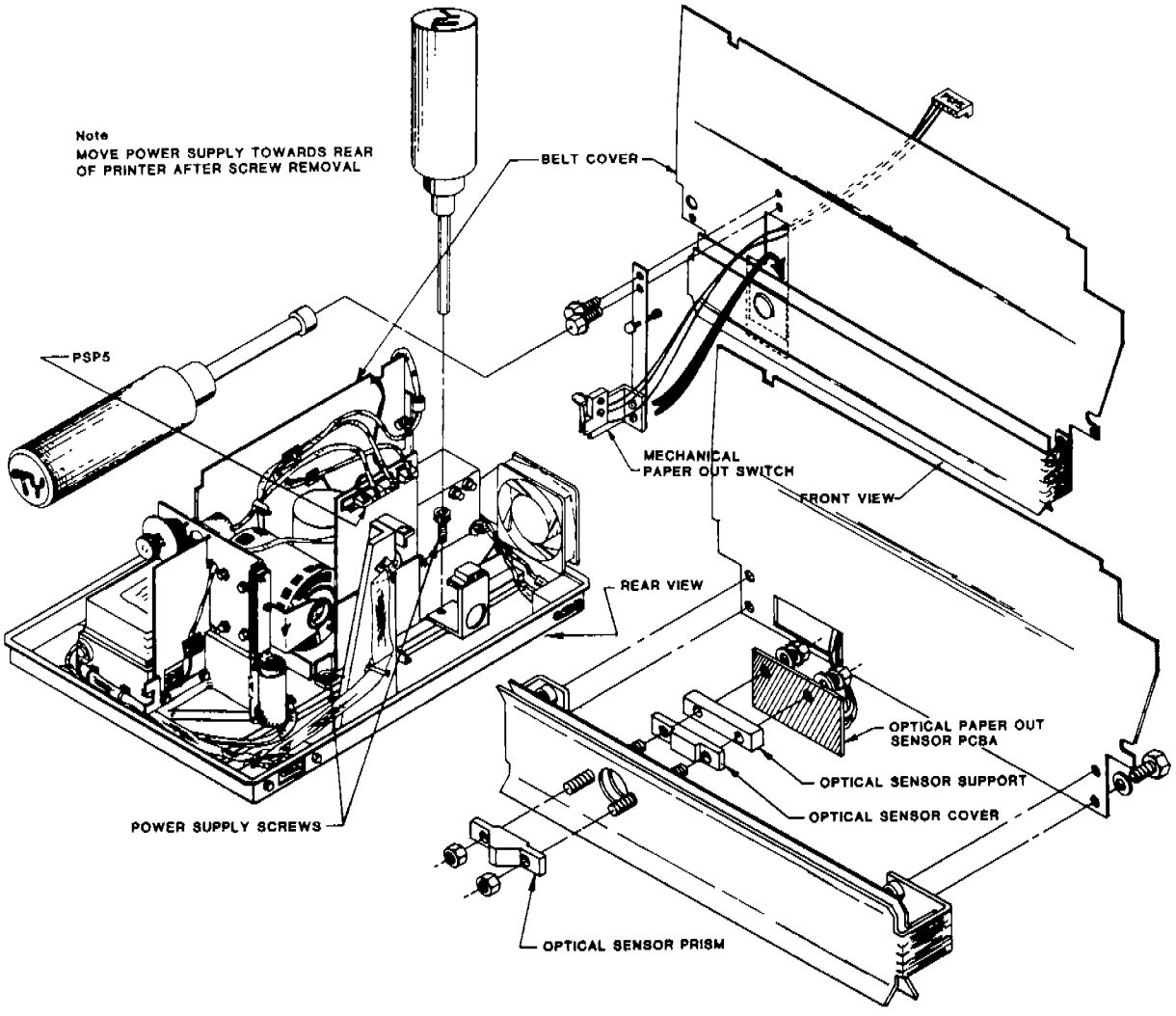

FIGURE 3-25.
REMOVING THE PAPER OUT SWITCH

3.0 PREVENTIVE AND CORRECTIVE MAINTENANCE

3.35 PAPER OUT DETECTORS (Continued)

- MECHANICAL SWITCH ADJUSTMENT

To adjust the switch, perform the following steps.

1. With the printer power on and the paper in the printer, set the Forms Thickness Adjustment lever to position 1.

2. Rotate the nylon button shaft so that its tip is between 0.010 and 0.020 inch from the platen surface (Figure 3-26).

3. Set the Forms Thickness Adjustment lever so that the pointer is between ¼ inch and ½ inch from position 6, toward the Load position.

4. Rotate the nylon button shaft clockwise until the CHECK indicator turns off (if it is on); then turn it counterclockwise until the CHECK indicator lights.

- OPTICAL SENSOR REMOVAL AND REPLACEMENT

1. Remove the power cord and the paper supply from the printer.

2. Remove the printer cover per Section 3.5.

3. Remove the two screws that hold the rear of the Power Supply Assembly to the printer base; then slide the Power Supply Assembly toward the rear of the printer, as far as possible.

4. Disconnect cable connector PSP5 from the mating connector on the Power Supply PCBA. Cut all the cable ties holding the cable to the printer.

5. At the rear of the Belt Cover Assembly, remove the two screws and washers that hold the Optical Paper Out Sensor PCBA, the optical sensor support, and the optical sensor cover to the optical paper guide (Figure 3-26). Lift out the PCBA, the support, and the cover.

6. At the front of the paper guide, remove the two screws that hold the optical sensor prism to the guide. Lift out the prism.

To replace the optical paper out sensor, reverse the removal procedure.

3.0 PREVENTIVE AND CORRECTIVE MAINTENANCE

3.35 PAPER OUT DETECTORS (Continued)

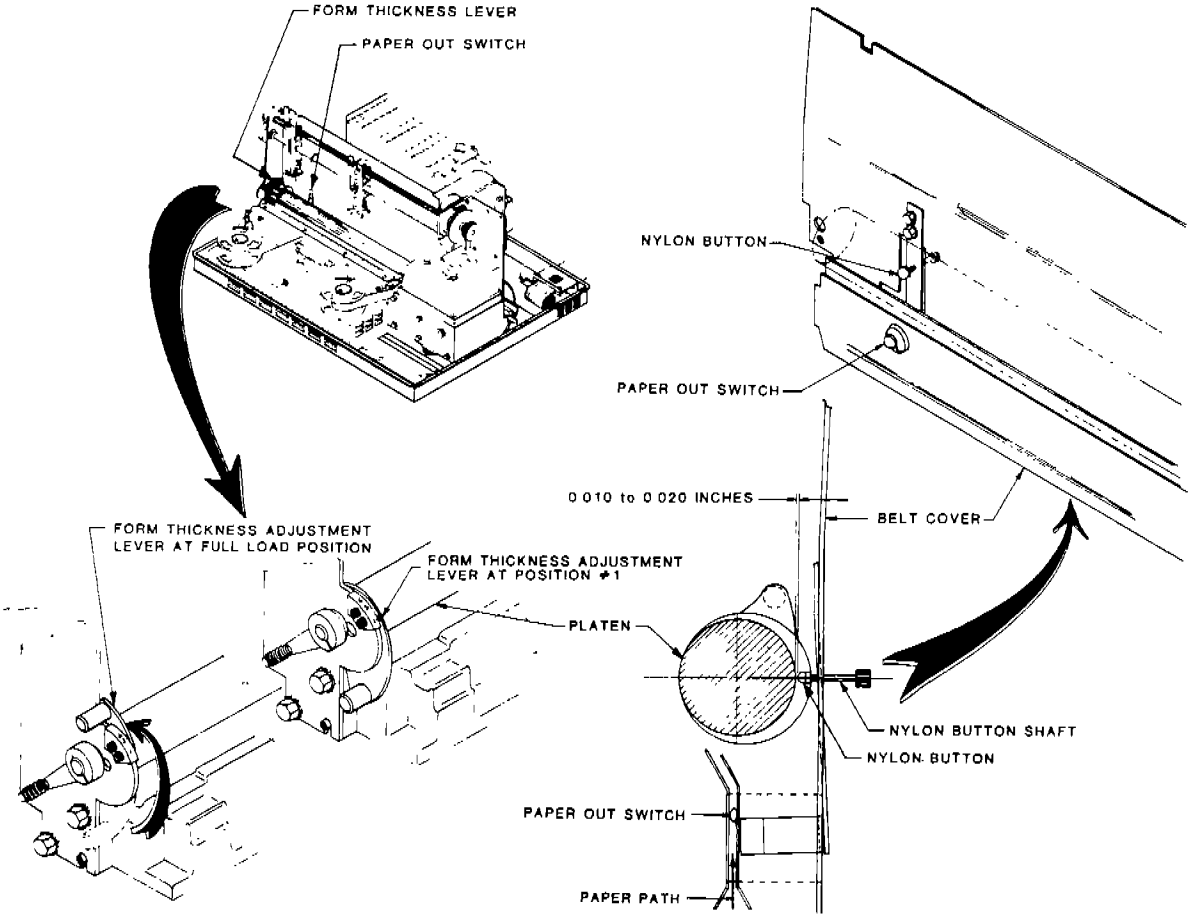

FIGURE 3-26.
ADJUSTING THE PAPER OUT SWITCH

3.0 PREVENTIVE AND CORRECTIVE MAINTENANCE

3.36 PLATEN OPEN SWITCH

- PLATEN OPEN SWITCH REMOVAL

1. Remove the power cord and the paper supply from the printer. Close the Forms Thickness Adjustment lever.

2. Remove the printer cover per Section 3.5.

3. Remove the two screws and washers that hold the Platen Open Switch, its spacer, and nut plate in place on the left side plate (Figure 3-23).

4. Disconnect the switch cable connectors from the switch, then lift the switch out.

- PLATEN OPEN SWITCH REPLACEMENT

1. Reverse removal steps 3 and 4.

2. Position the switch so that the Forms Thickness Adjustment lever activates the switch at a point 3/4 to 1 inch above the 6 part mark. Tighten both retaining screws.

3. Reinstall the cover, paper supply, and power cord.

3.37 POWER SUPPLY ASSEMBLY

The power supply circuits include components mounted directly on the Power Supply Assembly chassis as well as those on the Power Supply PCBA. The cooling fan and the ac power switch are also mounted on the chassis. There are three categories of component replacement: fuses, PCBA components, and chassis mounted components. The next group of sections begin by explaining power supply voltage checks, followed by procedures for the removal of components in each of these categories.

The Power Supply PCBA may be removed from the power supply chassis with the printer cover and the chassis in place. Other maintenance procedures (except fuse replacement) require the removal of either the printer cover per section 3.5 or the Power Supply Assembly per section 3.40.

Testing Power Supply Voltages.

Test the power supply voltages as follows:

3.0 PREVENTIVE AND CORRECTIVE MAINTENANCE

3.37 POWER SUPPLY ASSEMBLY (Continued)

1. Turn on ac power (normal line voltages).

2. With ambient temperature near +25°C, paper installed in the printer, the Exerciser connected, and the Forms Length

Adjustment lever set to turn off the CHECK indicator, attach the common lead of the digital voltmeter to ground on the Power Supply PCBA.

a. At the Logic B PCBA measure:

+5 V ± 0.25 V (T.P. +5 V)
-12 V ± 1.2 V (T.P. -12 V)

b. At the Power Supply PCBA, measure:

+8 V ± 1.0 V
+28 V ± 1.0 V
-30 V (-40 V to -28.5 V)

3. If all voltages are within tolerances, turn off the ac power and restore the printer to normal operation.

If the power supply voltages are out of tolerance, troubleshoot and repair the power supply circuits.

3.38 REPLACING THE DC SUPPLY FUSES

Fuses for the dc power supplies are held in clips on the lower part of the Power Supply PCBA and are accessible when the card cage has been swung open. Fuses are fast blow types (Figure 3-27, top to bottom) as follows:

FUSE	TYPE	SUPPLY VOLTAGE
F1	8AFB	+8 V
F2	3AFB	-30 V
F3	3AFB	+28 V

● WARNING ●

AS A GENERAL SAFETY PRECAUTION, BE SURE TO REMOVE THE POWER CORD BEFORE HANDLING THE FUSES ON THE POWER SUPPLY PCBA. NOT ALL PRINTERS HAVE BLEEDER RESISTORS INSTALLED. IF NO BLEEDER RESISTOR IS INSTALLED, CONNECT A 1K, 10W RESISTOR BETWEEN THE POWER SUPPLY FILTER C1+ AND CHASSIS GROUND, AND ANOTHER 1K, 10W RESISTOR BETWEEN C3- AND CHASSIS GROUND WHILE WORKING ON THE SUPPLY.

3.0 PREVENTIVE AND CORRECTIVE MAINTENANCE

3.38 REPLACING THE DC SUPPLY FUSES (Continued)

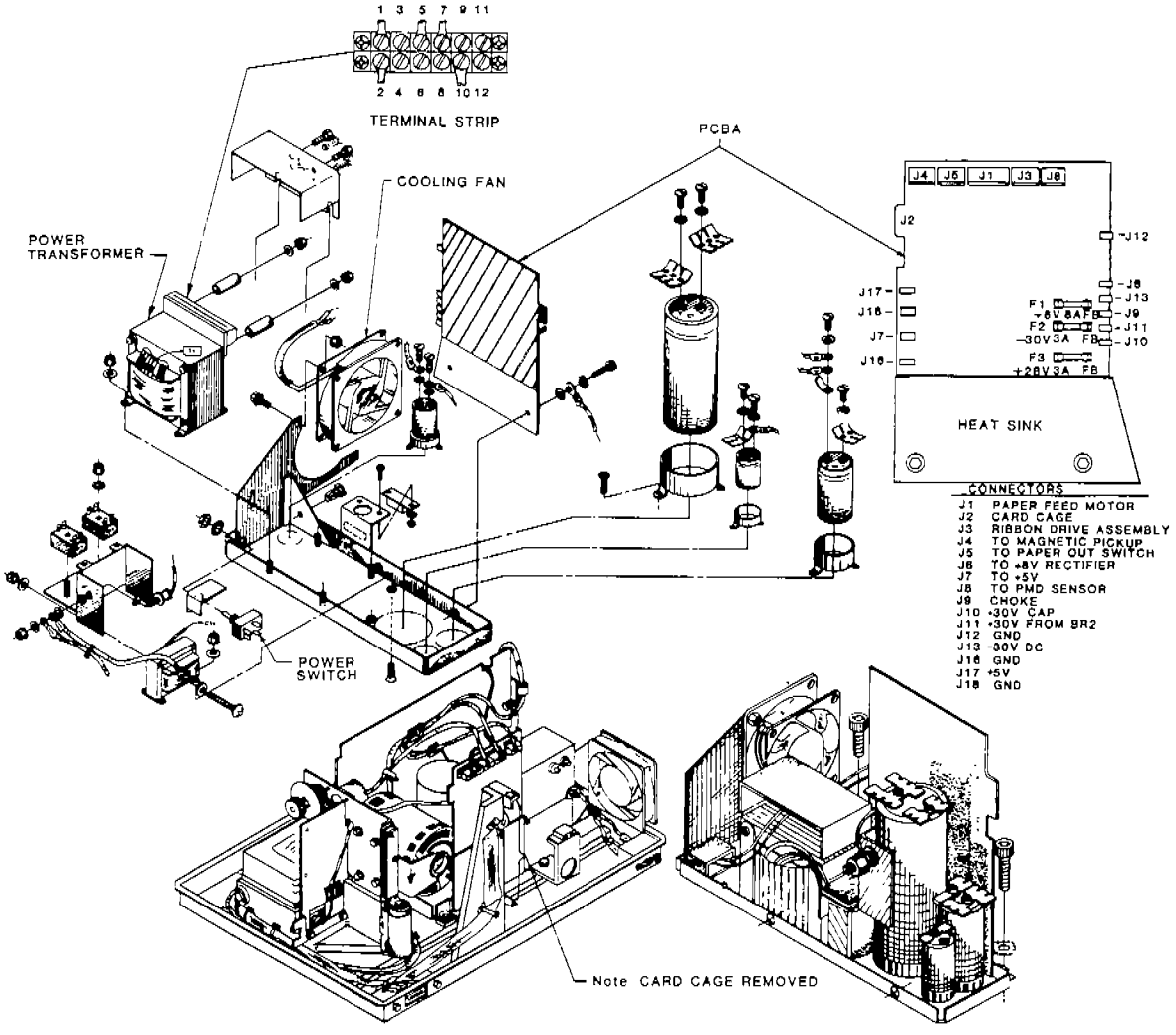

FIGURE 3-27.
POWER SUPPLY ASSEMBLY DETAILS

3.0 PREVENTIVE AND CORRECTIVE MAINTENANCE

3.39 REPLACING THE POWER SUPPLY PCBA

It is necessary to remove the Power Supply PCBA in order to replace components (other than fuses) on the PCBA (Figure 3-27).

To remove the PCBA, perform the following steps:

1. Disconnect the power cord form the back of the printer and wait five minutes for the supply to discharge. Observe the WARNING at the end of section 3.38.

2. Disconnect all Molex connectors from the top of the PCBA and remove ribbon cable connector J2 from the left edge of the PCBA.

3. Disconnect the wires from all quick disconnect terminals on the PCBA. Note that wire identification matches the numerals identifying terminals on the PCBA.

4. Remove the two screws at the lower edge of the heat sink and remove the Power Supply PCBA.

To replace the PCBA, reverse the removal procedures.

3.40 REPLACING THE POWER SUPPLY ASSEMBLY

A failure in the power supply that is not caused by a component on the Power Supply PCBA will usually necessitate removal of the entire Power Supply Assembly.

To remove the Power Supply Assembly proceed as follows:

1. Open the rear door.

2. Swing open the printed circuit card cage.

3. Disconnect all cables from the top and left edges of the Power Supply PCBA.

4. Remove the two screws and washers that hold the Power Supply Assembly chassis to the base pan.

5. Disconnect the quick disconnect terminals on the ac line filter at the rear of the printer. Mark the wire terminals so they will not be reversed in reassembly.

6. At the larger (+28 V) chassis mounted filter capacitor, disconnect the wires (C1+ and C1-) that go to the Hammer Driver PCBA and the Hammerbank Assembly.

7. Loosen the nuts retaining the power transformer cover. Lift the cover to expose the wiring.

3.0 PREVENTIVE AND CORRECTIVE MAINTENANCE

3.40 REPLACING THE POWER SUPPLY ASSEMBLY (Continued)

8. Disconnect the wires at transformer terminals T1-1 and T1-7 going to the Ribbon Drive Assembly. Return the transformer cover to its closed position.

9. Lift the rear of the Power Supply Assembly; pull it toward the door and slightly left, being careful not to hit the ac power switch against the cabinet. Remove the assembly through the door.

To replace the Power Supply Assembly, reverse the removal procedure.

3.41 REAR COOLING FAN

Remove and replace the rear cooling fan as follows:

1. Remove the power cord from the printer.

2. Remove the printer cover per Section 3.5.

3. Remove the nut and washer at the left rear of the transformer cover and loosen the nut at the right rear of the cover.

4. Lift off the transformer cover to expose the terminal strip at the rear of the transformer.

5. Loosen the screws at terminals T1-2 and T1-10 (numbered from the left end) and remove the fan motor wires from the terminals (Figure 3-27).

6. Remove the three screws that hold the fan to the side of the chassis. Remove the fan.

To replace the fan, reverse the removal procedure.

3.42 CARD CAGE PCBAs

Before removing any PCBA from the card cage, remove the power cord. Lower the rear door; then swing open the card cage.

To remove either Logic PCBA remove the tie wrap, lift the ejector levers, and release the PCBA from its connectors. Withdraw the PCBA from the card cage. (Figure 3-3 illustrates this procedure.)

3.0 PREVENTIVE AND CORRECTIVE MAINTENANCE

3.42 CARD CAGE PCBAs (Continued)

If a Logic A PCBA or Logic B PCBA is to be replaced with a different version, refer to the P-Series User's Reference Manual for specific configuration information.

When the Logic A PCBA is replaced with the same version, remove the jumper platform, the terminations and the logic control PROMs. Install the removed parts in the same locations on the replacement PCBA.

When the Logic B PCBA is replaced with the same version, remove the PROMs and install them in the corresponding locations on the replacement PCBA.

To remove the Hammer Driver PCBA from the card cage, proceed as follows:

1. Discharge the 30 V power supply by placing a1K resistor across J4 and J5 on the Hammer Driver PCBA for one minute.

2. Disconnect the three wires terminated with quick disconnect terminals (J4 through J6) from the terminals on the PCBA (Figure 3-3).

3. Lift the ejector levers on the Hammer Driver PCBA to release the PCBA from its connectors; then remove the PCBA from the card cage.

To reinstall any PCBA in the card cage, insert the PCBA into its slot until its connector fingers engage the connectors. Press the board into the connectors by returning the ejector levers to their normal positions. Be sure to connect the three wires (J4 through J6) correctly to their respective terminals on the Hammer Driver PCBA.

● CAUTION ●

OBSERVE PCBA IDENTIFICATION ON THE OUTBOARD EDGE OF THE CARD CAGE. ANY LOGIC A OR LOGIC B PCBA CAN BE DAMAGED IF IT IS INSTALLED IN THE HAMMER DRIVE PCBA SLOT AND POWER IS APPLIED.

NEVER ATTEMPT TO FORCE A PCBA INTO THE CONNECTOR. WHEN USING A PCBA ON AN EXTENDER BOARD, DO NOT MOUNT THE PCBA UPSIDE DOWN. OBSERVE THE ORIENTATION THE PCBA WOULD HAVE IN THE CARD CAGE.

TROUBLESHOOTING PROCEDURES

CONTENTS

General	4.1
Troubleshooting Aids	4.2
CATEGORY 1: Failures Indicated At The Control Panel	4.3
CATEGORY 2: The Shuttle Does Not Time Out	4.4
CATEGORY 3: The Ribbon Does Not Feed Properly	4.5
CATEGORY 4: Interface Problems Between the Printer and the Host Computer	4.6
CATEGORY 5: Improper Printer Operation	4.7
CATEGORY 6: Paper Feed Mechanism Does Not Feed Properly	4.8
Performance Tests	4.9
Normal Printing Test (Sliding Pattern)	4.10
MPU Phasing Test (All "H's")	4.11
Print Unformity Test (Elongated "E's")	4.12
Vertical Hammer Alignment Test (Underline)	4.13
General Tests	4.14

FIGURES

Printer Functional Elements	4-1
Printer Preparation and Operation Checks Flow Chart	4-2
Power Indicator Will Not Light	4-3
Check Lamp is On	4-4
Printer Will Not Go Online	4-5
Shuttle Control Waveform Measurement Points	4-6
Ribbon Drive Assembly Circuits Flow Chart	4-7
Interface Functional Block Diagram	4-8
Printing Action Block Diagram	4-9
Missing Characters	4-10
Examples of Dropout	4-11
Example of Dragging Hammer	4-12
Print Density Requires Hammer Adjustment	4-13
Horizontal Hammer Alignment	4-14
Vertical Misalignment	4-15
Vertically Misformed Characters	4-16
Vertical Compression of Print	4-17
Paper Feed Logic Flow Chart	4-18
Sliding Pattern, All Upper and Lowercase Characters	4-19
Letter "H" (Test of MPU Phasing)	4-20
Letter "E" Elongated (Test of Print Uniformity)	4-21
Underlines (Test for Hammer Alignment, Vertical)	4-22
Recycle Pattern, Upper and Lowercase Characters	4-23
Uppercase Characters Row Increment	4-24
Self-Test	4-25

4.0 TROUBLESHOOTING PROCEDURES

4.1 GENERAL

Section Four provides information to locate and correct the cause of improper printer operation. Many problems can be remedied by replacing the Logic A PCBA, the Logic B PCBA, or the Hammer Driver PCBA. Poor print quality can be improved by adjustments of hammer alignment, hammer tip spacing, paper feed belt tension, and shuttle belt tension. The remaining problems can be caused by faulty printer mechanism assemblies or the interconnecting cables.

Become familiar with the contents of the Operator's Guide, the P-Series User's Reference Manual and this manual. Refer to Section Three of this Manual and Section Five, the Illustrated Parts Breakdown (IPB), for the location of parts to be replaced or adjusted. Perform the routine performance tests noted for the symptom following the completion of any repair or adjustment.

4.2 TROUBLESHOOTING AIDS

Figure 4-1 is a block diagram of printer components and their functions. By referring to the operations listed in the blocks for each PCBA, the circuit elements that contribute to the failure can be identified. Many operations are interdependent so more than one PCBA may be involved. A problem is often corrected by single PCBA substitution; however, a mechanical problem will usually require more symptom analysis.

Flow charts and failure categories are used in the Troubleshooting section.

The flow charts represent sequences of printer operation and possible failure symptoms. In each flow chart, a rectangle represents an action to be taken. A diamond contains a YES or NO question about the result of that action. If the event did not happen, there is a failure. By following the steps in the flow chart it is possible to locate the area causing the failure.

When seeking the cause of failure on the printer itself, first check the related connectors and disconnects to be sure they are secure. Next, check the dc voltages on the Power Supply PCBA. Finally, perform the operation in the NO branch of the expected event diamond that represents the symptom of this failure.

4.0 TROUBLESHOOTING PROCEDURES

4.2 TROUBLESHOOTING AIDS (Continued)

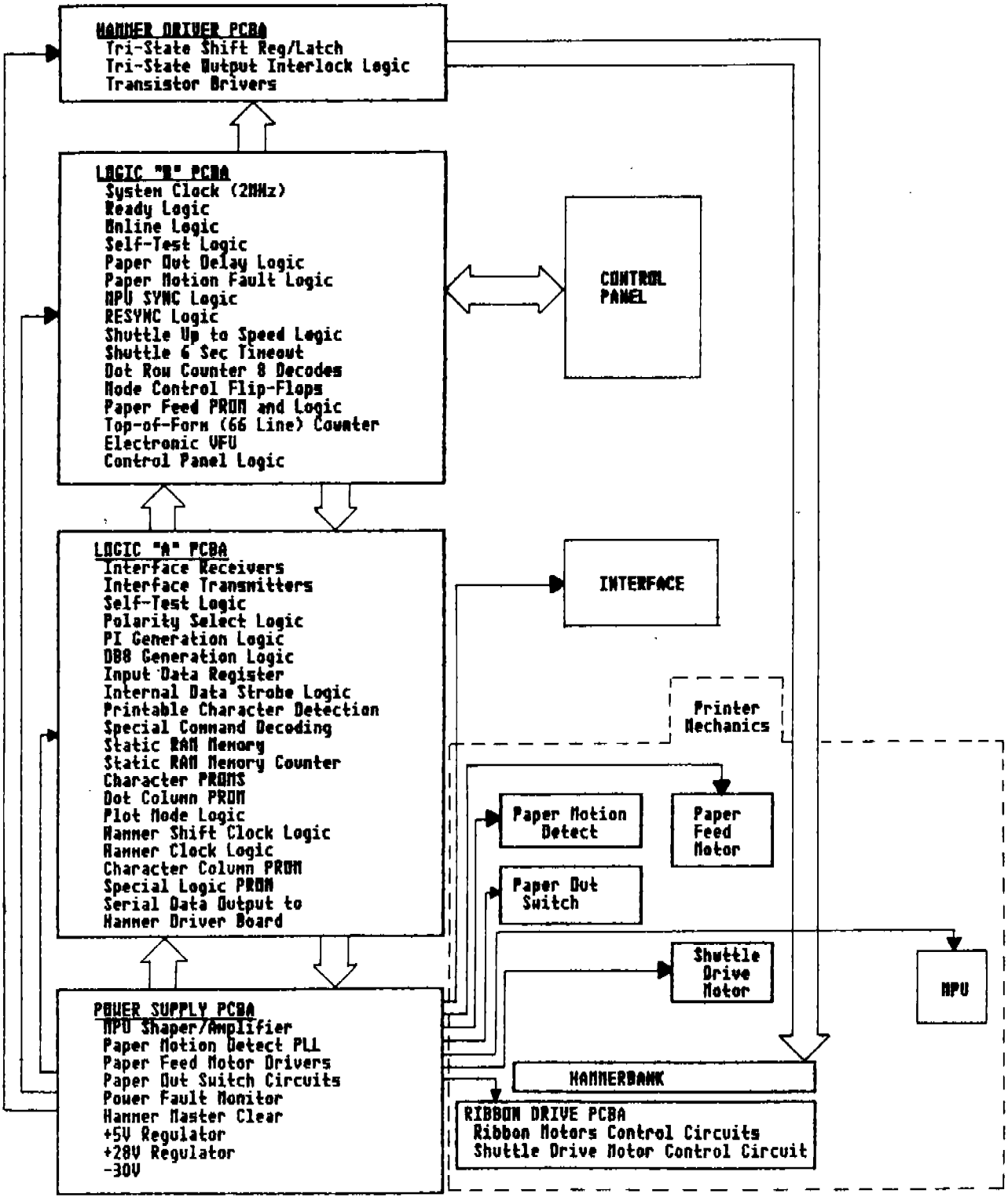

FIGURE 4-1.
PRINTER FUNCTIONAL ELEMENTS

4.0 TROUBLESHOOTING PROCEDURES

4.2 TROUBLESHOOTING AIDS (Continued)

Figure 4-2 is a flow chart for checking printer preparation and readiness. Flow charts illustrated in Figures 4-3, 4-4, 4-5, 4-7, 4-9 and 4-18 deal with specific printer problems.

Problems indicated by the control panel displays can be isolated using Figures 4-3 through 4-5. Paper feed, printing action, and ribbon motion problems can be located using Figures 4-7, 4-9, and 4-18. These three specific flow charts can be accessed from Figure 4-2, by using the Figure number references.

Included with the block diagrams and flow charts are troubleshooting instructions and performance tests.

Troubleshooting instructions are associated with the individual failure categories discussed below. Performance tests are grouped at the end of the section and referenced from the procedures.

Failure categories are set up to track the normal operating sequence. The categories are summarized as follows:

1. Failures indicated at the control panel.
2. The shuttle does not time out.
3. The ribbon does not feed properly.
4. Printer/host computer interface problems.
5. The printer does not print properly.
6. The paper feed mechanism does not feed properly.

Once the general problem area has been identified, detailed printer troubleshooting should start with a check of all related connecting devices to ensure that they are properly seated. Next, measure the dc voltage outputs of the Power Supply PCBA. Finally, follow the NO branch of the diamond and perform the actions described.

4.3 CATEGORY 1: FAILURES INDICATED AT THE CONTROL PANEL

SYMPTOM 1: POWER INDICATOR WILL NOT LIGHT

Make sure the printer is installed as explained in the User's Reference Manual. Set the Power Switch to the ON position; the Power Indicator should light. If it does not, see Figure 4-3.

SYMPTOM 2: CHECK LAMP IS ON

The CHECK lamp should not be on. If it is, see Figure 4-4.

4.0 TROUBLESHOOTING PROCEDURES

4.3 CATEGORY 1: FAILURES INDICATED AT THE CONTROL PANEL (Continued)

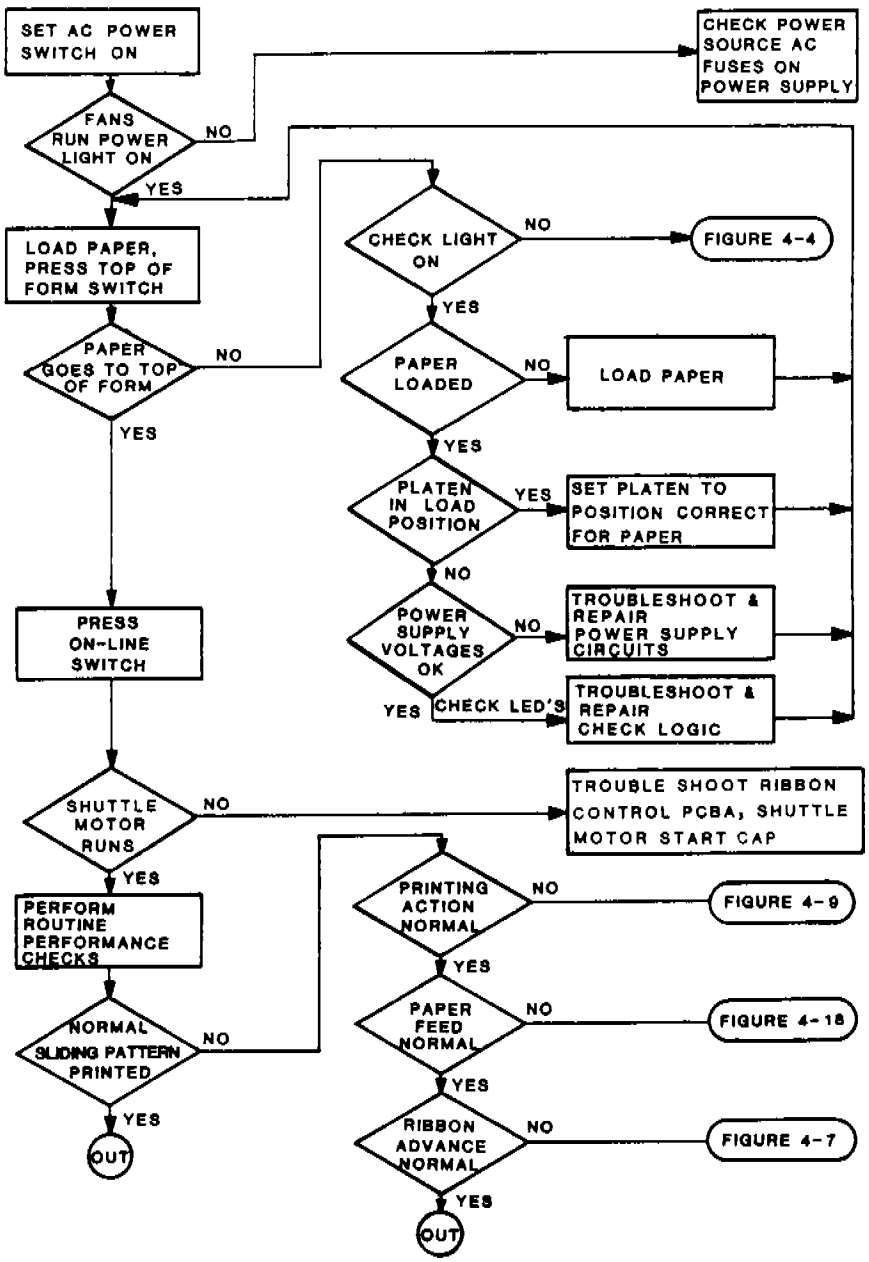

FIGURE 4-2.
PRINTER PREPARATION AND OPERATION CHECKS FLOW CHART

4.0 TROUBLESHOOTING PROCEDURES

4.3 CATEGORY 1: FAILURES INDICATED AT THE CONTROL PANEL (Continued)

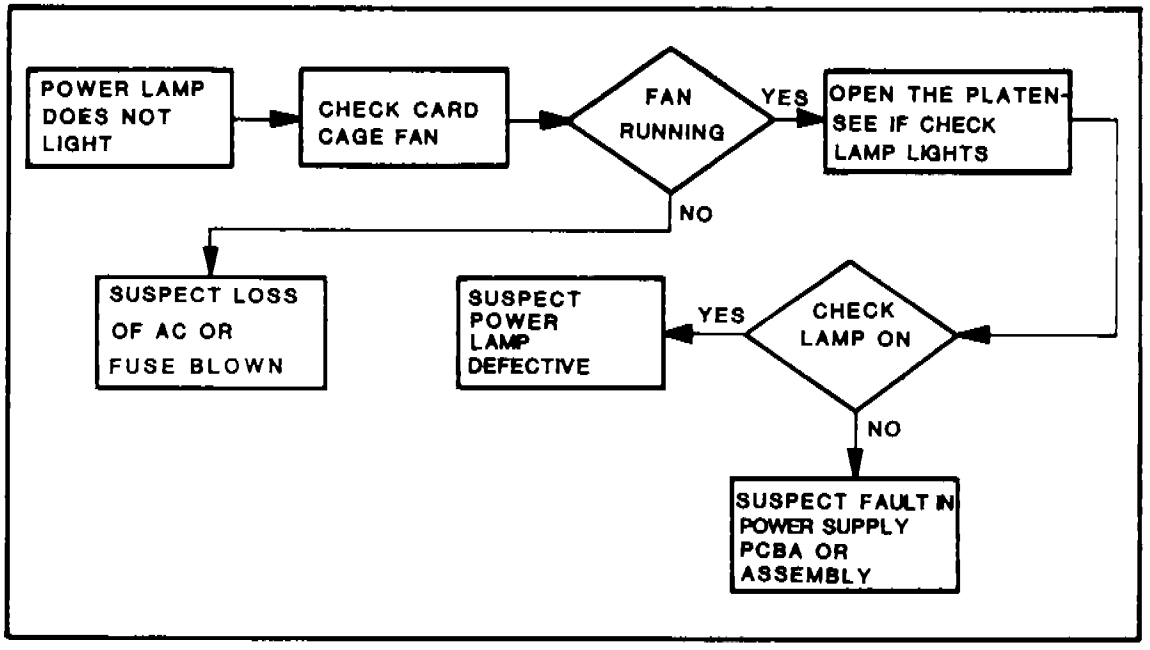

FIGURE 4-3.
POWER INDICATOR WILL NOT LIGHT

4.0 TROUBLESHOOTING PROCEDURES

4.3 CATEGORY 1: FAILURES INDICATED AT THE CONTROL PANEL (Continued)

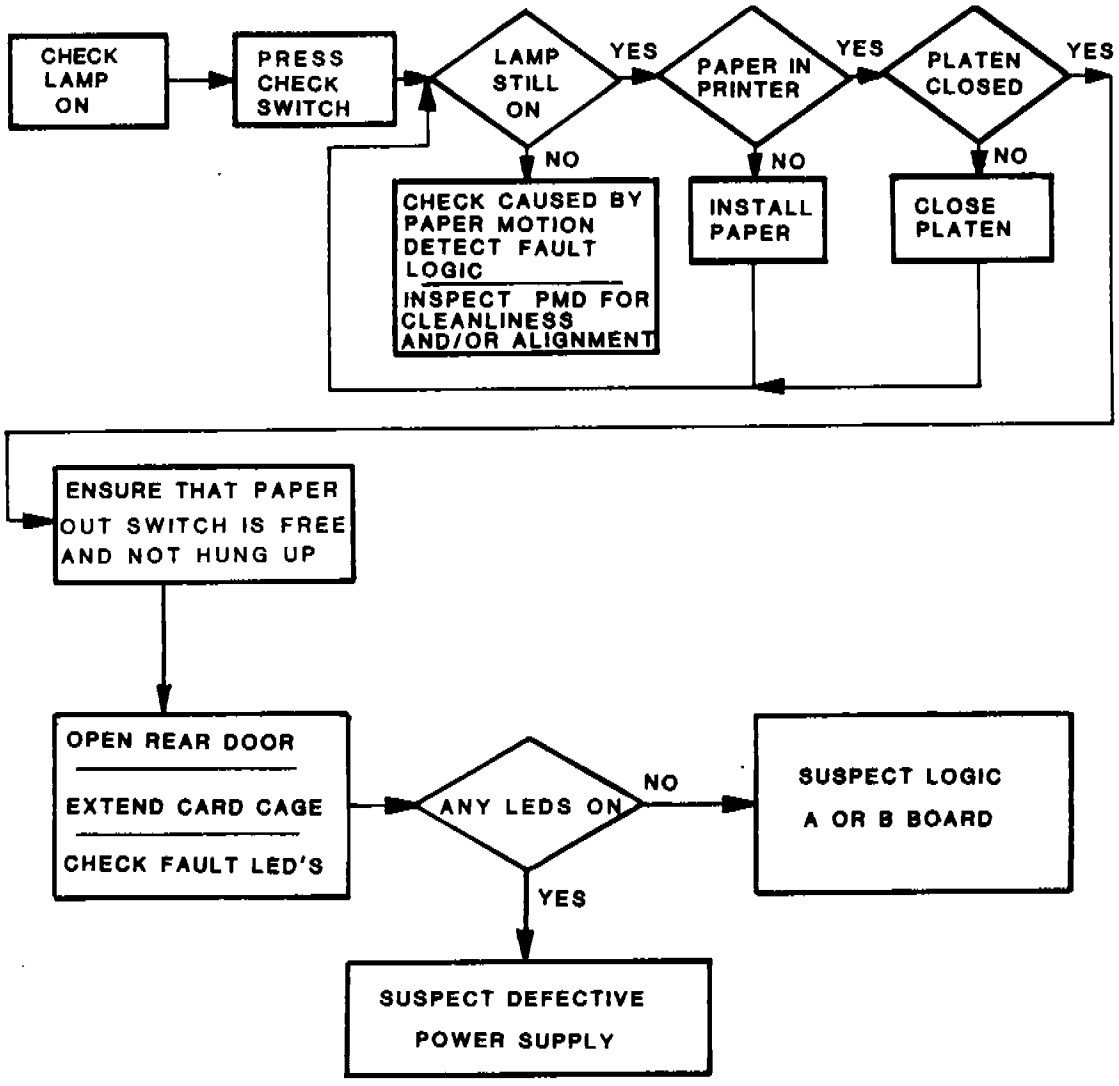

FIGURE 4-4.
CHECK LAMP IS ON

4.0 TROUBLESHOOTING PROCEDURES

4.3 CATEGORY 1: FAILURES INDICATED AT THE CONTROL PANEL

SYMPTOM 3: PRINTER WILL NOT GO ONLINE

With the Power Switch set to ON and the CHECK lamp off, place the printer online. Press the ON LINE switch on the control panel; the ON LINE lamp should light and the shuttle should begin moving. If they do not, see Figure 4-5.

4.4 CATEGORY 2: THE SHUTTLE DOES NOT TIME OUT

After power is applied and the ON LINE switch is pressed, shuttle action should time out (come up to normal operating speed and then stop) in about six seconds. If it does not, there is a problem with the MPU or the circuits it stimulates. The problem can be analyzed as follows:

> To isolate the PCBA causing the problem, the Logic A PCBA, the Logic B PCBA, and the Power Supply PCBA may be swapped for known good boards until shuttle action times out within the required six seconds. Alternately, use an oscilloscope to observe the waveforms at the points indicated in Figure 4-6.
>
> Normal signal quality for the Magnetic Pickup Assembly, MPU, SYNC, and RESYNC/NRESYNC should be as shown in Figure 3-18. NSPT should be a TTL level pulse train. Refer to the drawing (Part No. 106597) in Section 6 for details of circuit logic.

4.0 TROUBLESHOOTING PROCEDURES

4.4 CATEGORY 2: THE SHUTTLE DOES NOT TIME OUT (Continued)

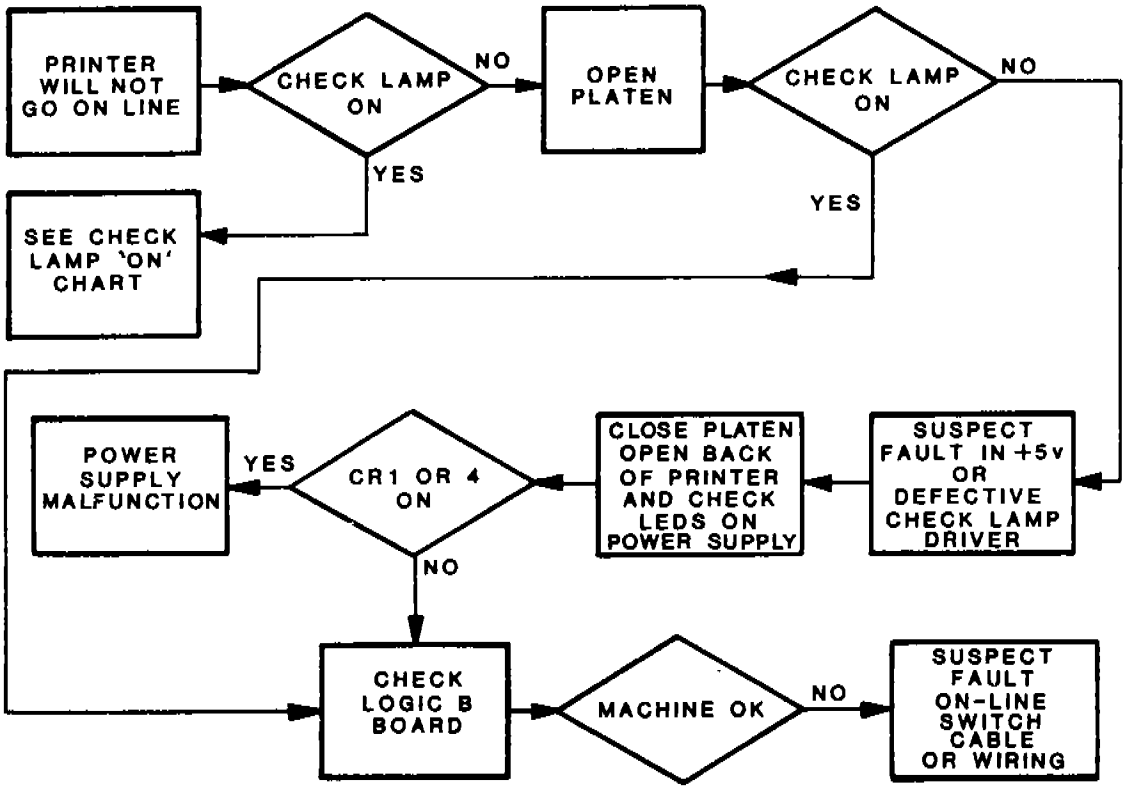

FIGURE 4-5.
PRINTER WILL NOT GO ONLINE

4.0 TROUBLESHOOTING PROCEDURES

4.4 CATEGORY 2: THE SHUTTLE DOES NOT TIME OUT (Continued)

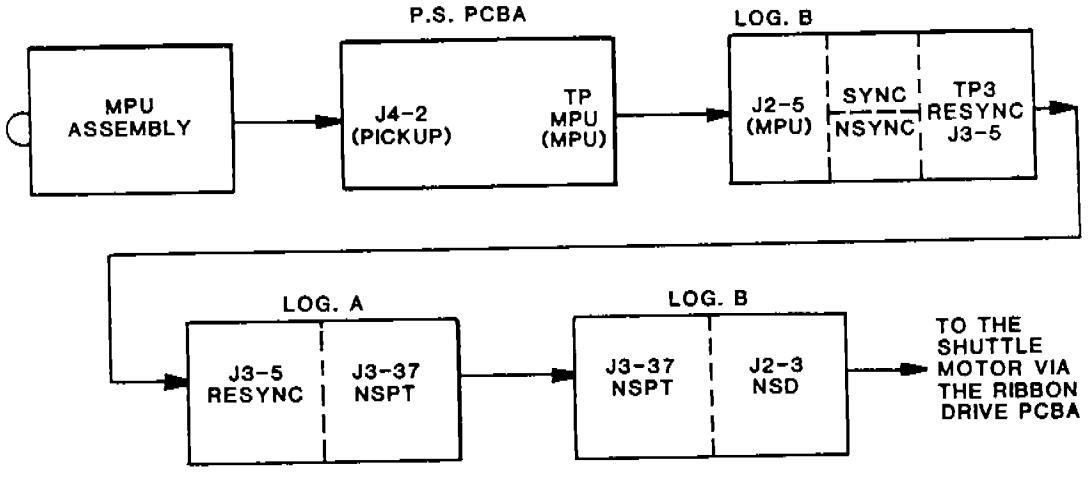

FIGURE 4-6.
SHUTTLE CONTROL WAVEFORM MEASUREMENT POINTS

4.0 TROUBLESHOOTING PROCEDURES

4.5 CATEGORY 3: THE RIBBON DOES NOT FEED PROPERLY

Verify the following:

- ◊ The ribbon is positioned correctly in the ribbon path.
- ◊ The ribbon spools are pushed all the way down on the spool hubs with the locking latch snapped over the spool.
- ◊ The ribbon is tracking properly in the ribbon guides.

Figure 4-7 is the flow chart for troubleshooting ribbon control circuits.

SYMPTOM 1: RIBBON DOES NOT FEED

The shuttle motor and the ribbon drive motors are controlled by the same signal, Shuttle Drive (NSD). Power is switched (by NSD) to the shuttle motor through a triac on the Ribbon Control PCBA. If the shuttle motor runs normally but the ribbon does not move, replace the Ribbon Control PCBA per Section 3.10.

If neither the shuttle motor nor the ribbon drive motors operate, check the connections on the control board. Check the NSD circuits on the Logic B PCBA.

NSD is a low active signal; therefore, a fast check of the shuttle and ribbon drive motors may be performed by grounding the NSD output (5A pin 8 or J2 pin 3) on the Logic B PCBA. If the motors start, the fault is in the Logic B PCBA.

If the motors do not start, move the Ribbon Drive Assembly to the service position. Connect ground to Z2, pin 2, on the Ribbon Control PCBA. If the motors start, check the connectors and cabling. If the motors do not start, replace the Ribbon Control PCBA per Section 3.10.

SYMPTOM 2: RIBBON FOLDS OVER

Clean the printer thoroughly as explained in the Operator's Guide. If the problem continues, adjust the spool hubs and ribbon guides per Section 3.11.

SYMPTOM 3: RIBBON DOES NOT RUN SMOOTHLY

The ribbon becomes perforated or torn, or it does not run smoothly through the guides. Clean the printer thoroughly as explained in the Operator's Guide. Replace the Hammerbank Cover Assembly if it is broken or bent. Replace the ribbon if it is worn. Test for tip damage and tip protrusion per Section 3.19.

4.0 TROUBLESHOOTING PROCEDURES

4.5 CATEGORY 3: THE RIBBON DOES NOT FEED PROPERLY (Continued)

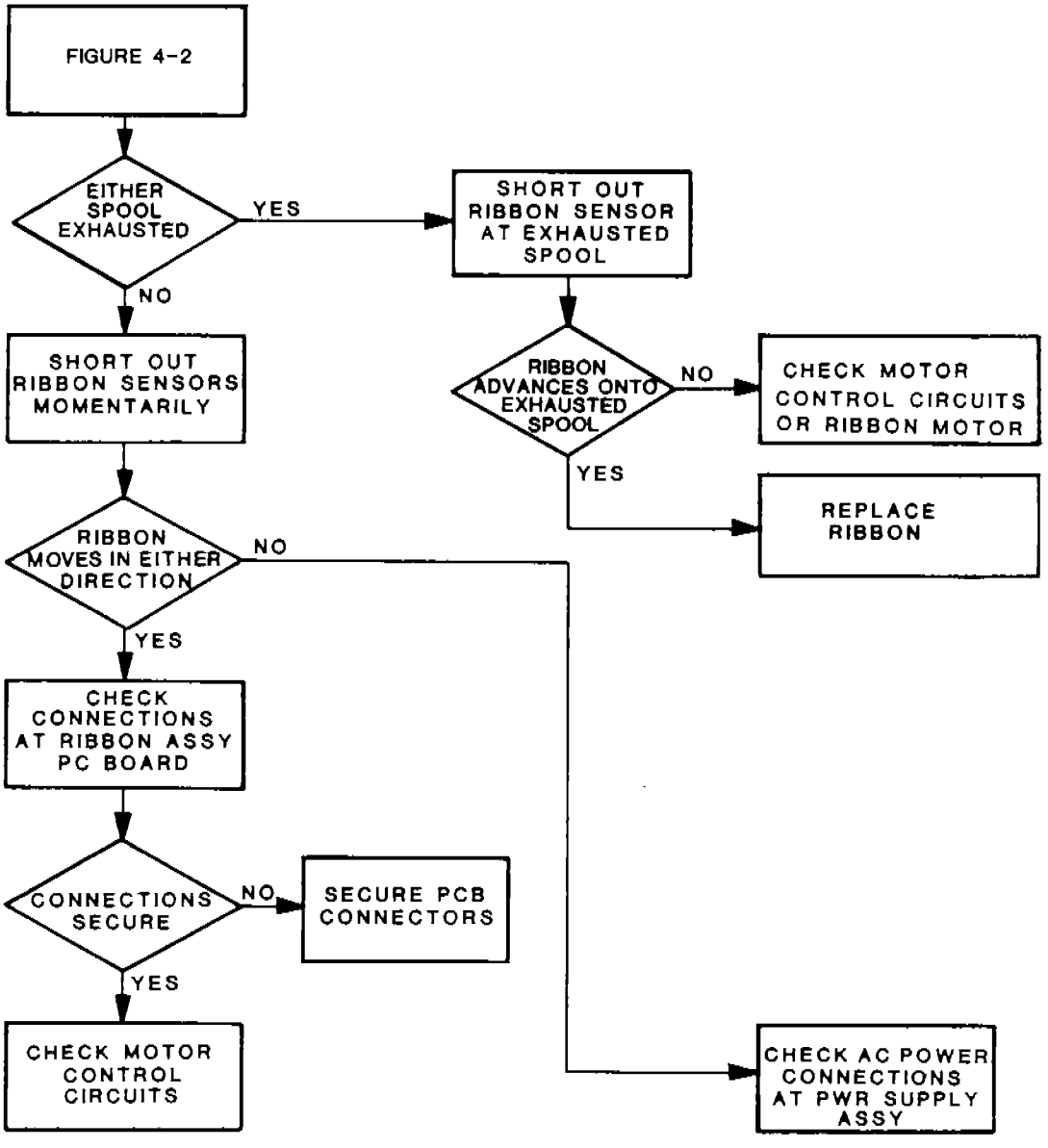

FIGURE 4-7.
RIBBON DRIVE ASSEMBLY CIRCUITS FLOW CHART

4.0 TROUBLESHOOTING PROCEDURES

4.5 CATEGORY 3: THE RIBBON DOES NOT FEED PROPERLY (Continued)

SYMPTOM 4: END OF RIBBON NOT DETECTED

Momentarily short the skids across each ribbon guide, one at a time; the ribbon should reverse direction each time. If it does, replace the ribbon. If it does not, replace the Ribbon Control PCBA per section 3.10.

4.6 CATEGORY 4: INTERFACE PROBLEMS BETWEEN THE PRINTER AND THE HOST COMPUTER.

SYMPTOM 1: FAILURE TO OPERATE AT INITIAL TURN ON.

Failure of a new printer to operate correctly when it is first put into service is often the result of an incorrect configuration in PCBA jumpers, termination resistors, or PROMs on the Logic PCBAs. When installing the boards, be sure they are configured for P300 operation and any optional printer functions. Also configure for a particular interface (Dataproducts or Centronics).

If the printer does not operate correctly on initial turn on or following installation of a replacement PCBA, check configurations defined in the User's Reference Manual. Determine that those configurations are correct on the board.

SYMPTOM 2: NO PRINTING UNDER COMPUTER CONTROL

First run the Self-Test (Press the CHECK and PAPER ADVANCE switches simultaneously). If it runs correctly, use the Exerciser to verify that the interface circuits on the Logic A PCBA are working.

1. If the printer fails to operate with the Exerciser, see Figure 4-8, a block diagram of the printer/host computer interface. Use the Exerciser to determine that the data lines and strobes are changing state at the receiver outputs and that the drivcer outputs are returning status information to the host computer.

2. If the interface is working with the Exerciser, one or more of the following problems may exist within the host system.

- ◊ The host computer interface cable is defective or too long. Replace the cable or add pullup and pulldown resistors to the Logic A PCBA as explained in the User's Reference Manual.
- ◊ The host computer is defective.
- ◊ The host computer application program contains errors.

4.0 TROUBLESHOOTING PROCEDURES

4.6 CATEGORY 4: INTERFACE PROBLEMS BETWEEN THE PRINTER AND THE HOST COMPUTER (Continued)

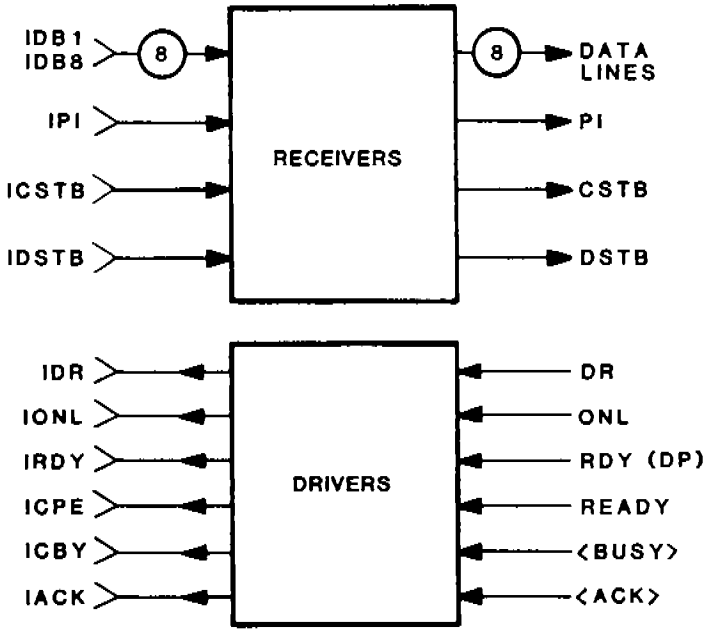

FIGURE 4-8.
INTERFACE FUNCTIONAL BLOCK DIAGRAM

4.0 TROUBLESHOOTING PROCEDURES

4.7 CATEGORY 5: IMPROPER PRINTER OPERATION

Printing occurs by:

1. Reception and storage of data by the interface.

2. Positioning of the shuttle mechanism in coordination with SYNC and RESYNC information supplied by the magnetic pickup circuits.

3. Correct sequences of reading character input from the buffer memory for dot column, dot row, and character count.

4. Correct translation of character codes into serial bits and multiplexing these bits to the hammer drivers via the COM line.

5. Correct operation and timing of Hammer Driver PCBA shift registers, data latches, tri-state buffers, and Darlington drivers.

6. Correct operation of hammer coils and hammer springs.

Figure 4-9 is a flow chart of events in the print sequence.

SYMPTOM 1: PRINTER DOES NOT PRINT

The printer should print under the control of an Exerciser or the host computer. If the printer does not print under either of these conditions, replace the Logic A, the Logic B, and/or the Hammer Driver PCBA according to the instructions in Section 3.42.

If the printer fails to print only when controlled by the host computer, the fault lies within the host computer, the computer software, or the I/O interface cables.

4.0 TROUBLESHOOTING PROCEDURES

4.7 CATEGORY 5: IMPROPER PRINTER OPERATION (Continued)

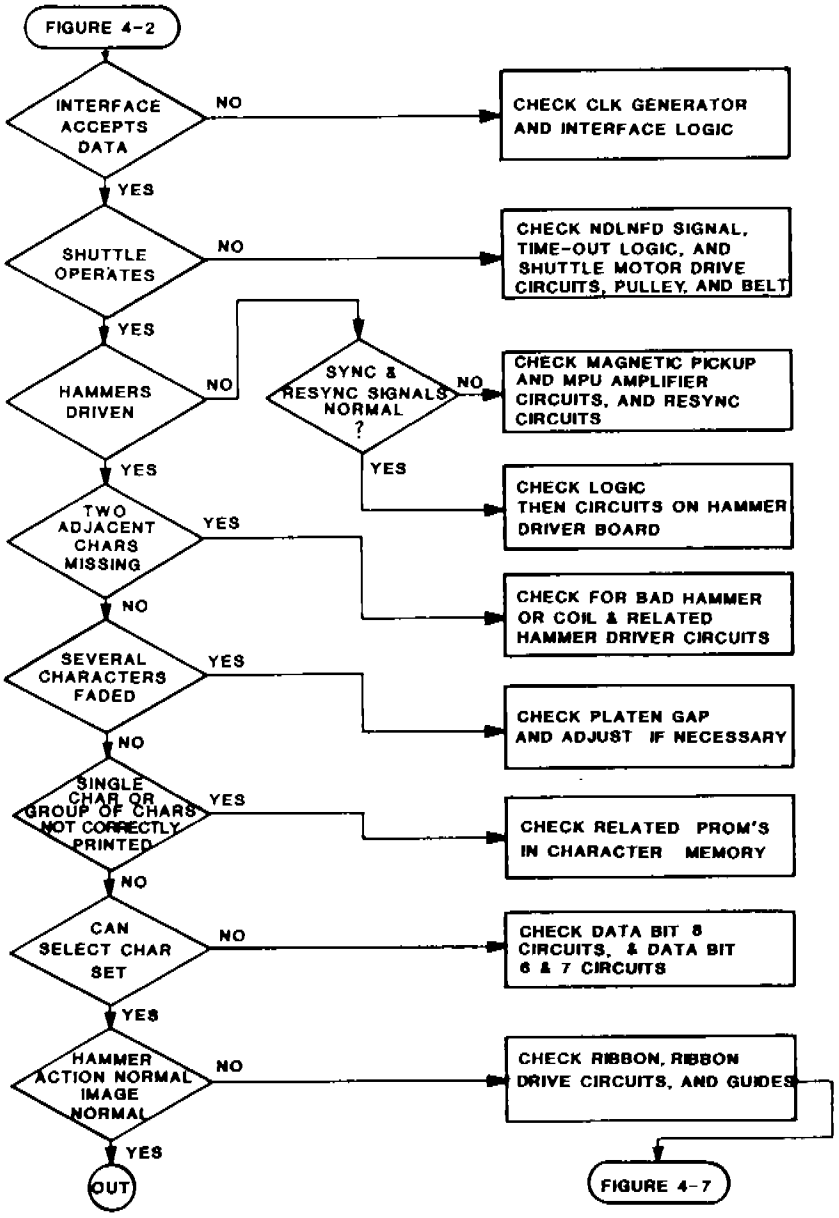

FIGURE 4-9.
PRINTING ACTION BLOCK DIAGRAM

4.0 TROUBLESHOOTING PROCEDURES

4.7 CATEGORY 5: IMPROPER PRINTER OPERATION (Continued)

SYMPTOM 2: CHARACTERS MISSING

All "E", all "H", or Shift Recycle can be helpful in determining missing characters. Figure 4-10 illustrates missing characters.

1. Consistently Missing Characters - If a particular group of character positions is missing consistently, clean, adjust, or replace one or more of the following assemblies per the section indicated.

◊ Hammer tip is broken. Replace the hammer spring per Section 3.19.

◊ Chaff or lint particles accumulated between the hammer and pole pin. Clean the hammer spring and pole pin per Section 3.19.

◊ Platen gap is adjusted improperly. Adjust per Section 3.17.

◊ The coil is open (does not read a nominal 5.2 Ohms), shorted or visibly burned. Replace per Section 3.20.

◊ The Hammer Driver PCBA is defective. Replace per Section 3.42.

◊ Platen lever open too far. Close for good character rendition.

2. Random Missing Characters - If the missing characters are not concentrated in a particular area, correct one or more of the following assemblies per the section indicated:

◊ Ribbon folds over. Clean the printer as explained in the Operator's Guide. Adjust the ribbon guide and spool hubs per Section 3.11.

◊ Ribbon is worn. Replace the ribbon.

4.0 TROUBLESHOOTING PROCEDURES

4.7 CATEGORY 5: IMPROPER PRINTER OPERATION (Continued)

FIGURE 4-10.
MISSING CHARACTERS

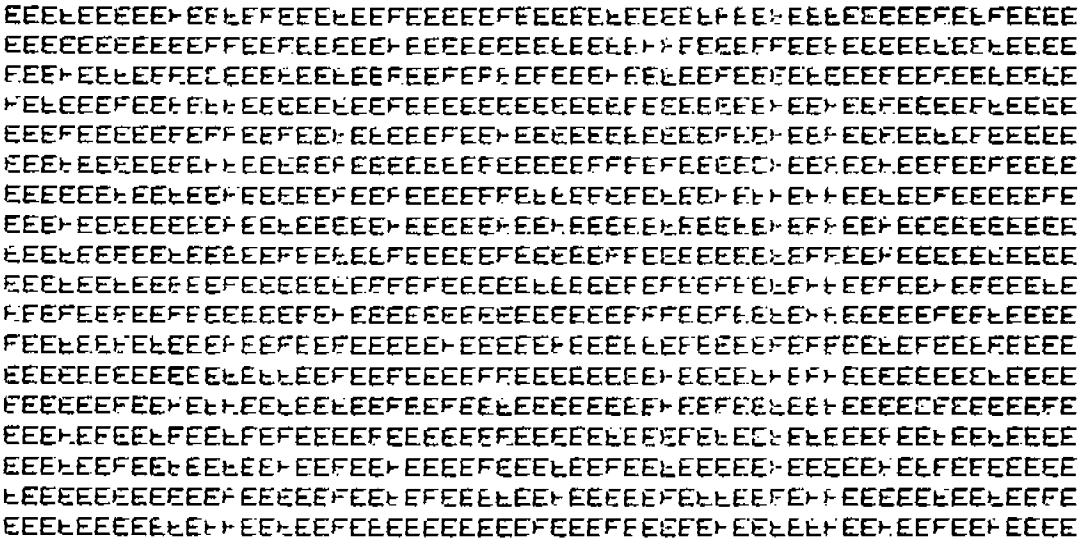

FIGURE 4-11.
EXAMPLES OF DROPOUT

4.0 TROUBLESHOOTING PROCEDURES

4.7 CATEGORY 5: IMPROPER PRINTER OPERATION (Continued)

SYMPTOM 3: MISSING DOTS (DROPOUT)

If the printer misses dot rows and/or columns, print all E's, all #'s, or plot to determine the dropout. Figure 4-11 illustrates dropout.

1. Consistent Dropout - Consistent dropout generally signals a mechanical problem. Clean or adjust one or more of the following assemblies per the section indicated.

◊ Platen gap is too wide (dropout may extend over a number of characters at either side of the platen). Adjust per Section 3.17.

◊ The Hammerbank Cover Assembly has accumulations of lint, chaff and ink. Remove the Hammerbank Cover Assembly per Section 3.17 step 4, and clean thoroughly using a cloth dampened with isopropyl alcohol. Replace the assembly per Section 3.17 step 9.

◊ Hammer spring tension is too light. Tweak the hammer spring toward the platen and rerun the performance test. If dropout persists, replace the hammer spring per Section 3.19.

2. Random Dropout - Random dropout may be the result of either a mechanical problem or an electronic problem. Replace one or more of the following assemblies per the section indicated.

Ribbon worn or damaged. Clean the ribbon path and adjust the hubs and guides; then replace the ribbon.

◊ The coil is open (does not read a nominal 5.2 ohms), shorted or visibly burned	Section 3.20
◊ Shuttle Assembly	Section 3.15
◊ Logic A PCBA	Section 3.42
◊ Logic B PCBA	Section 3.42
◊ Coil not positioned correctly on pole pin	Section 3.20
◊ Hammer Driver PCBA	Section 3.42

4.0 TROUBLESHOOTING PROCEDURES

4.7 CATEGORY 5: IMPROPER PRINTER OPERATION (Continued)

SYMPTOM 4: CHARACTER POSITIONS ARE LIGHT, OR SMEARED, OR BOTH ("DRAGGING HAMMER")

A "dragging hammer" is one which does not retract properly. The result is a group of printed character positions that appear consistently light or smeared (possibly with retrace patterns appearing during line spacing and/or with dot row 1 overprinted across the entire space).

Any of the performance test patterns all E, all H, all #, and Row Increment can be helpful in pinpointing the faulty hammer. Figure 4-12 illustrates a dragging hammer.

Clean or replace assemblies per the section indicated.

- ◊ Chaff or lint particles have accumulated between the hammer and pole pin. Clean the hammer spring and pole pin per Section 3.19.
- ◊ The hammer spring is defective. Replace per Section 3.19.
- ◊ The coil is open (does not read a nominal 5.2 Ohms), shorted or burned. Replace per Section 3.20.
- ◊ The coil is not positioned correctly on pole pin. Replace the coil per Section 3.20.

SYMPTOM 5: DOTS MISPLACED

If the printer misplaces dots as it prints, one or more of the following items must be aligned, adjusted, or replaced, based on the indications observed:

- ◊ One or more hammers misaligned. Align per Section 3.19.
- ◊ Platen gap adjusted improperly. Adjust per Section 3.17.
- ◊ MPU circuit defective - Replace the Logic A PCBA or the PS PCBA.
- ◊ "Noise" in the electrical system caused by either (1) improperly grounded cables or (2) a defective shuttle motor. Restore proper grounding or replace shuttle motor.
- ◊ Character PROM defective. Replace it on the Logic A PCBA.

4.0 TROUBLESHOOTING PROCEDURES

4.7 CATEGORY 5: IMPROPER PRINTER OPERATION (Continued)

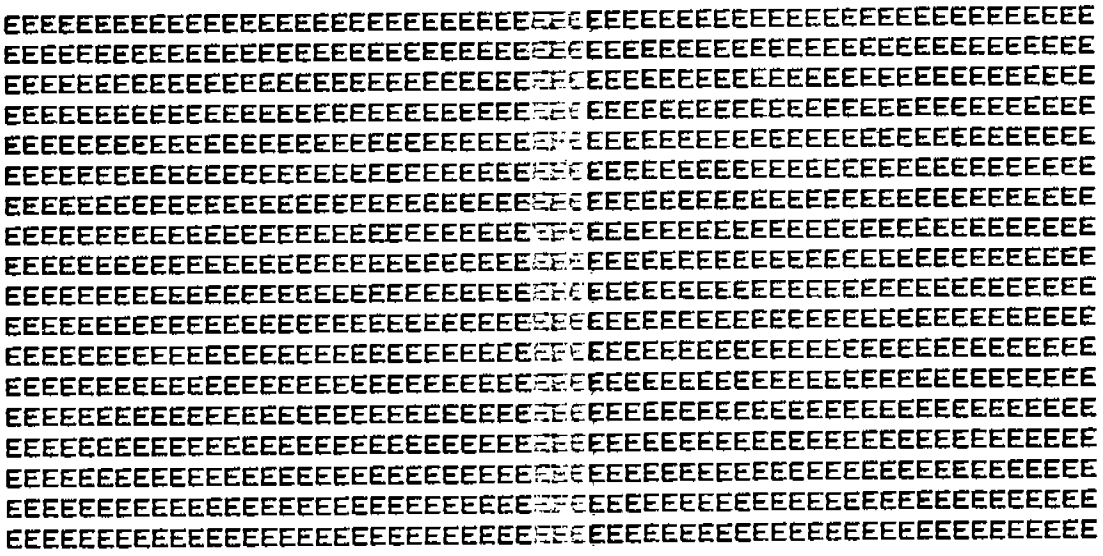

FIGURE 4-12.
EXAMPLE OF DRAGGING HAMMER

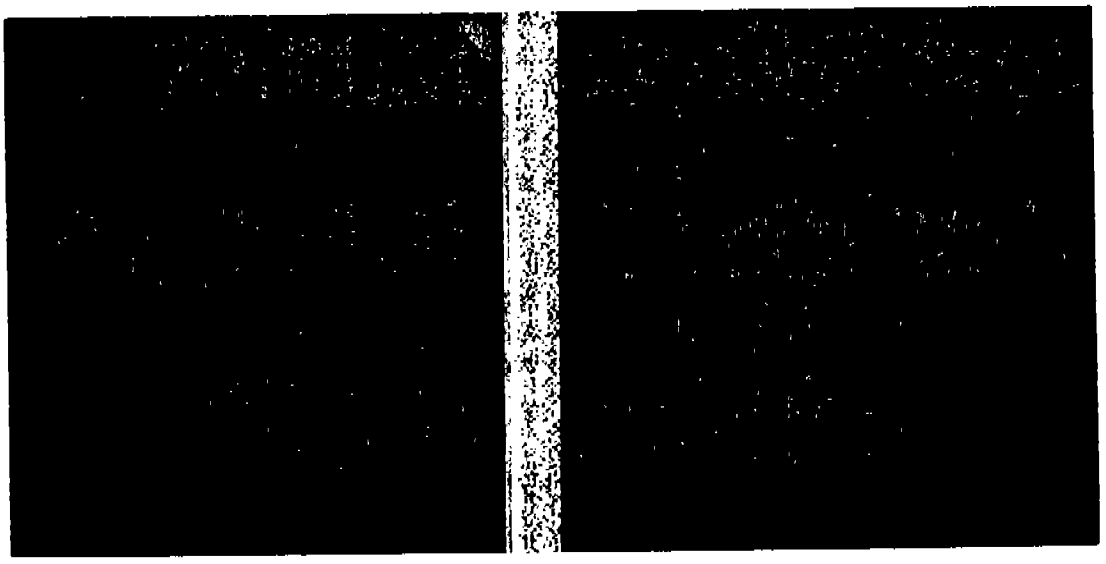

FIGURE 4-13.
PRINT DENSITY REQUIRES HAMMER ADJUSTMENT

4.0 TROUBLESHOOTING PROCEDURES

4.7 CATEGORY 5: IMPROPER PRINTER OPERATION (Continued)

SYMPTOM 6: IMPROPER PRINT DENSITY

Improper print density occurs when the printer prints too light or too dark. To investigate the problem, run plot test pattern followed by either all E's or all H's. Figure 4-13 illustrates improper density.

When print density problems appear, install a new ribbon and rerun some of the test patterns. If the problem persists, adjust or replace either or both of the following assemblies per the section indicated:

- ◊ Platen gap adjusted improperly. Adjust platen gap per Section 3.17.
- ◊ One or more hammer springs is defective or needs tweaking. Replace or tweak per Section 3.19.

SYMPTOM 7: IMPROPER HORIZONTAL ALIGNMENT

Improper horizontal alignment of hammer springs is detectable by printing all E's or all H's. Figure 4-14 illustrates horizontal misalignment of dot rows that may be masked by interline spaces in character printing. Align hammers per Section 3.19.

SYMPTOM 8: IMPROPER VERTICAL ALIGNMENT

Improper vertical alignment result from a combination of improper mechanical adjustments. Printing all H's or underlines pinpoints vertical alignment problems.

1. Character Positions Vertically Misaligned - If the test results resemble Figure 4-15, hammers corresponding to the misaligned characters are misaligned vertically. Align the hammers per Section 3.19.

2. Characters Misformed Vertically - If printing all H's and all underlines reveal characters which are misshapen along the vertical plane (as illustrated in Figure 4-16), measure the MPU gap and phasing per Section 3.25, and adjust as necessary.

3. Erratic Character Height - The printer may produce characters of improper height due to erratic paper feeding.

4. Compressed Print - Compressed print (Figure 4-17) can result from a paper feed mechanism friction problem or from electronic problems that produce improper dot row counts. Compressed print also can result from any of the problems that cause erratic paper feeding.

4.0 TROUBLESHOOTING PROCEDURES

4.7 CATEGORY 5: IMPROPER PRINTER OPERATION (Continued)

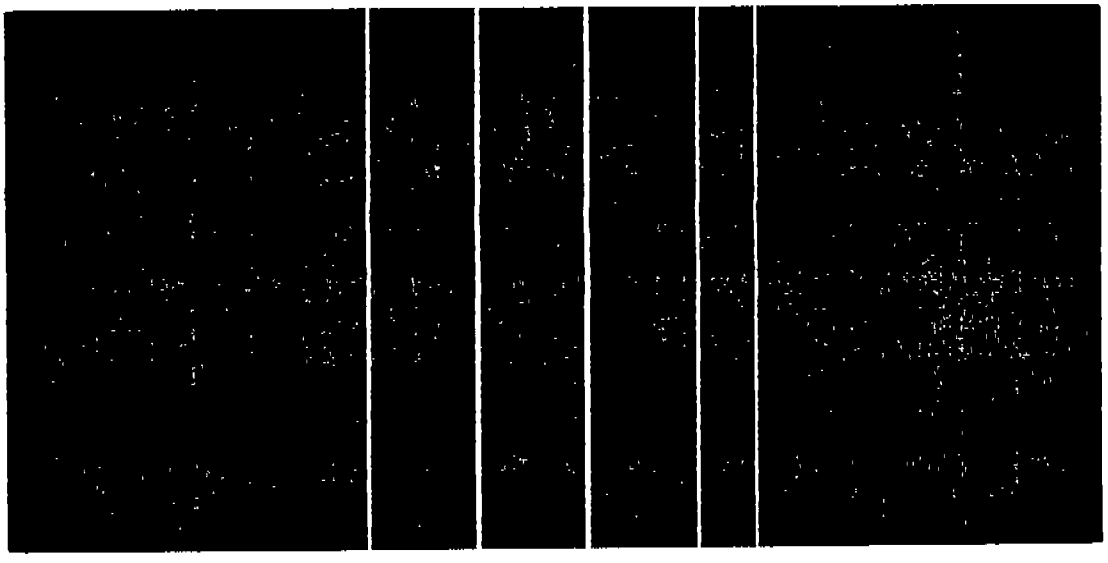

FIGURE 4-14.
HORIZONTAL HAMMER ALIGNMENT

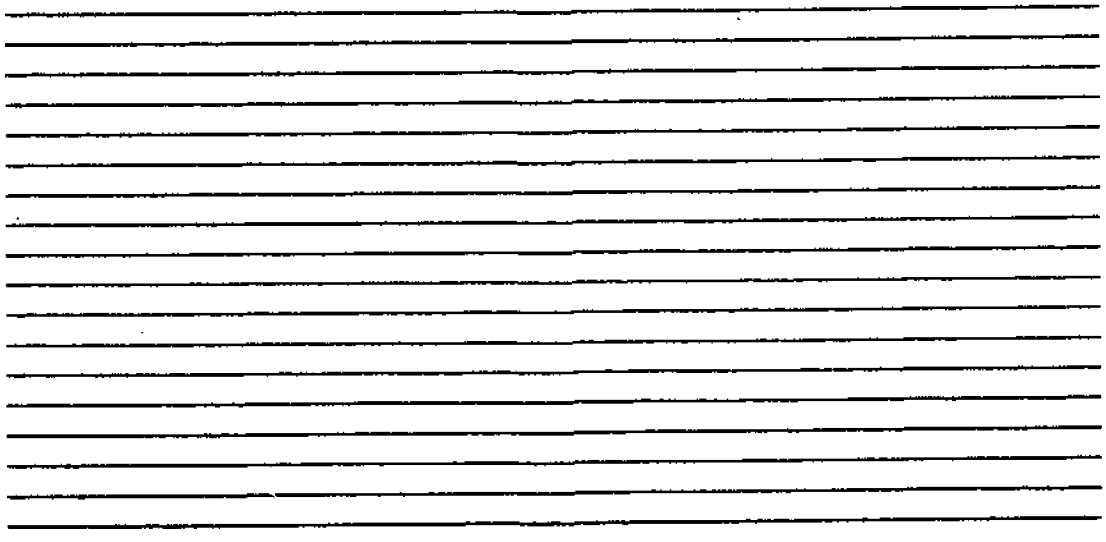

FIGURE 4-15.
VERTICAL MISALIGNMENT

4.0 TROUBLESHOOTING PROCEDURES

4.7 CATEGORY 5: IMPROPER PRINTER OPERATION (Continued)

```
GHIJKLMNOPQRSTUVWXYZ[\]^_ !"#$%&'()*+,-./0123456789:;<=>?@AB
HIJKLMNOPQRSTUVWXYZ[\]^_ !"#$%&'()*+,-./0123456789:;<=>?@ABC
IJKLMNOPQRSTUVWXYZ[\]^_ !"#$%&'()*+,-./0123456789:;<=>?@ABCD
JKLMNOPQRSTUVWXYZ[\]^_ !"#$%&'()*+,-./0123456789:;<=>?@ABCDE
KLMNOPQRSTUVWXYZ[\]^_ !"#$%&'()*+,-./0123456789:;<=>?@ABCDEF
LMNOPQRSTUVWXYZ[\]^_ !"#$%&'()*+,-./0123456789:;<=>?@ABCDEFG
MNOPQRSTUVWXYZ[\]^_ !"#$%&'()*+,-./0123456789:;<=>?@ABCDEFGH
NOPQRSTUVWXYZ[\]^_ !"#$%&'()*+,-./0123456789:;<=>?@ABCDEFGHI
OPQRSTUVWXYZ[\]^_ !"#$%&'()*+,-./0123456789:;<=>?@ABCDEFGHIJ
PQRSTUVWXYZ[\]^_ !"#$%&'()*+,-./0123456789:;<=>?@ABCDEFGHIJK
QRSTUVWXYZ[\]^_ !"#$%&'()*+,-./0123456789:;<=>?@ABCDEFGHIJKL
RSTUVWXYZ[\]^_ !"#$%&'()*+,-./0123456789:;<=>?@ABCDEFGHIJKLM
STUVWXYZ[\]^_ !"#$%&'()*+,-./0123456789:;<=>?@ABCDEFGHIJKLMN
TUVWXYZ[\]^_ !"#$%&'()*+,-./0123456789:;<=>?@ABCDEFGHIJKLMNO
UVWXYZ[\]^_ !"#$%&'()*+,-./0123456789:;<=>?@ABCDEFGHIJKLMNOP
VWXYZ[\]^_ !"#$%&'()*+,-./0123456789:;<=>?@ABCDEFGHIJKLMNOPQ
WXYZ[\]^_ !"#$%&'()*+,-./0123456789:;<=>?@ABCDEFGHIJKLMNOPQR
XYZ[\]^_ !"#$%&'()*+,-./0123456789:;<=>?@ABCDEFGHIJKLMNOPQRS
```

FIGURE 4-16.
VERTICALLY MISFORMED CHARACTERS

```
~ @ABCDEFGHIJKLMNOPQRSTUVWXYZ[\]^_ !"#$%&'()*+,-./0123456789
 @ABCDEFGHIJKLMNOPQRSTUVWXYZ[\]^_ !"#$%&'()*+,-./0123456789:
@ABCDEFGHIJKLMNOPQRSTUVWXYZ[\]^_ !"#$%&'()*+,-./0123456789:;
ABCDEFGHIJKLMNOPQRSTUVWXYZ[\]^_ !"#$%&'()*+,-./0123456789:;<
BCDEFGHIJKLMNOPQRSTUVWXYZ[\]^_ !"#$%&'()*+,-./0123456789:;<=
CDEFGHIJKLMNOPQRSTUVWXYZ[\]^_ !"#$%&'()*+,-./0123456789:;<=>
DEFGHIJKLMNOPQRSTUVWXYZ[\]^_ !"#$%&'()*+,-./0123456789:;<=>?
EFGHIJKLMNOPQRSTUVWXYZ[\]^_ !"#$%&'()*+,-./0123456789:;<=>?@
FGHIJKLMNOPQRSTUVWXYZ[\]^_ !"#$%&'()*+,-./0123456789:;<=>?@A
GHIJKLMNOPQRSTUVWXYZ[\]^_ !"#$%&'()*+,-./0123456789:;<=>?@AB
HIJKLMNOPQRSTUVWXYZ[\]^_ !"#$%&'()*+,-./0123456789:;<=>?@ABC
IJKLMNOPQRSTUVWXYZ[\]^_ !"#$%&'()*+,-./0123456789:;<=>?@ABCD
JKLMNOPQRSTUVWXYZ[\]^_ !"#$%&'()*+,-./0123456789:;<=>?@ABCDE
KLMNOPQRSTUVWXYZ[\]^_ !"#$%&'()*+,-./0123456789:;<=>?@ABCDEF
LMNOPQRSTUVWXYZ[\]^_ !"#$%&'()*+,-./0123456789:;<=>?@ABCDEFG
MNOPQRSTUVWXYZ[\]^_ !"#$%&'()*+,-./0123456789:;<=>?@ABCDEFGH
NOPQRSTUVWXYZ[\]^_ !"#$%&'()*+,-./0123456789:;<=>?@ABCDEFGHI
OPQRSTUVWXYZ[\]^_ !"#$%&'()*+,-./0123456789:;<=>?@ABCDEFGHIJ
```

FIGURE 4-17.
VERTICAL COMPRESSION OF PRINT

4.0 TROUBLESHOOTING PROCEDURES

4.7 CATEGORY 5: IMPROPER PRINTER OPERATION (Continued)

SYMPTOM 8: IMPROPER VERTICAL ALIGNMENT

Adjust or remove and replace one or more of the following assemblies per the section indicated.

- ◊ Paper Feed Motor defective. Replace per Section 3.32.
- ◊ Platen gap adjusted improperly. Adjust per Section 3.17.
- ◊ Logic B PCBA defective. Replace per Section 3.42.
- ◊ Power Supply PCBA defective. Replace per Section 3.39.
- ◊ Either tractor belt gate too tight. Adjust per Section 3.33.

SYMPTOM 9: GARBLED PRINT AND/OR INCORRECT FONT

If the printer produces characters other than those expected:

- ◊ The Hammerbank Cable Assembly is defective. Replace the Shuttle Assembly per Section 3.15.
- ◊ The MPU Circuit is defective. Troubleshoot per Section 4.4.

4.0 TROUBLESHOOTING PROCEDURES

4.8 CATEGORY 6: PAPER FEED MECHANISM DOES NOT FEED PROPERLY

Printing occurs by:

1. An input Line Feed or Form Feed command received during the Load State operation.

2. A full row count (7 or 9) after a line of characters has been completed.

3. Actuation of the TOP OF FORM or PAPER ADVANCE switch.

4. Arrival of paper at the selected skip over perforation line.

5. An input Binary Count, Vertical Tab command, or EVFU channel number (on the data lines), along with a Paper Instruction (PI) signal (standard interface). This will cause paper to slew a specified number of lines.

The flow charts in Figures 4-2 and 4-18 provide information helpful in isolating faults in the paper feed circuits.

SYMPTOM 1: PAPER DOES NOT FEED AT ALL

Verify that there is no paper jam, and replace one or more of the following assemblies per the section indicated.

◊ Paper feed belt, if it is broken	Section 3.31
◊ Paper Feed Motor	Section 3.32
◊ Logic B PCBA	Section 3.42
◊ Power Supply PCBA	Section 3.39
◊ Paper Ironer, if bent or nicked	Section 3.21
◊ Tractor gate too tight	Section 3.33

4.0 TROUBLESHOOTING PROCEDURES

4.8 CATEGORY 6: PAPER FEED MECHANISM DOES NOT FEED PROPERLY (Continued)

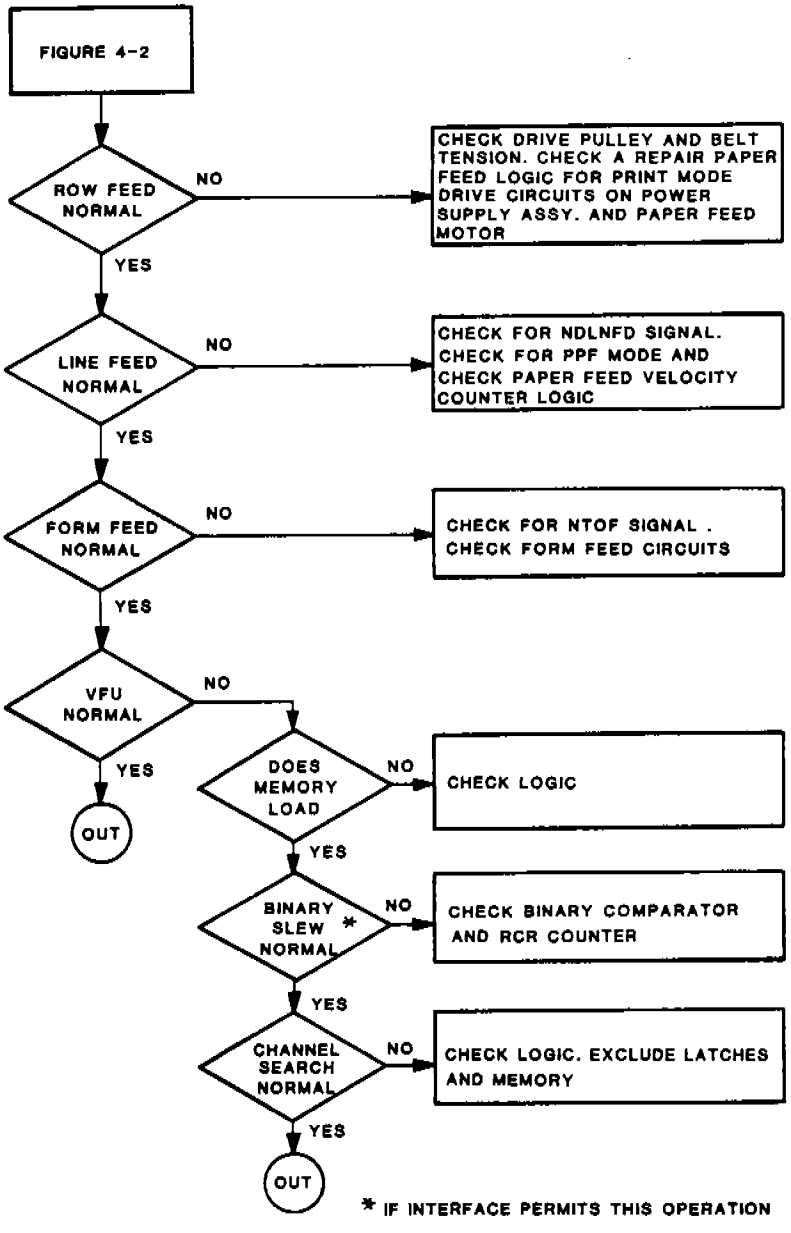

FIGURE 4-18.
PAPER FEED LOGIC FLOW CHART

4.0 TROUBLESHOOTING PROCEDURES

4.8 CATEGORY 6: PAPER FEED MECHANISM DOES NOT FEED PROPERLY (Continued)

SYMPTOM 2: PAPER FEEDS ERRACTICALLY

If the paper feeds erratically, adjust or replace one or more of the following assemblies per the section indicated:

- ◊ Spline Shaft Assembly bent. Replace per Section 3.33.
- ◊ Paper feed belt tension too tight or too loose. Adjust tension per Section 3.31.
- ◊ Paper feed belt defective. Replace per Section 3.31.
- ◊ Platen gap incorrect. Adjust per Section 3.17.
- ◊ Paper too thick. Replace with paper having correct weight.
- ◊ Damaged pulley on the Spline Shaft Assembly. Replace the spline shaft per Section 3.33.
- ◊ Tractor gate too tight. Adjust the tractor gate per Section 3.33.
- ◊ Tractor sprocket broken. Replace the tractor per Section 3.33.
- ◊ Paper feeding into printer incorrectly. Remove and reload the paper supply.
- ◊ Logic B PCBA defective. Replace per Section 3.42.
- ◊ Power Supply PCBA defective. Replace per Section 3.39.

SYMPTOM 3: PAPER DRAGS

If the paper drags, adjust or replace one or more of the following assemblies per the section indicated.

- ◊ Platen gap adjusted improperly. Adjust platen gap per Section 3.17.
- ◊ Paper ironer damaged. Replace the ironer per Section 3.21.
- ◊ Paper feed belt tension adjusted improperly. Adjust belt tension per Section 3.31.
- ◊ Paper feed belt worn. Replace the belt per Section 3.31.
- ◊ Either tractor gate too tight. Adjust per Section 3.33.
- ◊ Either tractor installed improperly. Replace per Section 3.33.

4.0 TROUBLESHOOTING PROCEDURES

4.8 CATEGORY 6: PAPER FEED MECHANISM DOES NOT FEED PROPERLY (Continued)

SYMPTOM 4: TOP-OF-FORM DOES NOT OPERATE

If the printer fails to perform the top-of-form operations correctly, adjust or replace one or more of the following assemblies per the section indicated.

- ◊ Either tractor gate too tight. Adjust per Section 3.33.
- ◊ The Control Panel TOP OF FORM switch is defective. Replace per Section 3.7.
- ◊ Logic B PCBA is defective. Replace per Section 3.42.
- ◊ Power Supply PCBA is defective. Replace per Section 3.39.

4.9 PERFORMANCE TESTS

Run performance tests routinely to verify printer operation, poor print quality, and results of corrective maintenance. Perform these tests by using the Printronix Exerciser or the appropriate diagnostic program from the host computer. There are seven performance tests. One is a test for standard printing and three others are dedicated to specific troubleshooting instructions given in the next section. The remaining three tests are general printer tests.

Unless specified, each test requires that the printer is loaded with full width single part paper and the Exerciser or host computer is attached to the interface connector on the rear of the printer. Each associated figure shows the required settings for the Exerciser controls. Notice that the Exerciser LINE LENGTH switch is always set to 132 and the FUNCTION switch is set to LINE FEED.

The tests are described as follows:

SECTION	DESCRIPTION
4.10	Normal Printing Test (Sliding Pattern)
4.11	MPU Phasing Test (All "H's")
4.12	Print Uniformity Test (Elongated "E's")
4.13	Vertical Hammer Alignment Test (Underline)
4.14	General Tests

4.0 TROUBLESHOOTING PROCEDURES

4.10 NORMAL PRINTING TEST (SLIDING PATTERN)

To print a sliding pattern, follow these steps.

1. Load the printer with full width single part paper.

2. Set the Exerciser controls as follows:

◊ Line Length = 132 (or corresponding to paper width).

◊ Character = SRO-96 if lowercase character set installed; otherwise, SRO-64.

◊ Special = None.

◊ Function = Line Feed (LF).

3. Place the printer online by pressing and releasing the ON LINE switch. Print one half page of the sliding pattern and take the printer offline.

4. Examine the printout. All characters should appear in each line of print as shown in Figure 4-19.

```
HIJKLMNOPQRSTUVWXYZ[\]^_`abcdefghijklmnopqrstuvwxyz{|}~@ABCDEFGHIJ
IJKLMNOPQRSTUVWXYZ[\]^_`abcdefghijklmnopqrstuvwxyz{|}~@ABCDEFGHIJK
JKLMNOPQRSTUVWXYZ[\]^_`abcdefghijklmnopqrstuvwxyz{|}~@ABCDEFGHIJKL
KLMNOPQRSTUVWXYZ[\]^_`abcdefghijklmnopqrstuvwxyz{|}~@ABCDEFGHIJKLM
LMNOPQRSTUVWXYZ[\]^_`abcdefghijklmnopqrstuvwxyz{|}~@ABCDEFGHIJKLMN
MNOPQRSTUVWXYZ[\]^_`abcdefghijklmnopqrstuvwxyz{|}~@ABCDEFGHIJKLMNO
NOPQRSTUVWXYZ[\]^_`abcdefghijklmnopqrstuvwxyz{|}~@ABCDEFGHIJKLMNOP
OPQRSTUVWXYZ[\]^_`abcdefghijklmnopqrstuvwxyz{|}~@ABCDEFGHIJKLMNOPQ
PQRSTUVWXYZ[\]^_`abcdefghijklmnopqrstuvwxyz{|}~@ABCDEFGHIJKLMNOPQR
QRSTUVWXYZ[\]^_`abcdefghijklmnopqrstuvwxyz{|}~@ABCDEFGHIJKLMNOPQRS
RSTUVWXYZ[\]^_`abcdefghijklmnopqrstuvwxyz{|}~@ABCDEFGHIJKLMNOPQRST
STUVWXYZ[\]^_`abcdefghijklmnopqrstuvwxyz{|}~@ABCDEFGHIJKLMNOPQRSTU
TUVWXYZ[\]^_`abcdefghijklmnopqrstuvwxyz{|}~@ABCDEFGHIJKLMNOPQRSTUV
UVWXYZ[\]^_`abcdefghijklmnopqrstuvwxyz{|}~@ABCDEFGHIJKLMNOPQRSTUVW
VWXYZ[\]^_`abcdefghijklmnopqrstuvwxyz{|}~@ABCDEFGHIJKLMNOPQRSTUVWX
WXYZ[\]^_`abcdefghijklmnopqrstuvwxyz{|}~@ABCDEFGHIJKLMNOPQRSTUVWXY
XYZ[\]^_`abcdefghijklmnopqrstuvwxyz{|}~@ABCDEFGHIJKLMNOPQRSTUVWXYZ
```

Line Length = 132
Character = SRO-96
Special = None
Function = Line Feed

FIGURE 4-19.
SLIDING PATTERN, ALL UPPER AND LOWERCASE CHARACTERS

4.0 TROUBLESHOOTING PROCEDURES

4.11 MPU PHASING TEST (ALL "H's")

To run the test, do the following steps:

1. Load the printer with full width single part paper.

2. Set Exerciser controls as follows:

◊ Line Length = 132 (or corresponding to paper width).

◊ Character = H.

◊ Special = none.

◊ Function = Line Feed (LF).

3. Put the printer online. Print one half page of the letter H. Take the printer offline.

4. Examine the printout for vertical alignment of dots in alternate dot columns. If dots are staggered more than 0.005 inch as shown in Figure 4-20, perform MPU phasing adjustments described in section 3.25.

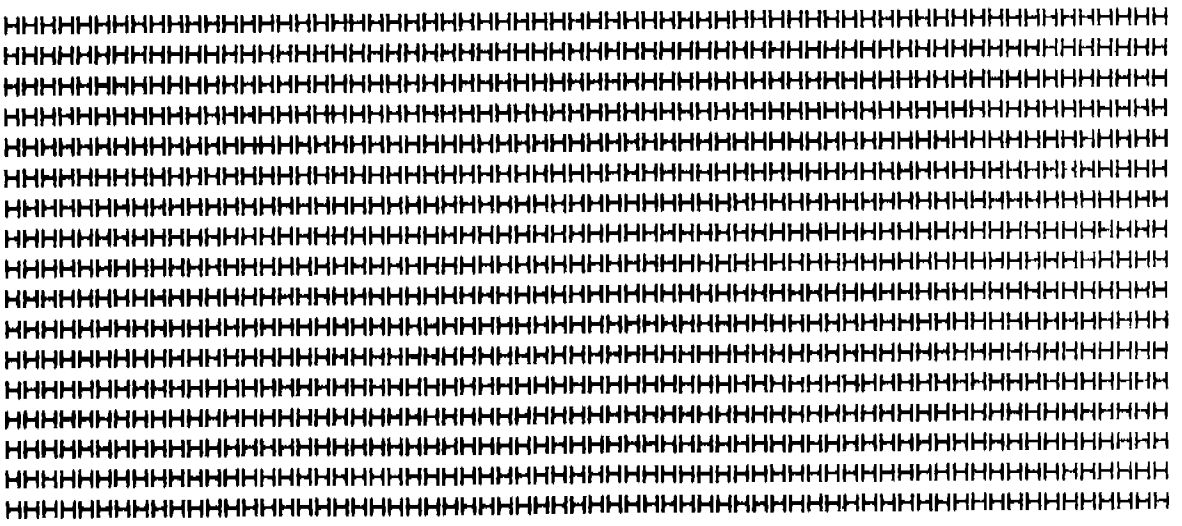

Line Length = 132
Character = H
Special = None
Function = Line Feed

FIGURE 4-20.
LETTER "H" (TEST FOR MPU PHASING)

4.0 TROUBLESHOOTING PROCEDURES

4.12 PRINT UNIFORMITY TEST (ELONGATED "E's")

To run the test do the following steps:

1. Load full width (14-15/16 inch wide) six-part paper into the printer.

2. Set Exerciser controls as follows:

◊ Line Length = 132

◊ Character = E

◊ Special = Elong, character

◊ Function = Line Feed (LF)

3. Press the ON LINE pushbutton and print two full pages of the elongated letter E. Place the printer offline.

4. Examine the first and last sheet of both pages of print. Printing should be distinct and uniform with no faded characters as shown in Figure 4-21. If the printout is not satisfactory, check the hammer tip to platen gap per Section 3.17.

Line Length = 132
Character = E
Special = Elong Char
Function = Line Feed

FIGURE 4-21.
LETTER "E" ELONGATED (TEST FOR PRINT UNIFORMITY)

4.0 TROUBLESHOOTING PROCEDURES

4.13 VERTICAL HAMMER ALIGNMENT TEST (UNDERLINE)

To run the underline test, do the following steps:

1. Load full width single part paper into the printer.

2. Set the Exerciser controls as follows:

◊ Line Length = 132 (or corresponding to paper width)

◊ Character = Space or delete

◊ Special = Underline

◊ Function = Line Feed (LF)

3. Place the printer online. Print one half page of underlines. Place printer offline.

4. Examine the printout for straight underlines (Figure 4-22). Check at hammer boundries for distortion. Any deviation from a straight line may indicate hammer(s) is out of adjustment or there is a lack of proper tension on the paper train.

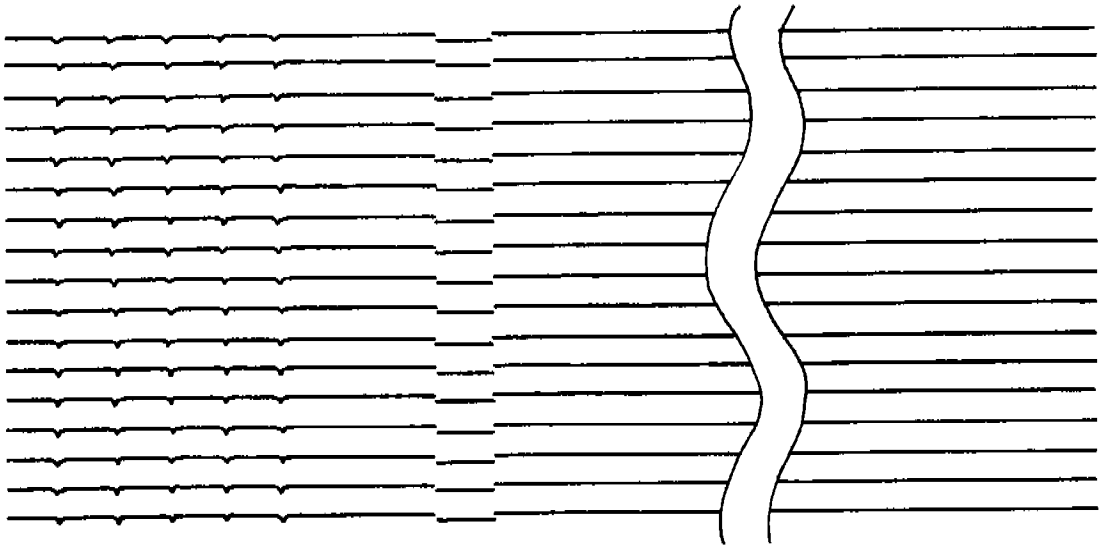

LOOSE PAPER TRAIN

INCORRECTLY ALIGNED HAMMER

Line Length = 132
Character = H
Special = Underline
Function = Line Feed

FIGURE 4-22.
UNDERLINES (TEST FOR VERTICAL HAMMER ALIGNMENT)

4.0 TROUBLESHOOTING PROCEDURES

4.14 GENERAL TESTS

The general tests may be used to verify overall printer operation.

To run either of the tests do the following steps:

1. Load the printer with full width single part paper.

2. Set the Exerciser switches as shown in either Figure 4-23 (Recycle Pattern) or Figure 4-24 (Row Increment).

NOTE: Self-test may be run by simultaneously pressing the CHECK switch and the PAPER ADVANCE switch on the control panel (Figure 4-25) with the printer online.

The self-test pattern is an internally contained test which can be performed while the printer is online to a host computer. Self-test printing will interrupt the data path between the host computer and the online printer without any change in interface status. Data can be lost, therefore self-test should be used with discretion.

3. Place the printer online. Print a page of the test. Take the printer offline.

4. Examine the printout. The results of printing should correspond to Figure 4-20, 4-21, or 4-22.

```
@ABCDEFGHIJKLMNOPQRSTUVWXYZ[\]^_ !"#$%&'()*+,- /0123456789 ,<=>?@ABCDEFGHIJKLMNOPQRSTUVWXYZ[\]^_`abcdefghijklmnopqrstuvwxyz{|}~ @ABC
@ABCDEFGHIJKLMNOPQRSTUVWXYZ[\]^_ !"#$%&'()*+,- /0123456789 ,<=>?@ABCDEFGHIJKLMNOPQRSTUVWXYZ[\]^_`abcdefghijklmnopqrstuvwxyz{|}~ @ABC
@ABCDEFGHIJKLMNOPQRSTUVWXYZ[\]^_ !"#$%&'()*+,- /0123456789 ,<=>?@ABCDEFGHIJKLMNOPQRSTUVWXYZ[\]^_`abcdefghijklmnopqrstuvwxyz{|}~ @ABC
@ABCDEFGHIJKLMNOPQRSTUVWXYZ[\]^_ !"#$%&'()*+,- /0123456789 ,<=>?@ABCDEFGHIJKLMNOPQRSTUVWXYZ[\]^_`abcdefghijklmnopqrstuvwxyz{|}~ @ABC
@ABCDEFGHIJKLMNOPQRSTUVWXYZ[\]^_ !"#$%&'()*+,- /0123456789 ,<=>?@ABCDEFGHIJKLMNOPQRSTUVWXYZ[\]^_`abcdefghijklmnopqrstuvwxyz{|}~ @ABC
@ABCDEFGHIJKLMNOPQRSTUVWXYZ[\]^_ !"#$%&'()*+,- /0123456789 ,<=>?@ABCDEFGHIJKLMNOPQRSTUVWXYZ[\]^_`abcdefghijklmnopqrstuvwxyz{|}~ @ABC
@ABCDEFGHIJKLMNOPQRSTUVWXYZ[\]^_ !"#$%&'()*+,- /0123456789 ,<=>?@ABCDEFGHIJKLMNOPQRSTUVWXYZ[\]^_`abcdefghijklmnopqrstuvwxyz{|}~ @ABC
@ABCDEFGHIJKLMNOPQRSTUVWXYZ[\]^_ !"#$%&'()*+,- /0123456789 ,<=>?@ABCDEFGHIJKLMNOPQRSTUVWXYZ[\]^_`abcdefghijklmnopqrstuvwxyz{|}~ @ABC
@ABCDEFGHIJKLMNOPQRSTUVWXYZ[\]^_ !"#$%&'()*+,- /0123456789 ,<=>?@ABCDEFGHIJKLMNOPQRSTUVWXYZ[\]^_`abcdefghijklmnopqrstuvwxyz{|}~ @ABC
@ABCDEFGHIJKLMNOPQRSTUVWXYZ[\]^_ !"#$%&'()*+,- /0123456789 ,<=>?@ABCDEFGHIJKLMNOPQRSTUVWXYZ[\]^_`abcdefghijklmnopqrstuvwxyz{|}~ @ABC
@ABCDEFGHIJKLMNOPQRSTUVWXYZ[\]^_ !"#$%&'()*+,- /0123456789 ,<=>?@ABCDEFGHIJKLMNOPQRSTUVWXYZ[\]^_`abcdefghijklmnopqrstuvwxyz{|}~ @ABC
@ABCDEFGHIJKLMNOPQRSTUVWXYZ[\]^_ !"#$%&'()*+,- /0123456789 ,<=>?@ABCDEFGHIJKLMNOPQRSTUVWXYZ[\]^_`abcdefghijklmnopqrstuvwxyz{|}~ @ABC
@ABCDEFGHIJKLMNOPQRSTUVWXYZ[\]^_ !"#$%&'()*+,- /0123456789 ,<=>?@ABCDEFGHIJKLMNOPQRSTUVWXYZ[\]^_`abcdefghijklmnopqrstuvwxyz{|}~ @ABC
@ABCDEFGHIJKLMNOPQRSTUVWXYZ[\]^_ !"#$%&'()*+,- /0123456789 ,<=>?@ABCDEFGHIJKLMNOPQRSTUVWXYZ[\]^_`abcdefghijklmnopqrstuvwxyz{|}~ @ABC
@ABCDEFGHIJKLMNOPQRSTUVWXYZ[\]^_ !"#$%&'()*+,- /0123456789 ,<=>?@ABCDEFGHIJKLMNOPQRSTUVWXYZ[\]^_`abcdefghijklmnopqrstuvwxyz{|}~ @ABC
@ABCDEFGHIJKLMNOPQRSTUVWXYZ[\]^_ !"#$%&'()*+,- /0123456789 ,<=>?@ABCDEFGHIJKLMNOPQRSTUVWXYZ[\]^_`abcdefghijklmnopqrstuvwxyz{|}~ @ABC
@ABCDEFGHIJKLMNOPQRSTUVWXYZ[\]^_ !"#$%&'()*+,- /0123456789 ,<=>?@ABCDEFGHIJKLMNOPQRSTUVWXYZ[\]^_`abcdefghijklmnopqrstuvwxyz{|}~ @ABC
@ABCDEFGHIJKLMNOPQRSTUVWXYZ[\]^_ !"#$%&'()*+,- /0123456789 ,<=>?@ABCDEFGHIJKLMNOPQRSTUVWXYZ[\]^_`abcdefghijklmnopqrstuvwxyz{|}~ @ABC
@ABCDEFGHIJKLMNOPQRSTUVWXYZ[\]^_ !"#$%&'()*+,- /0123456789 ,<=>?@ABCDEFGHIJKLMNOPQRSTUVWXYZ[\]^_`abcdefghijklmnopqrstuvwxyz{|}~ @ABC
@ABCDEFGHIJKLMNOPQRSTUVWXYZ[\]^_ !"#$%&'()*+,- /0123456789 ,<=>?@ABCDEFGHIJKLMNOPQRSTUVWXYZ[\]^_`abcdefghijklmnopqrstuvwxyz{|}~ @ABC
@ABCDEFGHIJKLMNOPQRSTUVWXYZ[\]^_ !"#$%&'()*+,- /0123456789 ,<=>?@ABCDEFGHIJKLMNOPQRSTUVWXYZ[\]^_`abcdefghijklmnopqrstuvwxyz{|}~ @ABC
@ABCDEFGHIJKLMNOPQRSTUVWXYZ[\]^_ !"#$%&'()*+,- /0123456789 ,<=>?@ABCDEFGHIJKLMNOPQRSTUVWXYZ[\]^_`abcdefghijklmnopqrstuvwxyz{|}~ @ABC
@ABCDEFGHIJKLMNOPQRSTUVWXYZ[\]^_ !"#$%&'()*+,- /0123456789 ,<=>?@ABCDEFGHIJKLMNOPQRSTUVWXYZ[\]^_`abcdefghijklmnopqrstuvwxyz{|}~ @ABC
@ABCDEFGHIJKLMNOPQRSTUVWXYZ[\]^_ !"#$%&'()*+,- /0123456789 ,<=>?@ABCDEFGHIJKLMNOPQRSTUVWXYZ[\]^_`abcdefghijklmnopqrstuvwxyz{|}~ @ABC
@ABCDEFGHIJKLMNOPQRSTUVWXYZ[\]^_ !"#$%&'()*+,- /0123456789 ,<=>?@ABCDEFGHIJKLMNOPQRSTUVWXYZ[\]^_`abcdefghijklmnopqrstuvwxyz{|}~ @ABC
@ABCDEFGHIJKLMNOPQRSTUVWXYZ[\]^_ !"#$%&'()*+,- /0123456789 ,<=>?@ABCDEFGHIJKLMNOPQRSTUVWXYZ[\]^_`abcdefghijklmnopqrstuvwxyz{|}~ @ABC
@ABCDEFGHIJKLMNOPQRSTUVWXYZ[\]^_ !"#$%&'()*+,- /0123456789 ,<=>?@ABCDEFGHIJKLMNOPQRSTUVWXYZ[\]^_`abcdefghijklmnopqrstuvwxyz{|}~ @ABC
@ABCDEFGHIJKLMNOPQRSTUVWXYZ[\]^_ !"#$%&'()*+,- /0123456789 ,<=>?@ABCDEFGHIJKLMNOPQRSTUVWXYZ[\]^_`abcdefghijklmnopqrstuvwxyz{|}~ @ABC
@ABCDEFGHIJKLMNOPQRSTUVWXYZ[\]^_ !"#$%&'()*+,- /0123456789 ,<=>?@ABCDEFGHIJKLMNOPQRSTUVWXYZ[\]^_`abcdefghijklmnopqrstuvwxyz{|}~ @ABC
@ABCDEFGHIJKLMNOPQRSTUVWXYZ[\]^_ !"#$%&'()*+,- /0123456789 ,<=>?@ABCDEFGHIJKLMNOPQRSTUVWXYZ[\]^_`abcdefghijklmnopqrstuvwxyz{|}~ @ABC
```

Line Length = 132
Character = SRO-96
Special = Recycle
Function = Line Feed

FIGURE 4-23.
RECYCLE PATTERN, UPPER AND LOWERCASE CHARACTERS

4.0 TROUBLESHOOTING PROCEDURES

4.14 GENERAL TESTS (Continued)

```
@@@@@@@@@@@@@@@@@@@@@@@@@@@@@@@@@@@@@@@@@@@@@@@@@@@@@@@@@@@@@@@@@@@@@@@@@@@
AAAAAAAAAAAAAAAAAAAAAAAAAAAAAAAAAAAAAAAAAAAAAAAAAAAAAAAAAAAAAAAAAAAAAAAAAAA
BBBBBBBBBBBBBBBBBBBBBBBBBBBBBBBBBBBBBBBBBBBBBBBBBBBBBBBBBBBBBBBBBBBBBBBBBBB
CCCCCCCCCCCCCCCCCCCCCCCCCCCCCCCCCCCCCCCCCCCCCCCCCCCCCCCCCCCCCCCCCCCCCCCCCCC
DDDDDDDDDDDDDDDDDDDDDDDDDDDDDDDDDDDDDDDDDDDDDDDDDDDDDDDDDDDDDDDDDDDDDDDDDDD
EEEEEEEEEEEEEEEEEEEEEEEEEEEEEEEEEEEEEEEEEEEEEEEEEEEEEEEEEEEEEEEEEEEEEEEEEEE
FFFFFFFFFFFFFFFFFFFFFFFFFFFFFFFFFFFFFFFFFFFFFFFFFFFFFFFFFFFFFFFFFFFFFFFFFFF
GGGGGGGGGGGGGGGGGGGGGGGGGGGGGGGGGGGGGGGGGGGGGGGGGGGGGGGGGGGGGGGGGGGGGGGGGGG
HHHHHHHHHHHHHHHHHHHHHHHHHHHHHHHHHHHHHHHHHHHHHHHHHHHHHHHHHHHHHHHHHHHHHHHHHHH
IIIIIIIIIIIIIIIIIIIIIIIIIIIIIIIIIIIIIIIIIIIIIIIIIIIIIIIIIIIIIIIIIIIIIIIIIII
JJJJJJJJJJJJJJJJJJJJJJJJJJJJJJJJJJJJJJJJJJJJJJJJJJJJJJJJJJJJJJJJJJJJJJJJJJJ
KKKKKKKKKKKKKKKKKKKKKKKKKKKKKKKKKKKKKKKKKKKKKKKKKKKKKKKKKKKKKKKKKKKKKKKKKKK
LLLLLLLLLLLLLLLLLLLLLLLLLLLLLLLLLLLLLLLLLLLLLLLLLLLLLLLLLLLLLLLLLLLLLLLLLLL
MMMMMMMMMMMMMMMMMMMMMMMMMMMMMMMMMMMMMMMMMMMMMMMMMMMMMMMMMMMMMMMMMMMMMMMMMMM
NNNNNNNNNNNNNNNNNNNNNNNNNNNNNNNNNNNNNNNNNNNNNNNNNNNNNNNNNNNNNNNNNNNNNNNNNNN
OOOOOOOOOOOOOOOOOOOOOOOOOOOOOOOOOOOOOOOOOOOOOOOOOOOOOOOOOOOOOOOOOOOOOOOOOOO
PPPPPPPPPPPPPPPPPPPPPPPPPPPPPPPPPPPPPPPPPPPPPPPPPPPPPPPPPPPPPPPPPPPPPPPPPPP
QQQQQQQQQQQQQQQQQQQQQQQQQQQQQQQQQQQQQQQQQQQQQQQQQQQQQQQQQQQQQQQQQQQQQQQQQQQ
RRRRRRRRRRRRRRRRRRRRRRRRRRRRRRRRRRRRRRRRRRRRRRRRRRRRRRRRRRRRRRRRRRRRRRRRRRR
SSSSSSSSSSSSSSSSSSSSSSSSSSSSSSSSSSSSSSSSSSSSSSSSSSSSSSSSSSSSSSSSSSSSSSSSSSS
TTTTTTTTTTTTTTTTTTTTTTTTTTTTTTTTTTTTTTTTTTTTTTTTTTTTTTTTTTTTTTTTTTTTTTTTTTT
UUUUUUUUUUUUUUUUUUUUUUUUUUUUUUUUUUUUUUUUUUUUUUUUUUUUUUUUUUUUUUUUUUUUUUUUUUU
VVVVVVVVVVVVVVVVVVVVVVVVVVVVVVVVVVVVVVVVVVVVVVVVVVVVVVVVVVVVVVVVVVVVVVVVVVV
WWWWWWWWWWWWWWWWWWWWWWWWWWWWWWWWWWWWWWWWWWWWWWWWWWWWWWWWWWWWWWWWWWWWWWWWWWW
XXXXXXXXXXXXXXXXXXXXXXXXXXXXXXXXXXXXXXXXXXXXXXXXXXXXXXXXXXXXXXXXXXXXXXXXXXX
YYYYYYYYYYYYYYYYYYYYYYYYYYYYYYYYYYYYYYYYYYYYYYYYYYYYYYYYYYYYYYYYYYYYYYYYYYY
ZZZZZZZZZZZZZZZZZZZZZZZZZZZZZZZZZZZZZZZZZZZZZZZZZZZZZZZZZZZZZZZZZZZZZZZZZZZ
[[[[[[[[[[[[[[[[[[[[[[[[[[[[[[[[[[[[[[[[[[[[[[[[[[[[[[[[[[[[[[[[[[[[[[[[[[[
\\\\\\\\\\\\\\\\\\\\\\\\\\\\\\\\\\\\\\\\\\\\\\\\\\\\\\\\\\\\\\\\\\\\\\\\\\\
]]]]]]]]]]]]]]]]]]]]]]]]]]]]]]]]]]]]]]]]]]]]]]]]]]]]]]]]]]]]]]]]]]]]]]]]]]]
^^^^^^^^^^^^^^^^^^^^^^^^^^^^^^^^^^^^^^^^^^^^^^^^^^^^^^^^^^^^^^^^^^^^^^^^^^^
```

Line Length = 132
Character = SRO-64
Special = Row Inc
Function = Line Feed

FIGURE 4-24.
UPPERCASE CHARACTERS ROW INCREMENT

4.0 TROUBLESHOOTING PROCEDURES

4.14 GENERAL TESTS (Continued)

```
EEEEEEEEEEEEEEEEEEEEEEEEEEEEEEEEEEEEEEEEEEEEEEEEEEEEEEEEEEEEEEEEEEEEEEEEEEEE
EEEEEEEEEEEEEEEEEEEEEEEEEEEEEEEEEEEEEEEEEEEEEEEEEEEEEEEEEEEEEEEEEEEEEEEEEEEE
EEEEEEEEEEEEEEEEEEEEEEEEEEEEEEEEEEEEEEEEEEEEEEEEEEEEEEEEEEEEEEEEEEEEEEEEEEEE
EEEEEEEEEEEEEEEEEEEEEEEEEEEEEEEEEEEEEEEEEEEEEEEEEEEEEEEEEEEEEEEEEEEEEEEEEEEE
EEEEEEEEEEEEEEEEEEEEEEEEEEEEEEEEEEEEEEEEEEEEEEEEEEEEEEEEEEEEEEEEEEEEEEEEEEEE
EEEEEEEEEEEEEEEEEEEEEEEEEEEEEEEEEEEEEEEEEEEEEEEEEEEEEEEEEEEEEEEEEEEEEEEEEEEE
EEEEEEEEEEEEEEEEEEEEEEEEEEEEEEEEEEEEEEEEEEEEEEEEEEEEEEEEEEEEEEEEEEEEEEEEEEEE
EEEEEEEEEEEEEEEEEEEEEEEEEEEEEEEEEEEEEEEEEEEEEEEEEEEEEEEEEEEEEEEEEEEEEEEEEEEE
EEEEEEEEEEEEEEEEEEEEEEEEEEEEEEEEEEEEEEEEEEEEEEEEEEEEEEEEEEEEEEEEEEEEEEEEEEEE
EEEEEEEEEEEEEEEEEEEEEEEEEEEEEEEEEEEEEEEEEEEEEEEEEEEEEEEEEEEEEEEEEEEEEEEEEEEE
EEEEEEEEEEEEEEEEEEEEEEEEEEEEEEEEEEEEEEEEEEEEEEEEEEEEEEEEEEEEEEEEEEEEEEEEEEEE
EEEEEEEEEEEEEEEEEEEEEEEEEEEEEEEEEEEEEEEEEEEEEEEEEEEEEEEEEEEEEEEEEEEEEEEEEEEE
EEEEEEEEEEEEEEEEEEEEEEEEEEEEEEEEEEEEEEEEEEEEEEEEEEEEEEEEEEEEEEEEEEEEEEEEEEEE
EEEEEEEEEEEEEEEEEEEEEEEEEEEEEEEEEEEEEEEEEEEEEEEEEEEEEEEEEEEEEEEEEEEEEEEEEEEE
EEEEEEEEEEEEEEEEEEEEEEEEEEEEEEEEEEEEEEEEEEEEEEEEEEEEEEEEEEEEEEEEEEEEEEEEEEEE
EEEEEEEEEEEEEEEEEEEEEEEEEEEEEEEEEEEEEEEEEEEEEEEEEEEEEEEEEEEEEEEEEEEEEEEEEEEE
```

FIGURE 4-25.
SELF-TEST

ILLUSTRATED PARTS BREAKDOWN

CONTENTS

General 5.1

P300 Printer Mechanics Assembly P/N 104007 5.2

P300 Printer Mechanics Assembly P/N 105554 5.3

P300 Shuttle Assembly Without Hammer Springs P/N 105045 5.4
P300 Shuttle Assembly Steel Hammer Springs P/N 105058-001
P300 Shuttle Assembly Carbide Hammer Springs P/N 105047-001

P300 Power Supply P/N 104056 5.5

P300 Ribbon Deck Drive Assembly P/N 105035 5.6

P300 Ribbon Deck Drive Sub-Assembly P/N 105530 5.7

P300 Ribbon Deck Drive Assembly P/N 105377 5.8

P300 Ribbon Deck Drive Sub-Assembly P/N 105516 5.9

5.0 ILLUSTRATED PARTS BREAKDOWN

5.1 GENERAL

Section Five contains illustrated parts breakdowns and parts lists for sub-assemblies on the Printronix P300 line printer. To identify each part, match the circled item numbers on the drawings with the item numbers on the associated parts lists.

5.0 ILLUSTRATED PARTS BREAKDOWN

5.2 P300 PRINTER MECHANICS ASSEMBLY
PART NUMBER 104007 REV AB

ITEM NUMBER	DESCRIPTION	PART NUMBER
1	Base Support (Machined)	101101-001
2	Nut, Clinch Self Locking	101528-003
3	Pin, Grooved	101556-005
4	Pin, Spiral	101306-005
5	Strap, Ground	102959-001
6	Plate, Left Side	104959-001
7	Pin, Platen Spring	101410-001
8	Lever, Platen	101102-001
9	Handle, Platen Lever	101134-001
10	Clip, Retaining	101302-001
11	Base, Printer Cabinet	101888-001
12	Plate, Connector Cover	101798-001
13	Mount, Shock	101360-001
14	Foot, Rubber	101570-001
15	Pin, Roll	101319-007
16	Tubing, Heat Shrink	101511-006
17	Plate, Brg, Anti-Rotation Arm	101161-001
18	Plate, Spring Clamp	101166-001
19	Plate, Doubler	101159-001
20	Spring, Anti-Rotation	101452-001
21	Plate, Retaining, Ironer	101183-001
22	Foam, Acoustic, Front	101717-001
23	Assembly, Motor, Paper Feed	101474-001
24	Bracket, Top-of-Form	104373-001
25	N/A	
26	Ironer, Paper	102677-001
27	Grommet	101548-005
28	Assy, Cable, Magnetic Pick Up	101467-001
29	Assembly, Magnetic Pick Up	101494-001
30	Arm, Magnetic Pick Up	101240-001
31	Terminal, Block	101544-001
32	Strip, Marker	101555-001
33	Assembly, Platen	105676-001
34	Collar, Shaft	102400-001
35	Washer, Flat	101526-031
36	Washer, Curved	101552-001
37	Spacer, Platen Lever	102709-001
38	Lubricant, Bearing	101805-001
39	Assembly, Belt Cover	102654-001
40	Clip, Angle 90°	101554-001

5.0 ILLUSTRATED PARTS BREAKDOWN

5.2 P300 PRINTER MECHANICS ASSEMBLY (Continued)
PART NUMBER 104007 REV AB

ITEM NUMBER	DESCRIPTION	PART NUMBER
41	Gusset, Plate, Right Side	101132-001
42	Bracket, Guard, Magentic PU	102633-001
43	Lug, Platen Spring, Right	101662-001
44	Spring, Extension	101663-001
45	Label, Power	102759-001
46	Lug, Platen Spring, Left	105013-001
47	Tape, Foam	102250-004
48	Adhesive, Loctite	101854-001
49	Shuttle Assembly	105058-001
50	Spacer, Platen	101150-002
51	Clip, Platen, Shipping	105010-001
52	Assembly, Pre-Oiled Wick Kit	102745-001
53	Clamp, Cam Wick	102754-001
54	Assy, Capacitor, Motor Starting	101470-001
55	Bracket, Capacitor	101473-001
56	End Cap, Capacitor	101472-001
57	Cage, Card	101152-001
58	Column, Support	101153-001
59	Assembly, Counterweight	102064-001
60	Assembly, Shaft, Lower Counter	101449-001
61	Shaft, Counterweight, Upper	101232-001
62	Guide, Spring, Counterweight	101292-001
63	Washer, Flat	101526-019
64	Spring, Leaf	101429-001
65	Doubler, Spring, Leaf	101430-001
66	Spacer, Spring, Leaf	101431-001
67	Shield, Oil	101683-001
68	Assy, Cable, Ribbon Control	102816-001
69	Tractor, Right Hand	101545-001
70	Shaft, Tractor Support	102095-001
71	Assembly, Paper Motion Sensor	102061-001
--	Tractor only	101545-003
72	Bushing, Tractor Adjust	102094-001
73	Washer, Nylon, Flat	101547-003
74	Knob, Adjust	102100-001
75	Bushing, Left	101143-001
76	Bearing, Nylon	101309-001
77	Ring, Bearing	102957-001
78	Screw, Cap, Socket Head	102997-132
79	Washer, Nylon Shoulder	101518-004
80	N/A	

5.0 ILLUSTRATED PARTS BREAKDOWN

5.2 P300 PRINTER MECHANICS ASSEMBLY (Continued)
PART NUMBER 104007 REV AB

ITEM NUMBER	DESCRIPTION	PART NUMBER
81	Bracket, Form Thickness	101594-001
82	Label, Form Thickness	104515-001
83	Label, Vertical Position	101603-001
84	Assembly, Hammer Driver Board	101200-001
85	Assembly, Power Supply	104056-001
86	Bracket, Cabinet Catch	102012-001
87	Assembly, Varistor	102351-001
88	Assembly, Varistor	102351-002
89	Jumper, Terminator Block	102495-001
90	Terminal Block	101544-004
91	Cover, Strip, Barrier	101724-003
92	Strip, Marker	102628-001
93	Assembly, Capacitor	102591-001
94	Assembly, Jumper Wire	102590-002
95	Assembly, Hammer Driver PCB	101550-001
96	Assembly, Cable, Backplane	105380-001
97	Assembly, Ribbon Deck Drive	105035-001
98	Filter, Hammerbank	102090-001
99	Bracket, Plenum Filter	102089-001
100	Blower, Plenum	102016-001
101	Cover, Cam	101682-001
102	U-Channel, Extruded	101806-001
103	Plate, Cam, Front Cover	101257-001
104	Gasket, Cam, Front Cover	101437-001
105	Adhesive	101537-001
106	Tape, Gasket	102106-001
107	Decal, Card Cage	101661-001
108	Assy, Ground Wire, Hammerbank	102046-001
109	Shim, Counterweight Spring Guide	101564-001
110	Shim, Spring, Shuttle	101565-001
111	Fastener, Clip, "U" Type	102107-001
112	Push Mount, Cable Tie	103294-001
113	Push Mount, Cable Tie	103294-002
114	N/A	
115	Shim, Anti-Rotation	101796-001
116	Washer, Split Lock	102158-007
117	Tie Wrap	101480-001
118	Screw, Set, Socket Locking UNC	102185-005
119	Screw, Set, Socket Locking UNC	102185-003
120	Screw, Hex Head W/ Lock Washer	102786-606

5.0 ILLUSTRATED PARTS BREAKDOWN

5.2 P300 PRINTER MECHANICS ASSEMBLY (Continued)
PART NUMBER 104007 REV AB

ITEM NUMBER	DESCRIPTION	PART NUMBER
121	Screw, Cap, Socket Head	101514-001
122	Screw, Cap, Socket Head	101514-004
123	Screw, Cap, Socket Head	101514-008
124	Screw, Cap, Socket Head	101514-017
125	Screw, Cap, Socket Head ± DP	105434-001
126	Screw, Cap, Socket Head	101514-028
127	Screw, Cap, Socket Head	101514-026
128	Screw, Hex, Socket Flat HD 82	101524-002
129	Screw, Hex, Socket Flat HD 82	101524-005
130	Standoff, Hex	102176-006
131	Washer, Flat	101526-001
132	Washer, Flat	101526-002
133	Washer, Lock, External Tooth	101527-002
134	Washer, Lock, External Tooth	101527-003
135	Washer, Lock, External Tooth	101527-006
136	Connector, Male, Fast-On	101539-003
137	Washer, Flat	101526-018
138	Holder, Cable Tie	101634-002
139	N/A	
140	Screw, Hex Head	101811-001
141	Washer, Split Lock	102158-005
142	Screw, Button Head, Socket	102288-002
143	Screw, Shoulder	102453-001
144	Screw, Phillips HD Sems Recessed	102559-608
145	Nut, Acorn, Nylon	102748-001
146	Screw, Hex HD W/Lock Washer UNC	102786-108
147	Screw, Hex HD W/Lock Washer	102786-110
148	Screw, Hex HD W/Lock Washer	102786-408
149	Screw, Hex HD W/Lock Washer	102786-605
150	Screw, Cap, Socket Head	101514-003
151	Screw, Hex Head W/Lock Washer	102786-612
152	Screw, Hex Head W/Lock Washer	102786-616
153	Nut, Hex W/Lock Washer, Ext TH	102788-100
154	Nut, Hex W/Lock Washer, Ext TH	102788-600
155	Screw, Hex HD Cap W/Lock Washer	102786-921
156	Screw, Socket Head Cap	102997-112
157	Screw, Socket Head Cap	102997-612
158	Screw, Hex Head W/Lock Washer	102786-404
159	Nut, Hex, Plain	101525-005
160	Washer, Flat	101526-003

5.0 ILLUSTRATED PARTS BREAKDOWN

5.2 P300 PRINTER MECHANICS ASSEMBLY (Continued)
PART NUMBER 104007 REV AB

ITEM NUMBER	DESCRIPTION	PART NUMBER
161	Screw, Hex Hd W/L Washer UNC	102786-106
162	Bolt, Carriage	103954-002
163	Nut, Hex, Plain, UNC	101525-010
164	Washer, Flat	101526-012
165	Screw, Socket Head Cap	101514-010
166	Washer, Split Lock	102158-002
167	Washer, Flat	101526-032
168	Adhesive, Loctite 222	101854-002
169	Screw, Socket Head Cap	102997-110
170	Assy, Jumper Wire, Backplane	105501-002
171	Assy, Jumper Wire, Backplane	105501-001
172	Assy, Spline Shaft	101502-002
173	Assy, Flywheel	105014-002
174	Belt, Shuttle	101768-001
175	Spring, Shuttle	101162-001
176	Belt, Paper Feed	103188-001
177	Plate, Right Side	105895-001
178	Motor, Shuttle - 60 Hz	104937-001
179	Motor, Shuttle - 50 Hz	104937-002
180	Paper Motion Sensor	102690-001

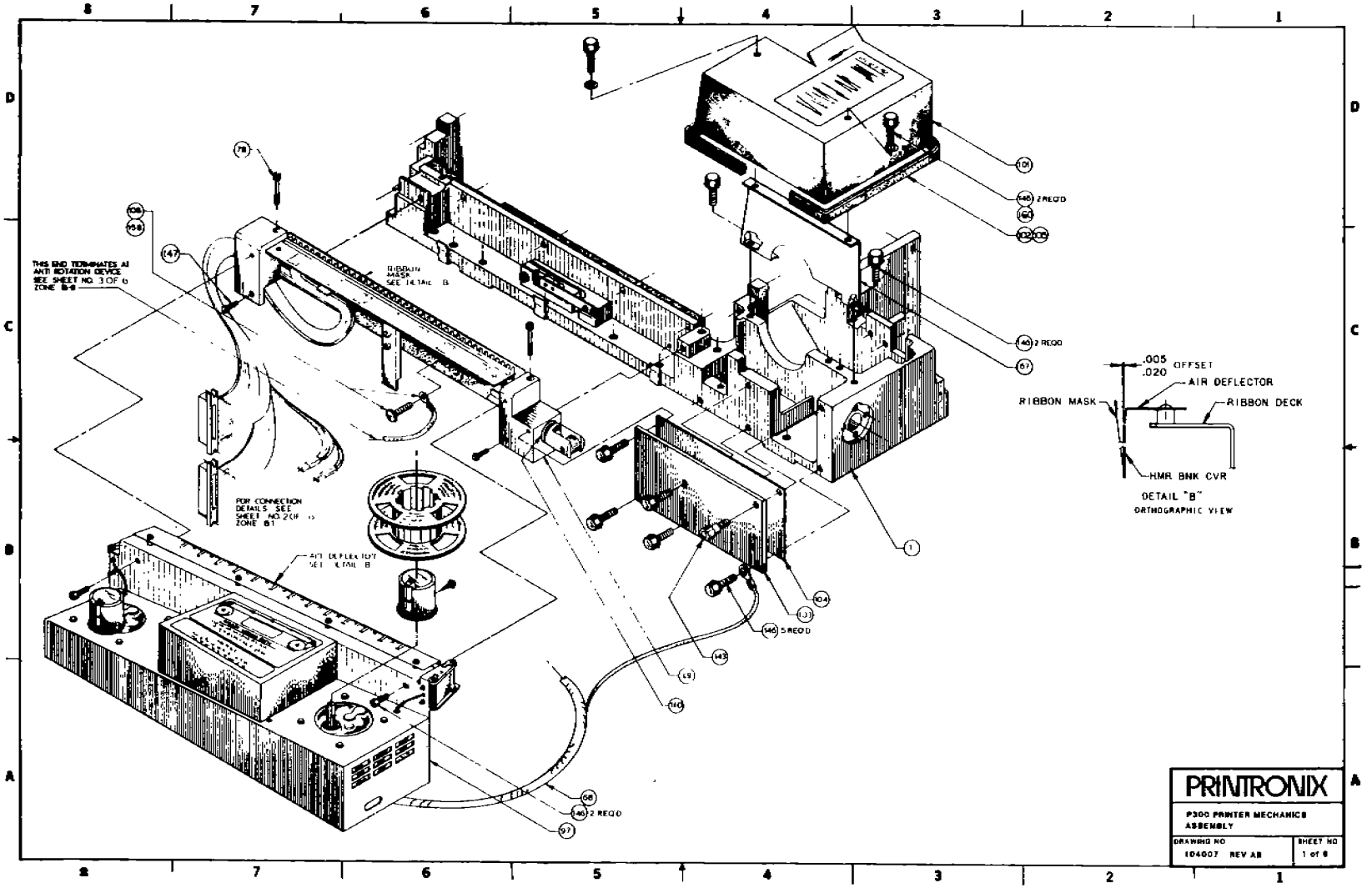
THIS END TERMINATES AT ANTI ROTATION DEVICE SEE SHEET NO. 3 OF 6 ZONE B-9
RIBBON MASK SEE DETAIL B
FOR CONNECTION DETAILS SEE SHEET NO. 2 OF 6 ZONE B1
AIR DEFLECTOR SEE DETAIL B
2 REQ'D
5 REQ'D
.005 .020 OFFSET
AIR DEFLECTOR
RIBBON MASK
RIBBON DECK
HMR BNK CVR
DETAIL "B"
ORTHOGRAPHIC VIEW
PRINTRONIX
P300 PRINTER MECHANICS ASSEMBLY
DRAWING NO 104007 REV AB
SHEET NO 1 of 6

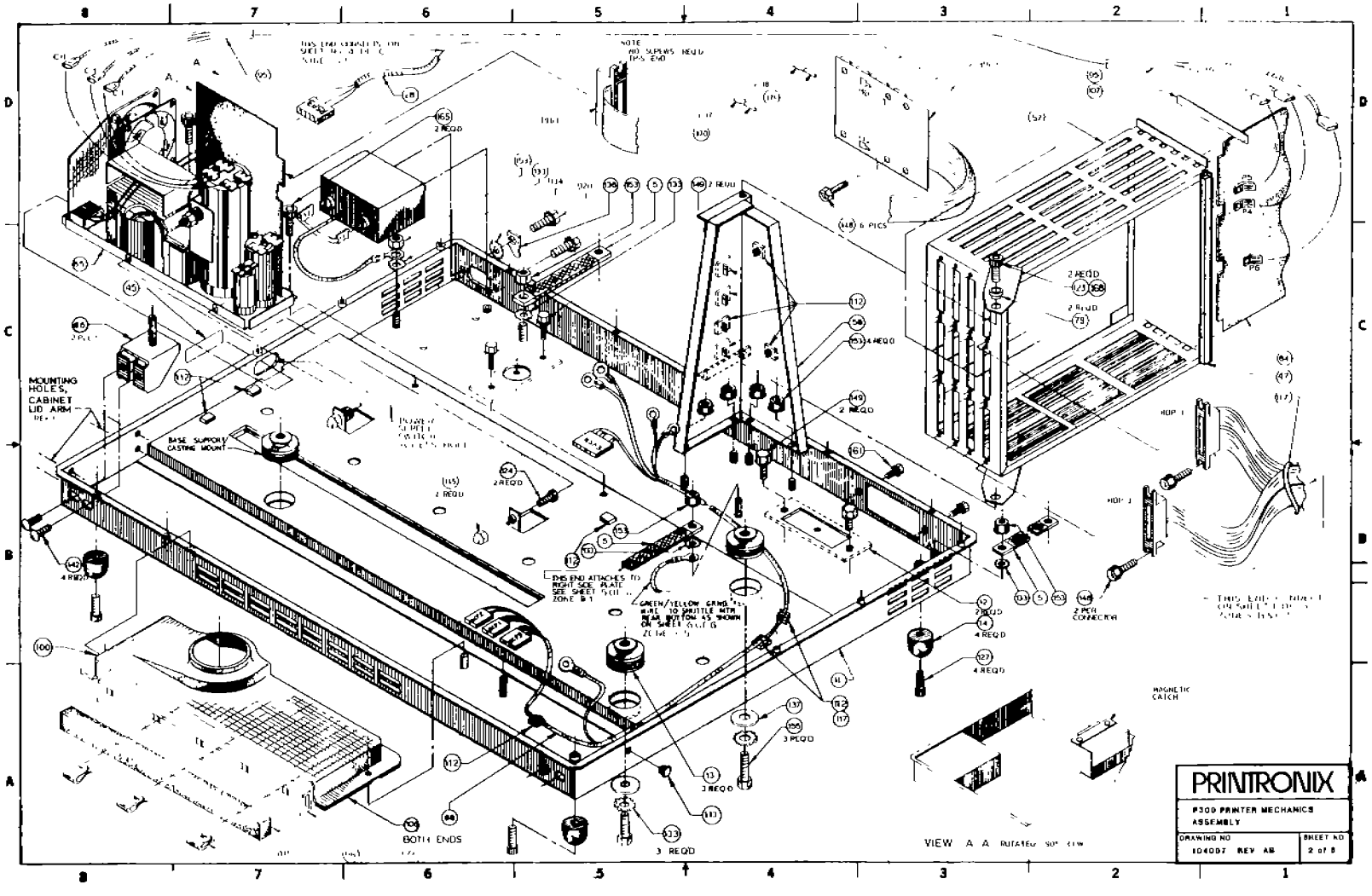
MOUNTING HOLES, CABINET LID ARM
BASE SUPPORT CASTING MOUNT
BOTH ENDS
VIEW A A
MAGNETIC CATCH
PRINTRONIX
P300 PRINTER MECHANICS ASSEMBLY
DRAWING NO
104007 REV AB
SHEET NO
2 of 8

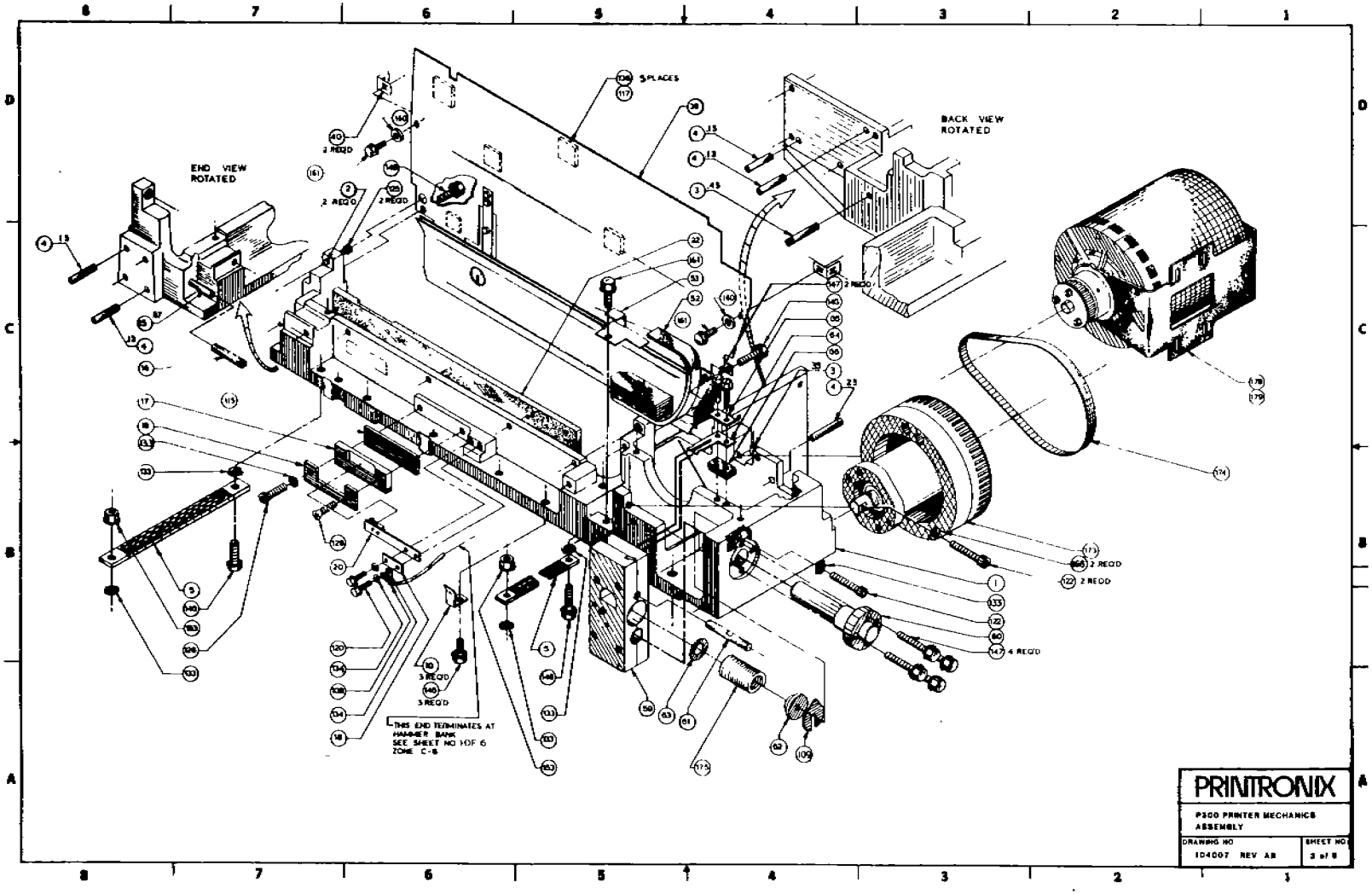
END VIEW ROTATED
BACK VIEW ROTATED
5 PLACES
2 REQ'D
4 REQ'D
3 REQ'D
THIS END TERMINATES AT HAMMER BANK SEE SHEET NO 1 OF 6 ZONE C-8
PRINTRONIX
P300 PRINTER MECHANICS ASSEMBLY
DRAWING NO
104007 REV AB
SHEET NO
3 of 8

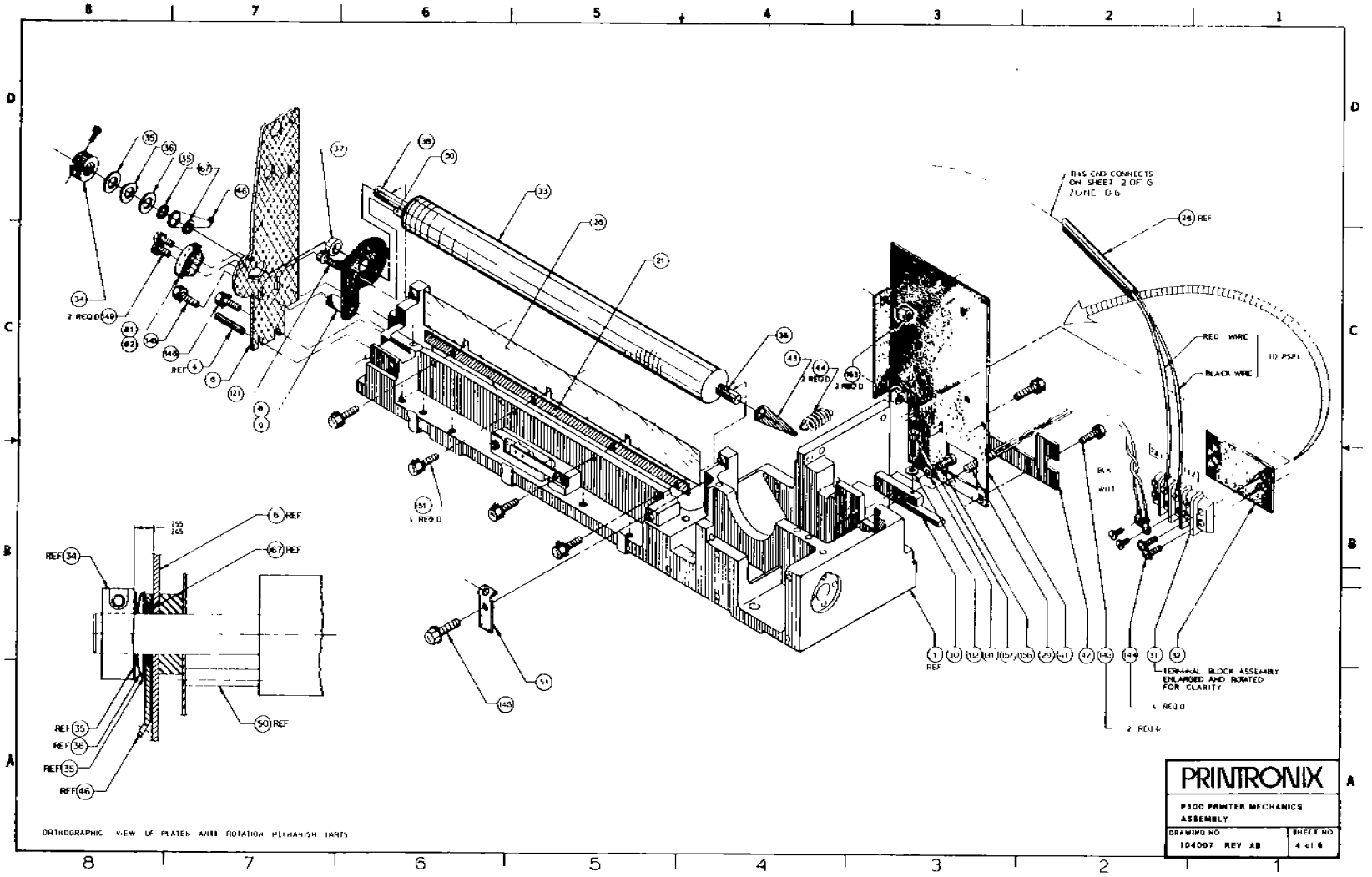
THIS END CONNECTS ON SHEET 2 OF 6 ZONE G 6
RED WIRE
BLACK WIRE
TO PSPL
TERMINAL BLOCK ASSEMBLY ENLARGED AND ROTATED FOR CLARITY
ORTHOGRAPHIC VIEW OF PLATEN AND ROTATION MECHANISM PARTS
PRINTRONIX
P300 PRINTER MECHANICS ASSEMBLY
DRAWING NO 104007 REV AB
SHEET NO 4 of 6

5.0 ILLUSTRATED PARTS BREAKDOWN

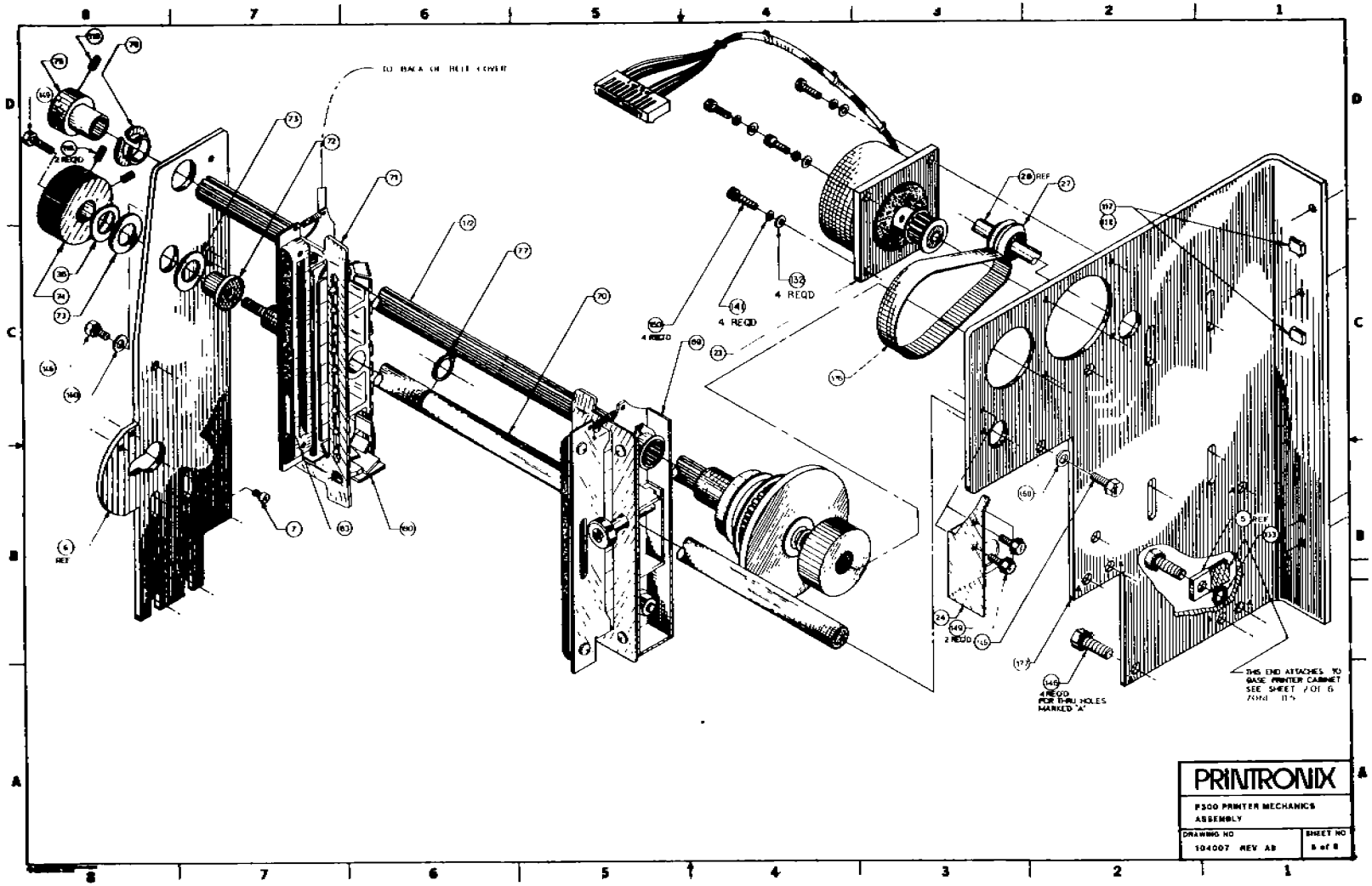

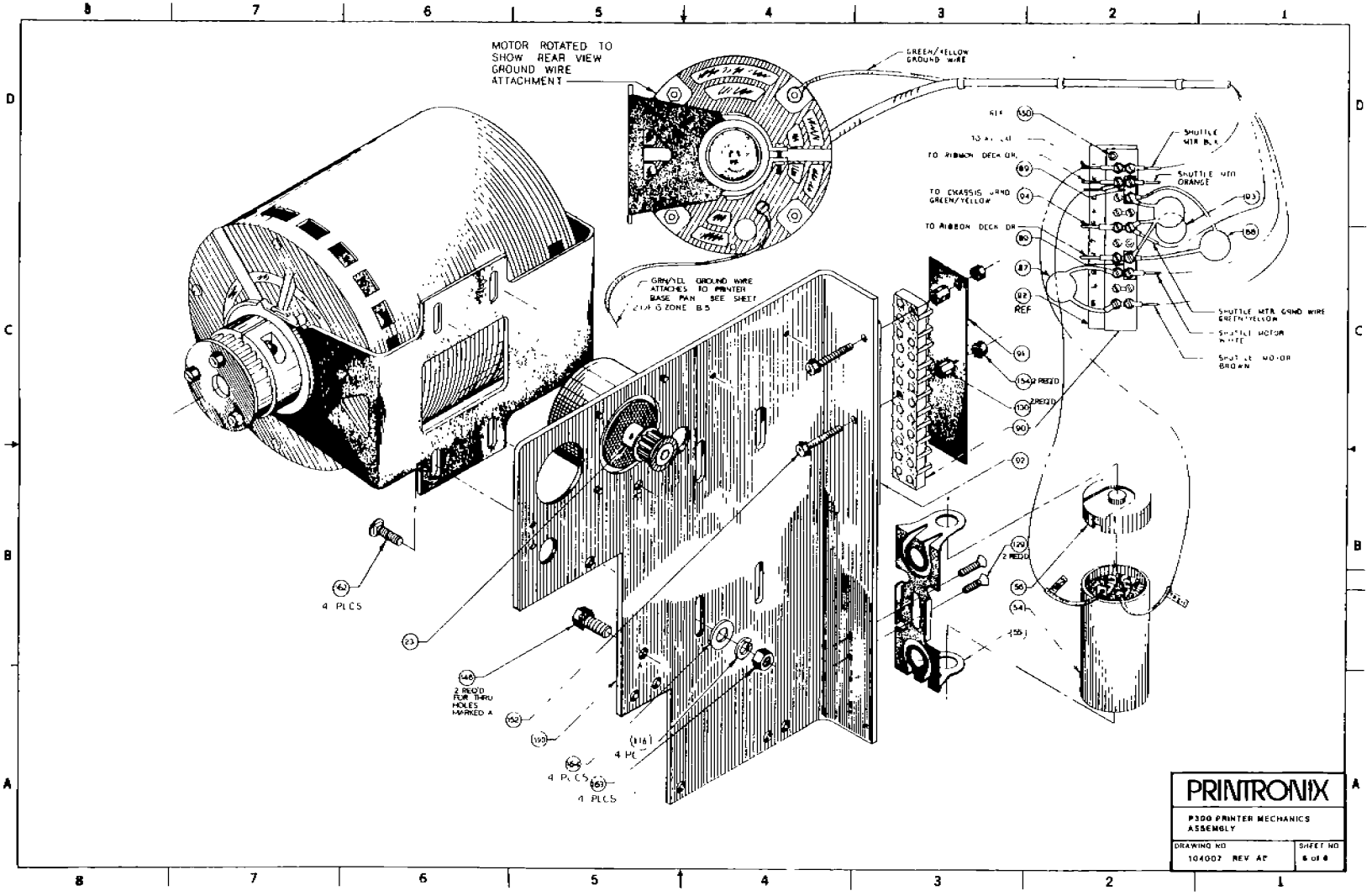
MOTOR ROTATED TO SHOW REAR VIEW GROUND WIRE ATTACHMENT
GREEN/YELLOW GROUND WIRE
TO RIBBON DECK OR
TO CHASSIS GRND GREEN/YELLOW
TO RIBBON DECK OR
SHUTTLE MTR BLK
SHUTTLE MTR ORANGE
SHUTTLE MTR GRND WIRE GREEN/YELLOW
SHUTTLE MOTOR WHITE
SHUTTLE MOTOR BROWN
GRN/YEL GROUND WIRE ATTACHES TO PRINTER BASE PAN SEE SHEET 2 ZONE B5
4 PLCS
2 REQ'D FOR THRU HOLES MARKED A
4 PLCS
4 PLCS
4 PLCS
2 REQ'D
2 REQ'D
2 REQ'D
REF
PRINTRONIX
P300 PRINTER MECHANICS ASSEMBLY
DRAWING NO 104007 REV AF
SHEET NO 6 of 8

5.0 ILLUSTRATED PARTS BREAKDOWN

5.3 P300 PRINTER MECHANICS ASSEMBLY
PART NUMBER 105554 REV AZ

ITEM NUMBER	DESCRIPTION	PART NUMBER
1	Base Support (Machined)	101101-001
2	Nut, Clinch Self Locking	101528-003
3	Pin, Grooved	101556-005
4	Spiral Pin	101306-050
5	Ground Strap	102959-001
6	Plate, Left Side	105739-001
7	Pin, Platen Spring	101410-001
8	Platen Lever	104698-001
9	Platen Lever Handle	101134-001
10	Retaining Clip	101302-001
11	N/A	
12	Plate, Conn. Cover	101798-001
13	Shock Mount	101360-002
14	Foot, Rubber	101570-001
15	Pin, Roll	101319-007
16	N/A	
17	Anti-Rotation Brg Plate	101161-001
18	Spring Clamp Plate	101166-001
19	Doubler Plate	101159-001
20	Spring, Anti-Rotation	101452-001
21	Plate, Retaining, Ironer	101183-001
22	Foam, Acoustic, Front	101717-001
23	Assy, Paper Feed Motor	101474-001
24	Bracket, Top-of-Form	104373-001
25	N/A	
26	Paper Ironer	102677-001
27	Grommet	101548-005
28	Assy, Cable, Mag P.U.	105003-001
29	Assy, Mag. P.U.	101494-001
30	Arm, Mag. P.U.	101240-001
31	Term, Block	101544-001
32	Marker Strip	101555-001
33	Assy, Platen	105676-001
34	Collar, Shaft	102400-001
35	Washer, Flat	101526-031
36	Washer, Curved	101552-001
37	Spacer, Platen Lever	102709-002
38	Lubricant, Bearing	101805-001
39	Belt Cover Assy	102654-002
40	Clip, Angle 90°	101554-001

5.0 ILLUSTRATED PARTS BREAKDOWN

5.3 P300 PRINTER MECHANICS ASSEMBLY (Continued)
PART NUMBER 105554 REV AZ

ITEM NUMBER	DESCRIPTION	PART NUMBER
41	Plate, Rt. Side Gusset	101132-001
42	Brkt, Guard, Mag. P.U.	102633-001
43	Lug, Platen Spring	101662-001
44	Spring, Extension	101663-001
45	Label, Power	102759-001
46	Lug, Platen Spring, Left	105013-001
47	Tape, Foam	102250-004
48	Loctite Adhesive	101854-001
49	N/A	
50	Spacer, Platen	106538-001
51	Clip, Platen Shipping	105010-001
52	Assy, Pre-Oiled Wick Kit	102745-001
53	Clamp, Cam Wick	102754-001
54	Assy, Capacitor, Motor Starting	101470-001
55	Brkt, Capacitor	101473-001
56	End Cap, Capacitor	101472-001
57	Card Cage	101152-001
58	Support Column	101153-001
59	Assy, Counterweight	102064-001
60	Assy, Shaft, Lower Counter	101449-001
61	Shaft, Upper Counterweight	101232-001
62	Spring Guide Counterweight	101292-001
63	Washer, Flat	101526-019
64	Leaf Spring	103029-001
65	Doubler, Leaf Spring	101430-001
66	Spacer, Leaf Spring	101431-001
67	N/A	
68	Cable, Assy, Ribbon Control	105004-001
69	Tractor, Right Hand	101545-001
70	Shaft, Tractor Support	102095-001
71	Assy, Paper Motion Sensor	102061-001
--	Tractor only	101545-003
72	Bushing Tractor Adjust	102094-001
73	Washer, Flat, Nylon	101547-003
74	Knob, Adjust	102100-001
75	Bushing, Left	101143-001
76	Bearing, Nylon	101309-001
77	Ring, Grip External	101551-006
78	Screw, Cap Soc HD	101514-043
79	Nylon Shoulder Washer	101518-005
80	N/A	

5.0 ILLUSTRATED PARTS BREAKDOWN

5.3 P300 PRINTER MECHANICS ASSEMBLY (Continued)
PART NUMBER 105554 REV AZ

ITEM NUMBER	DESCRIPTION	ITEM NUMBER
81	Bracket, Form Thickness	101594-001
82	Label, Form Thickness	104515-001
83	Label, Vertical Position	101603-001
84	Assy, Hammer Driver BD	101200-001
85	Assy, Power Supply	104056-001
86	Brkt, Cab. Catch	105437-001
87	Assy, Varistor	102351-001
88	Assy, Varistor	102351-002
89	Jumper, Term. Block	102495-001
90	Term. Block	101544-004
91	Cover, Barrier Strip	101724-003
92	Marker Strip	102628-001
93	Assy, Capacitor	102591-001
94	Assy, Jumper Wire	102590-002
95	Assy, Cable, Hammer Driver PCBA	101550-001
96	N/A	
97	Ribbon Deck Drive Assy	105377-001
98	Filter, Air Alum	105515-001
99	N/A	
100	N/A	
101	Cover, Cam	106947-001
102	Extrusion, Rubber	106963-001
103	Plate, Cam Front Cover	101257-001
104	Gasket, Cam Front Cover	101437-001
105	N/A	
106	N/A	
107	Card Cage Decal	101661-001
108	Assy, Ground Wire, Hammerbank	102046-001
109	Shim, Counterweight Spring Guide	101564-001
110	Shim, Shuttle Spring	101565-001
111	N/A	
112	Cable Tie, Push Mount	103294-001
113	Cable Tie, Push Mount	103294-002
114	N/A	
115	N/A	
116	N/A	
117	Tie Wr[illegible]	101480-001
118	Screw, Soc Set Locking UNC	102185-005
119	Screw, Soc Set Locking UNC	102185-003
120	Screw, HEX HD W/Lock Washer	102786-606

5.0 ILLUSTRATED PARTS BREAKDOWN

5.3 P300 PRINTER MECHANICS ASSEMBLY (Continued)
PART NUMBER 105554 REV AZ

ITEM NUMBER	DESCRIPTION	PART NUMBER
121	Screw, Soc HD Cap	101514-001
122	Screw, Soc HD Cap	101514-004
123	Screw, Soc HD Cap-UNF	102998-001
124	Screw, Soc HD Cap	101514-017
125	Screw, Platen Adjust	105890-001
126	Screw, Soc HD Cap	101514-028
127	Screw, Soc HD Cap-UNF	102998-003
128	Screw, HEX Soc, Flat HD, 82	101524-002
129	Screw, HEX Soc, Flat HD, 82	101524-005
130	Standoff, HEX	102176-008
131	Washer, Flat	101526-001
132	Washer, Flat	101526-002
133	Lock Washer, Ext. Tooth	101527-002
134	Lock Washer, Ext. Tooth	101527-003
135	Washer, Split Lock	102158-007
136	Conn. Male Fast-on	101539-003
137	Washer, Flat	101526-018
138	Holder, Cable Tie	101634-002
139	N/A	
140	N/A	
141	Washer, Split Lock	102158-005
142	Screw, UNF Button Head Socket	105436-001
143	Screw, Shoulder	102453-001
144	Screw, Sems Phil HD Recessed	102559-608
145	Nut, Nylon Acorn	102748-001
146	Screw, Hex HD W/Lock Washer UNC	102786-108
147	Screw, Hex HD W/Lock Washer	102786-110
148	Screw, Hex HD W/Lock Washer	102786-408
149	Screw, Hex HD W/Lock Washer	102786-605
150	Screw, Soc HD Cap	101514-032
151	Screw, Hex HD W/Lock Washer	102786-612
152	Screw, Hex HD W/Lock Washer	102786-616
153	Nut, Hex W/Ext Tooth Lock Washer	102788-100
154	Nut, Hex W/Ext Tooth Lock Washer	102788-600
155	Screw, Hex HD Cap W/L Washer	102786-921

5.0 ILLUSTRATED PARTS BREAKDOWN

5.3 P300 PRINTER MECHANICS ASSEMBLY (Continued)
PART NUMBER 105554 REV AZ

ITEM NUMBER	DESCRIPTION	PART NUMBER
156	Screw, Soc HD Cap	101514-041
157	Screw, Soc HD Cap	101514-037
158	Screw, Hex HD W/Lock Washer	102786-404
159	Nut, Plain Hex	101525-005
160	Washer, Flat	101526-003
161	Screw, Hex HD W/Lock Washer UNC	102786-106
162	Carriage Bolt	103954-002
163	Nut, Plain Hex UNC	101525-010
164	Washer, Flat	101526-012
165	Screw, Soc HD Cap	101514-010
166	Washer, Split Lock	102158-002
167	Washer, Flat	101526-036
168	Adhesive, Loctite 222	101854-002
169	Screw, Soc HD Cap	101514-040
170	Jumper Wire Assy, Backplane	105501-002
171	Jumper Wire Assy, Backplane	105501-001
172 / 178	N/A	
179	Screw, Hex HD W/Lk Washer	102786-607
180	Screw, Bearing Block P600	103258-001
181	O-Ring, Rubber	106964-001
182	N/A	
183	N/A	
184	N/A	
185	Spline Shaft Assy	101502-002
186	Flywheel Assy	105014-002
187	Shuttle Belt	101768-001
188	Shuttle Spring	101162-001
189	Paper Feed Belt	103188-001
190	Right Side Plate	105895-001
191	Cable Assy, Logic A to Logic B	101497-001
192	Shuttle Assy, Carbide	105047-001
--	Shuttle Assy, Steel	105058-001
193	Base, Ptr Cab Bot Vent, Silencer	105579-001
194	Cable Assy, Back Plane	105380-001
195	Motor, Shuttle - 60 Hz	104937-001
196	Motor, Shuttle - 50 Hz	104937-002
197	Paper Motion Sensor	102690-001

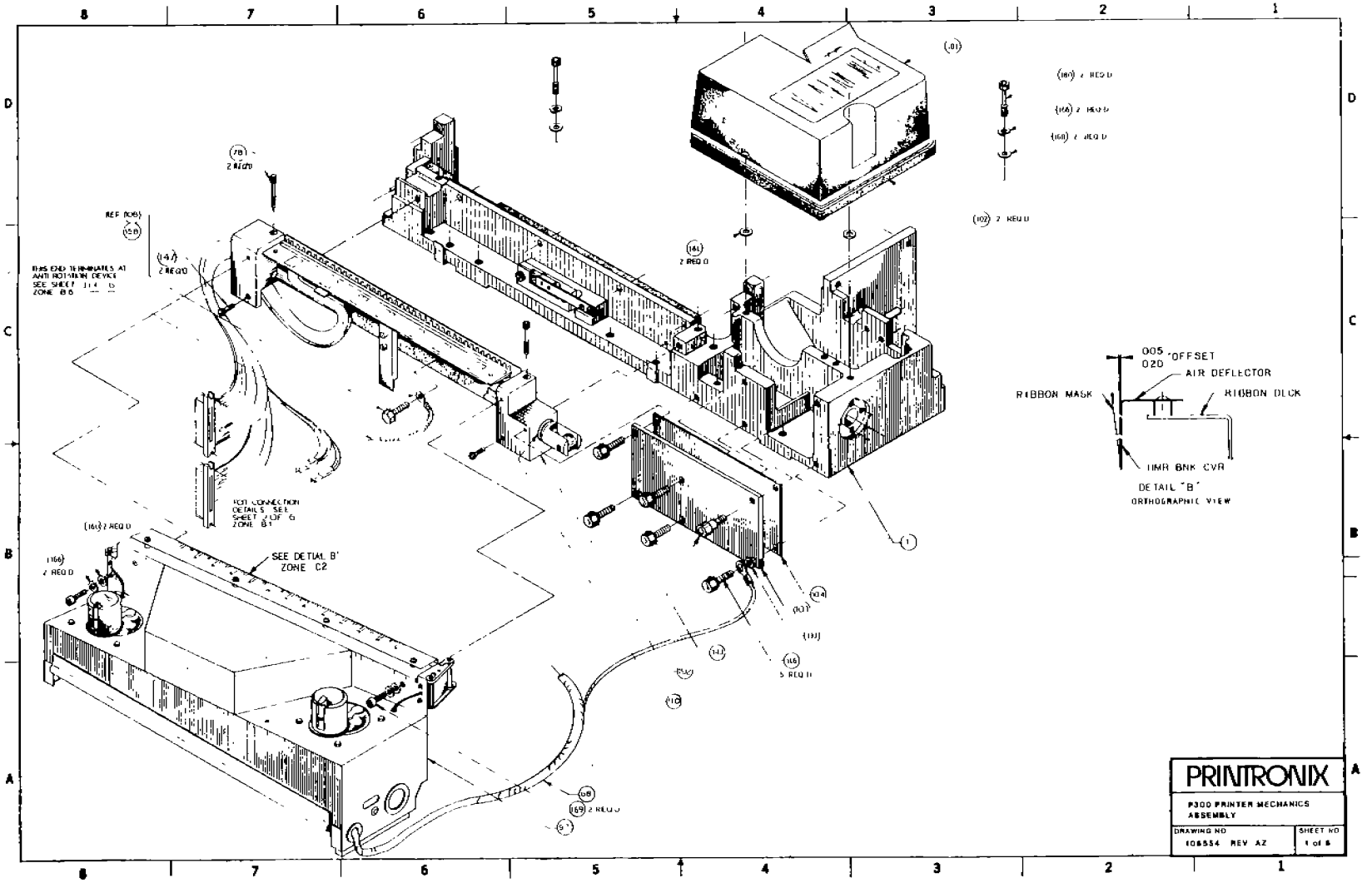
SEE DETAIL 'B'
ZONE C2
005
020
OFFSET
AIR DEFLECTOR
RIBBON MASK
RIBBON DECK
DETAIL "B"
ORTHOGRAPHIC VIEW
PRINTRONIX
P300 PRINTER MECHANICS
ASSEMBLY
DRAWING NO
106554 REV A2
SHEET NO
1 of 6

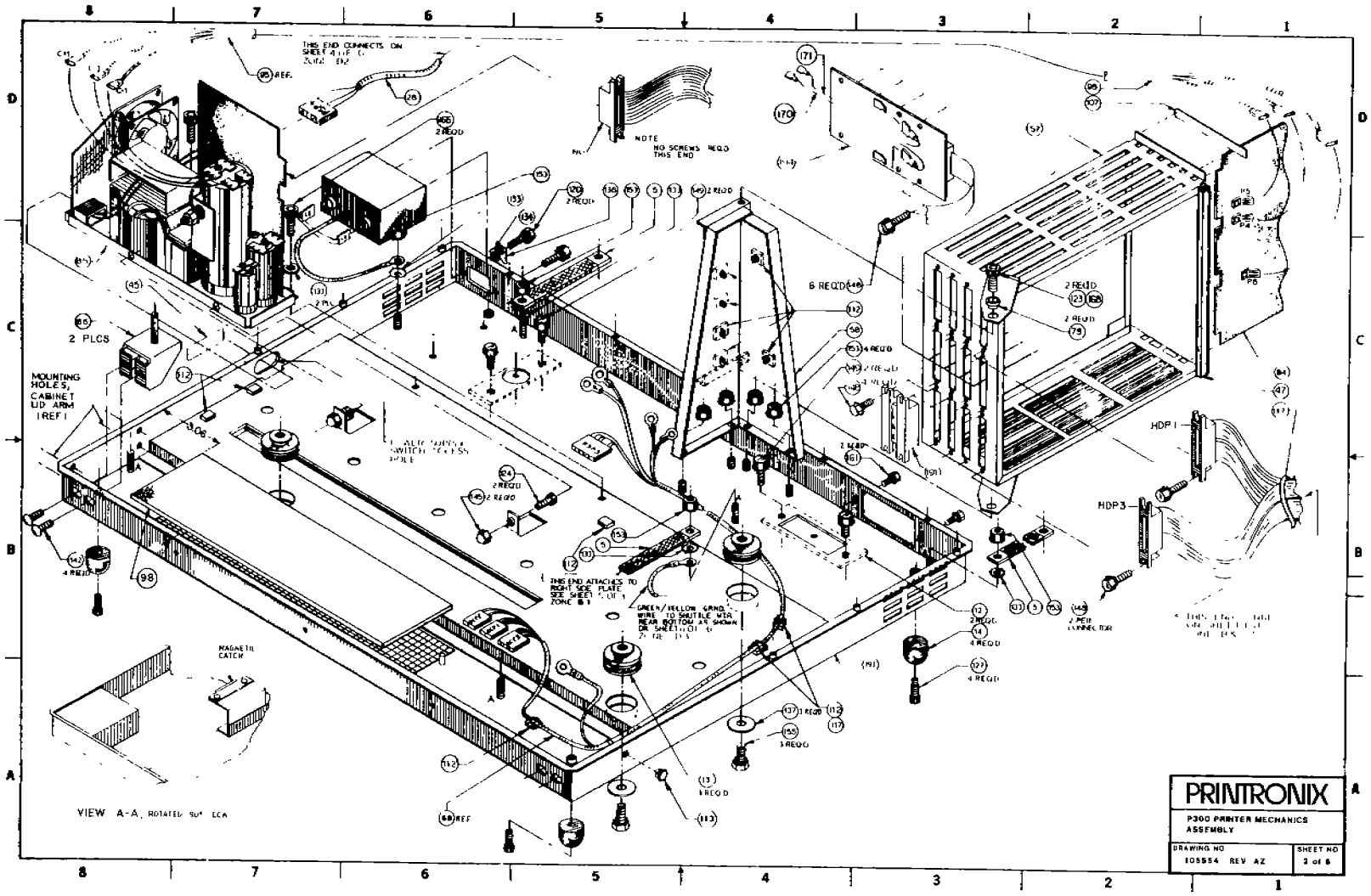
THIS END CONNECTS ON SHEET 4 of 6 ZONE D2
NOTE
NO SCREWS REQ'D THIS END
2 PLCS
MOUNTING HOLES, CABINET LID ARM (REF)
6 REQ'D
2 REQ'D
HDP1
HDP3
THIS END ATTACHES TO RIGHT SIDE PLATE SEE SHEET 5 OF 6 ZONE B1
GREEN/YELLOW GRND. WIRE TO SHUTTLE WIRE REAR BOTTOM AS SHOWN ON SHEET 1 OF 6 ZONE B1
MAGNETIC CATCH
VIEW A-A, ROTATED 90° CCW
PRINTRONIX
P300 PRINTER MECHANICS ASSEMBLY
DRAWING NO 105554 REV A2
SHEET NO 2 of 6

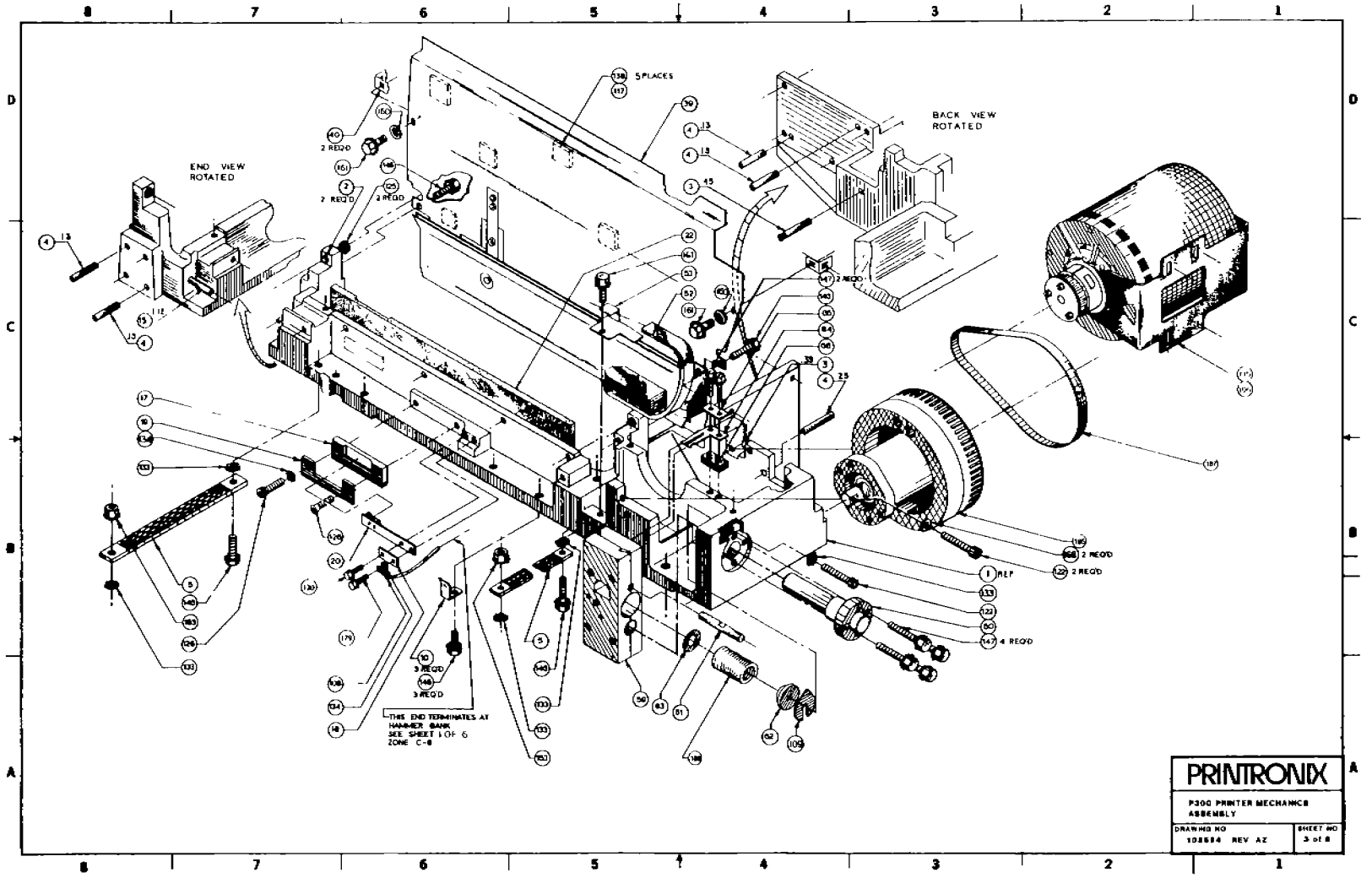
END VIEW ROTATED
BACK VIEW ROTATED
5 PLACES
2 REQ'D
2 REQ'D
2 REQ'D
2 REQ'D
2 REQ'D
2 REQ'D
REF
4 REQ'D
3 REQ'D
3 REQ'D
THIS END TERMINATES AT HAMMER BANK SEE SHEET 1 OF 6 ZONE C-8
PRINTRONIX
P300 PRINTER MECHANICS ASSEMBLY
DRAWING NO 108884 REV A2
SHEET NO 3 of 8

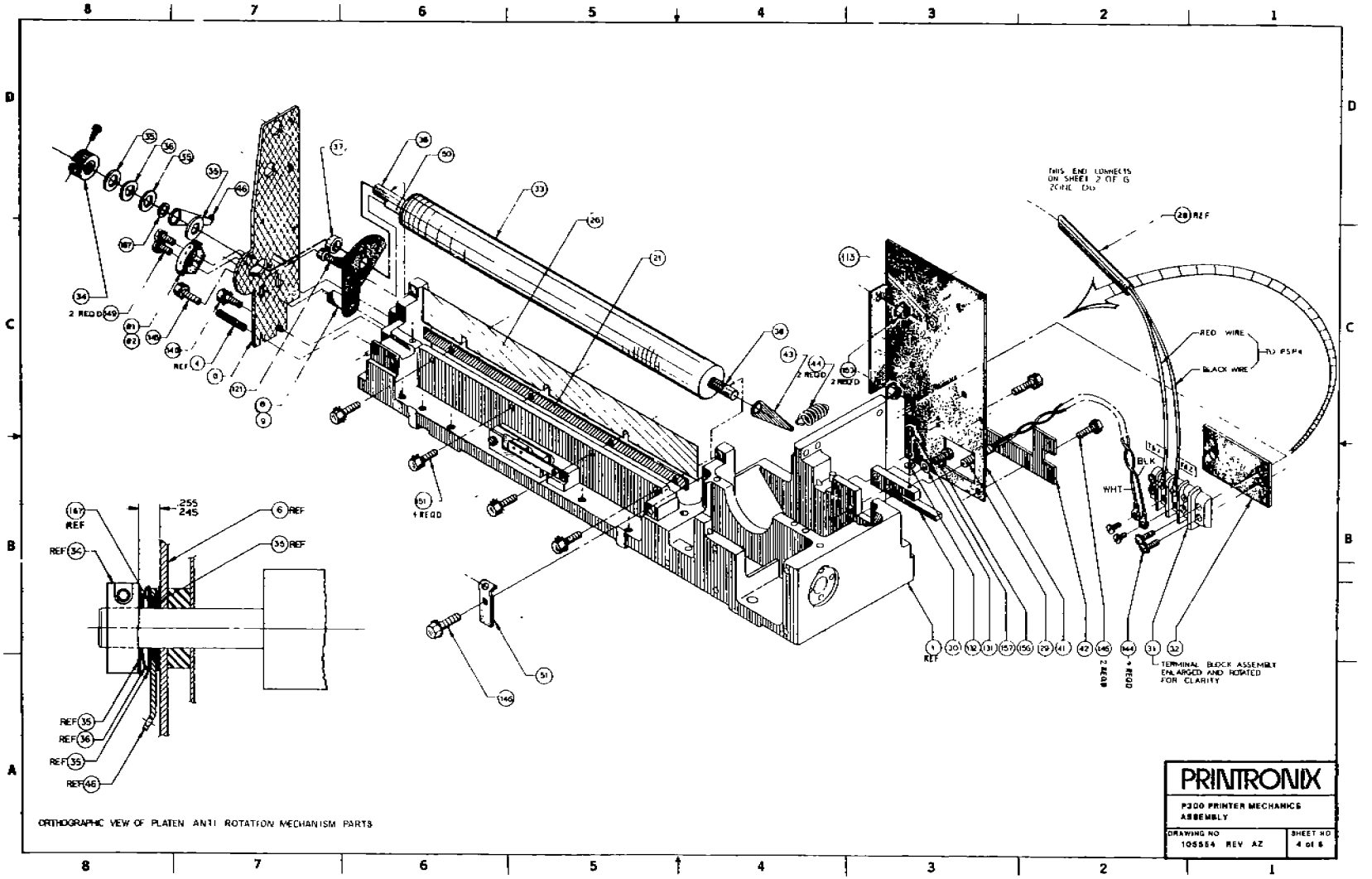
THIS END CONNECTS ON SHEET 2 OF 6 ZONE D6
RED WIRE
BLACK WIRE
TO PSP4
BLK
WHT
TERMINAL BLOCK ASSEMBLY ENLARGED AND ROTATED FOR CLARITY
ORTHOGRAPHIC VIEW OF PLATEN ANTI ROTATION MECHANISM PARTS
PRINTRONIX
P300 PRINTER MECHANICS ASSEMBLY
DRAWING NO 105554 REV AZ
SHEET NO 4 of 6

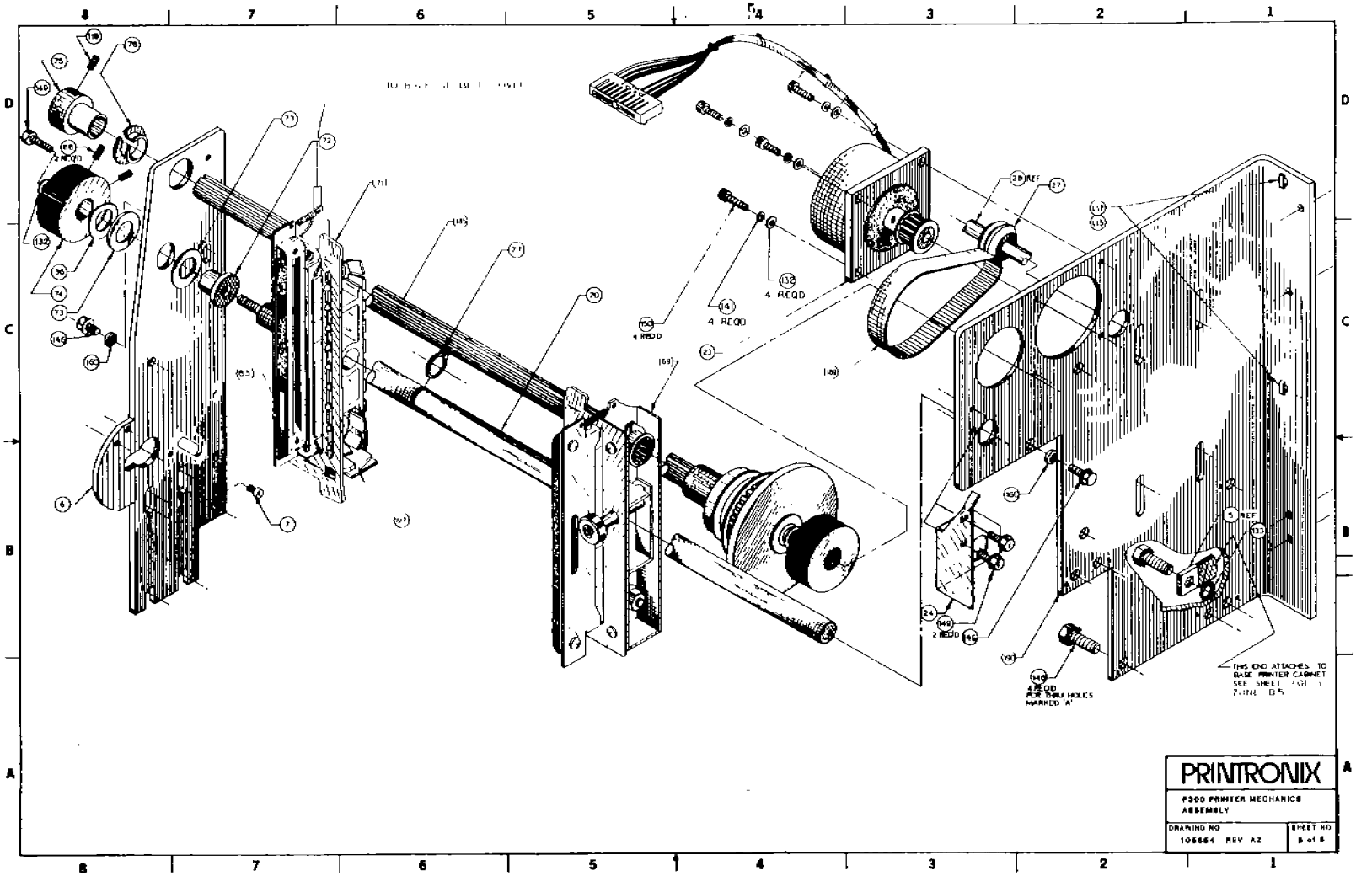
4 REQD
4 REQD
4 REQD
2 REQD
4 REQD
FOR THRU HOLES
MARKED 'A'
THIS END ATTACHES TO
BASE PRINTER CABINET
PRINTRONIX
P300 PRINTER MECHANICS
ASSEMBLY
DRAWING NO
106564 REV A2
SHEET NO
5 of 5

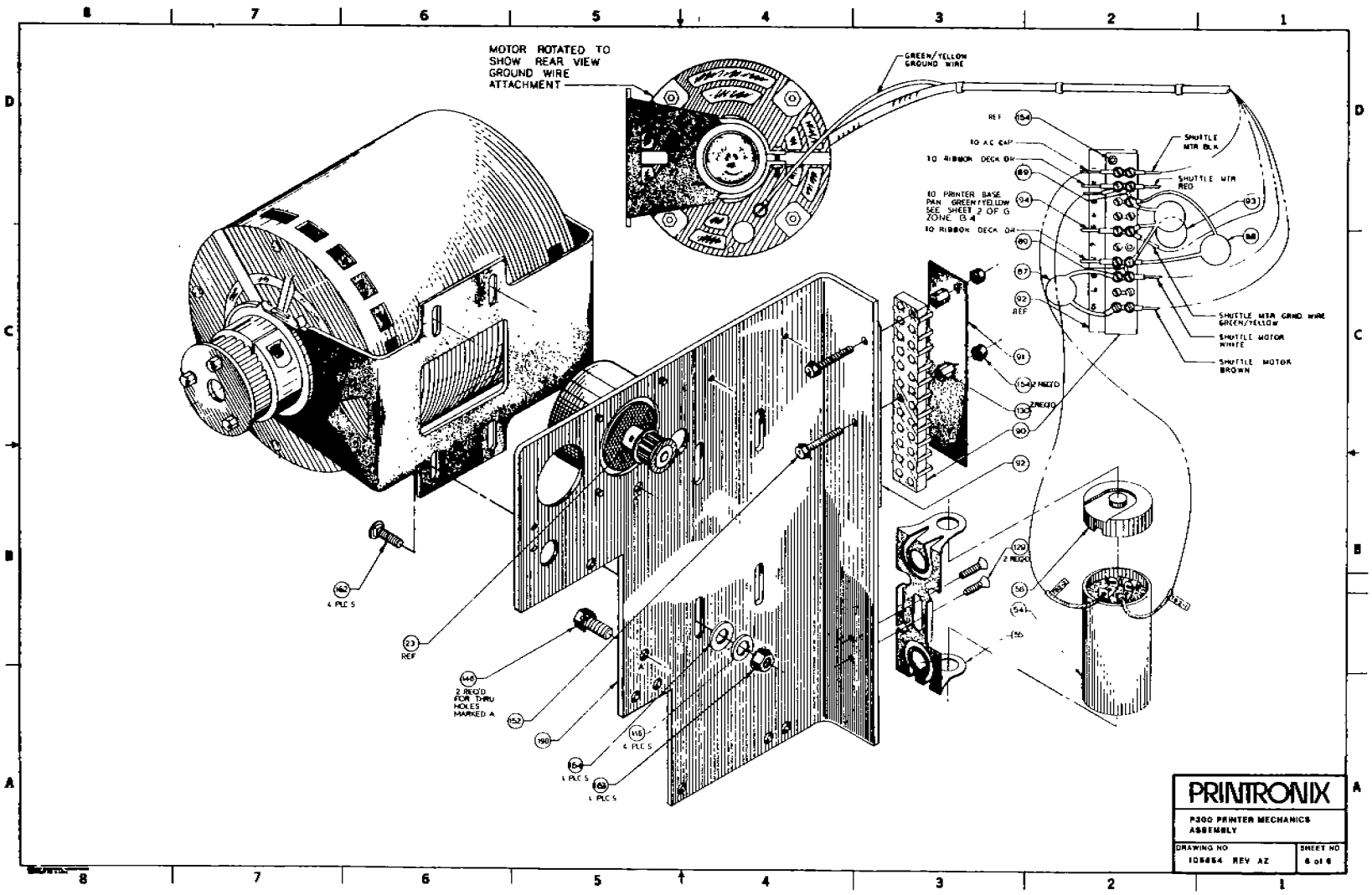
MOTOR ROTATED TO SHOW REAR VIEW GROUND WIRE ATTACHMENT
GREEN/YELLOW GROUND WIRE
REF
154
TO A.C. CAP
TO RIBBON DECK OR
89
TO PRINTER BASE PAN GREEN/YELLOW SEE SHEET 2 OF 6 ZONE B4
TO RIBBON DECK OR
90
87
92 REF
SHUTTLE MTR BLK
SHUTTLE MTR RED
93
88
SHUTTLE MTR GRND WIRE GREEN/YELLOW
SHUTTLE MOTOR WHITE
SHUTTLE MOTOR BROWN
91
154 2 REQ'D
134
2 REQ'D
90
92
129
2 REQ'D
56
54
156
162
4 PLC S
23
REF
148
2 REQ'D FOR THRU HOLES MARKED A
152
190
118
4 PLC S
164
4 PLC S
168
4 PLC S
PRINTRONIX
P300 PRINTER MECHANICS ASSEMBLY
DRAWING NO
108864 REV A2
SHEET NO
6 of 6

5 0 ILLUSTRATED PARTS BREAKDOWN

5 4 P300 SHUTTLE ASSEMBLY WITHOUT HAMMER SPRINGS
PART NUMBER 105045 REV AC

P300 SHUTTLE ASSEMBLY STEEL HAMMER SPRINGS
PART NUMBER 105058-001

P300 SHUTTLE ASSEMBLY CARBIDE HAMMER SPRINGS
PART NUMBER 105047-001

ITEM NUMBER	DESCRIPTION	PART NUMBER
1	N/A	
2	Hammerbank PCB Assy	101195-001
3	Screw, High STR, Int Hex, Soc HD	105575-001
4	Hammerbank PCBA BRKT	101754-001
5	Plate, Clamp Hammer Spring	106713-001
6	Adhesive, Cyanoacrylate	101537-001
7	Hammerbank Cable Clamp, Inner	101377-001
8	Hammerbank Cable Clamp, Outer	101378-001
9	Coil, Hammer	103601-001
10	Hammerbank Epoxy Assy	105618-001
11	Hammerbank Cover Assy	105075-002
12	Screw, Hex HD. Ind. Ext TH L.W.	102786-108
13	Screw, Hex HD, Ind, Ext TH L.W.	102786-404
14	Screw, Hex HD, Ind. Ext TH L.W.	102786-406
15	Screw, Cap Soc. HD	101514-025
16	Spacer, Strip Adhesive Backed	105639-006
17	Tubing, Plastic	101511-007
18	Spacer, Nylon	106520-002
19	Washer, Lock Ext. TH	101527-002
20	Washer, Lock	101527-003
21	Roll Pin	101319-001
22	Yoke	101167-001
23	Yoke Washer	101184-001
24	Cam Follower	101315-001
25	Arm, Anti-Rotation	101235-001
26	Pin, Spiral	101306-001
27	Shim, Shuttle Spring	101565-001
28	Mounting Block Assy, Right	104302-001
29	Mounting Block Assy, Right	106662-001
30	Mounting Block Assy, Left	104303-001
31	Mounting Block Assy, Left	106663-001
32	N/A	
33	Shuttle Spring	101162-001
34	Shuttle Spring	103957-001
35	Hammer Spring Assy, Steel Tip	101127-001
36	Hammer Spring Assy, CBD, Tip	103949-001

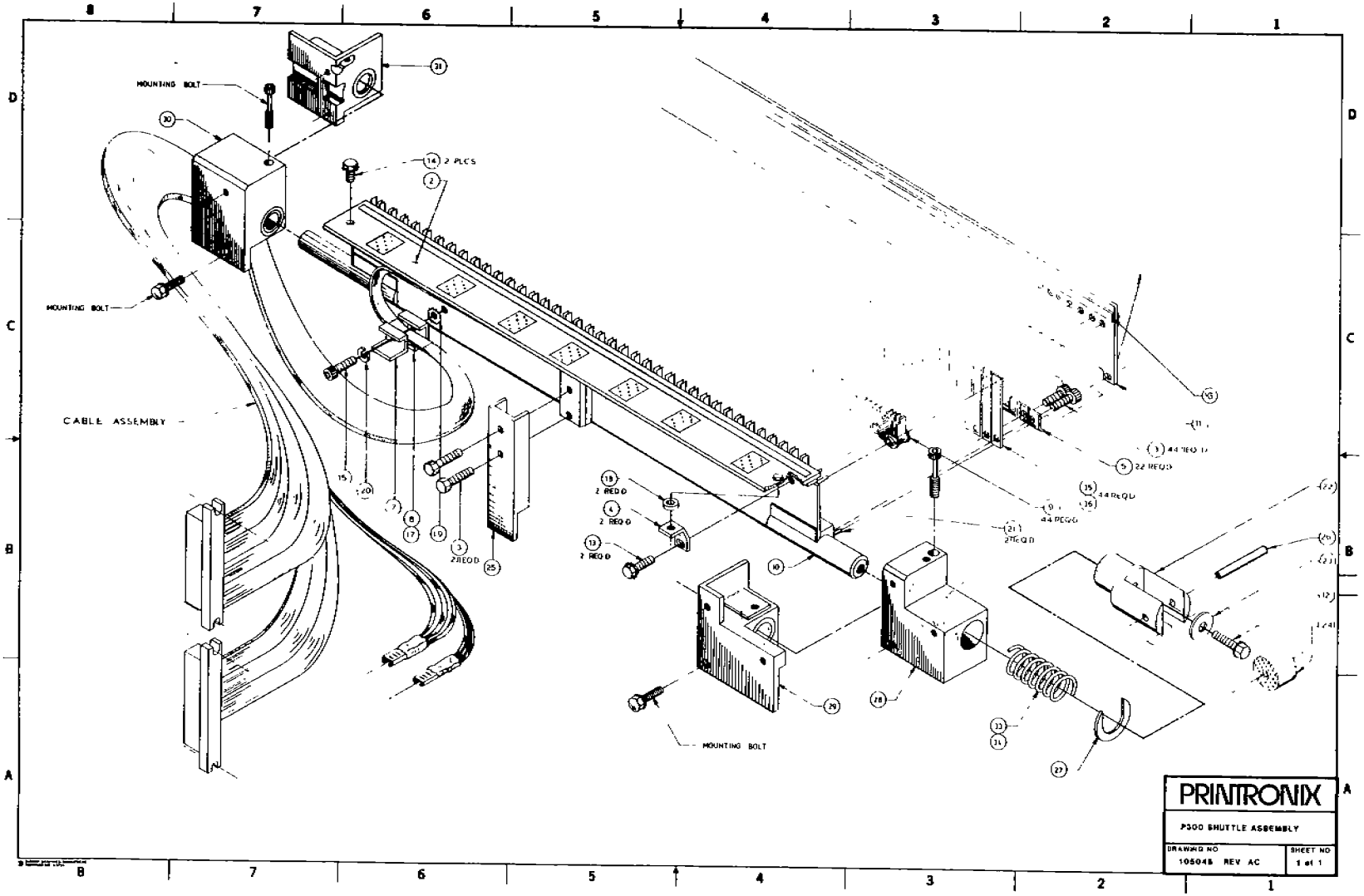
MOUNTING BOLT
MOUNTING BOLT
CABLE ASSEMBLY
2 PLCS
2 REQ'D
2 REQ'D
2 REQ'D
2 REQ'D
44 REQ'D
22 REQ'D
44 REQ'D
44 REQ'D
MOUNTING BOLT
PRINTRONIX
P300 SHUTTLE ASSEMBLY
DRAWING NO
105045 REV AC
SHEET NO
1 of 1

5.0 ILLUSTRATED PARTS BREAKDOWN

5.5 P300 POWER SUPPLY ASSEMBLY
PART NUMBER 104056 REV AA

ITEM NUMBER	DESCRIPTION	PART NUMBER
1	Chassis	105445-001
2	Transformer	101832-001
3	Cover, Transformer	104740-001
4	Choke	102039-001
5	PCBA, Power Supply	105018-001
6	Capacitor, 78K uF, 40 VDC	101372-001
7	Capacitor, 31K uF, 15 VDC	101372-002
8	Capacitor, 4K uF, 40 VDC	101372-003
9	Holder, Fuse	101389-001
10	Diode, IN3890	102146-001
11	Rectifier	101402-001
12	Switch, Power	101529-001
13	Fan, Axial 4140-01-128-0662	101388-001
14	Rectifier	101402-002
15	Latch, Magnetic	101531-001
16	Heat Sink, Power Supply	101824-001
17	Cover, Switch, Power Supply	105442-001
18	Spacer, Round	102029-001
19	Fuse, Slow Blow	101387-120
20	Tubing, Heat Shrinkable	101511-006
21	Tie Wrap	101480-001
22	Connector, Male 45°, .250	103718-002
23	Connector, Male 45°, .250	103718-003
24	Grease, Silicone	101615-002
25	Cable Tie, Push Mount	103294-001
26	Bushing, Teflon	102516-001
27	Wire Harness, Power Supply	102703-001
28	Screw, Hex Socket, Flat Head	101524-002
29	Screw, Hex, Ind/Ext TH. L.W.	102786-406
30	Screw, Hex, Ind/Ext TH. L.W.	102786-610
31	Screw, Hex, Ind/Ext TH. L.W.	102786-106
32	Screw, Hex, Ind/Ext TH. L.W.	102786-824
33	Screw, Phillips W/Ext. TH. L.W.	102559-603
34	N/A	
35	Washer, Lock Int. Tooth	102518-002
36	Washer, Lock Ext. Tooth	101527-002
37	N/A	
38	Washer, Flat	101526-002
39	Washer, Flat	101526-003
40	Washer, Flat	101526-010

5.0 ILLUSTRATED PARTS BREAKDOWN

5.5 P300 POWER SUPPLY ASSEMBLY (Continued)
PART NUMBER 104056 REV AA

ITEM NUMBER	DESCRIPTION	PART NUMBER
41	Washer, Flat	101526-011
42	Washer, Flat	101526-014
43	N/A	
44	N/A	
45	Washer, Mica	102515-001
46	Nut, Hex/Ext TH. L.W.	102788-100
47	N/A	
48	Nut, Hex/Ext TH. L.W.	102788-600
49	Nut, Hex/Ext TH. L.W.	102788-800
50	Nut, Hex/Ext TH. L.W.	102789-100
51	N/A	
52	N/A	
53	Label, Fuse Change, CSA	103154-001
54	N/A	
55	N/A	104056-001
56	N/A	
57	N/A	
58	N/A	
59	Resistor Assy	105480-001
60	Resistor Assy	105480-002
61	Resistor Assy	105480-003
62	Bracket, Capacitor, 3 Legged	105752-002
63	Bracket, Capacitor, 3 Legged	105752-001
64	Bracket, Capacitor, 2 Legged	105753-001
65	Screw, Phillips W/Ext TH L.W.	102559-134
66	Nut, Square	105770-002
67	Nut, Square	105770-001
68	Screw, Phillips W/Ext TH. L.W.	102559-608
69	Screw, Phillips W/Ext TH. L.W.	102559-133
70	Label, Electrical Hazard	105617-001
71	Cable Assy	105492-005

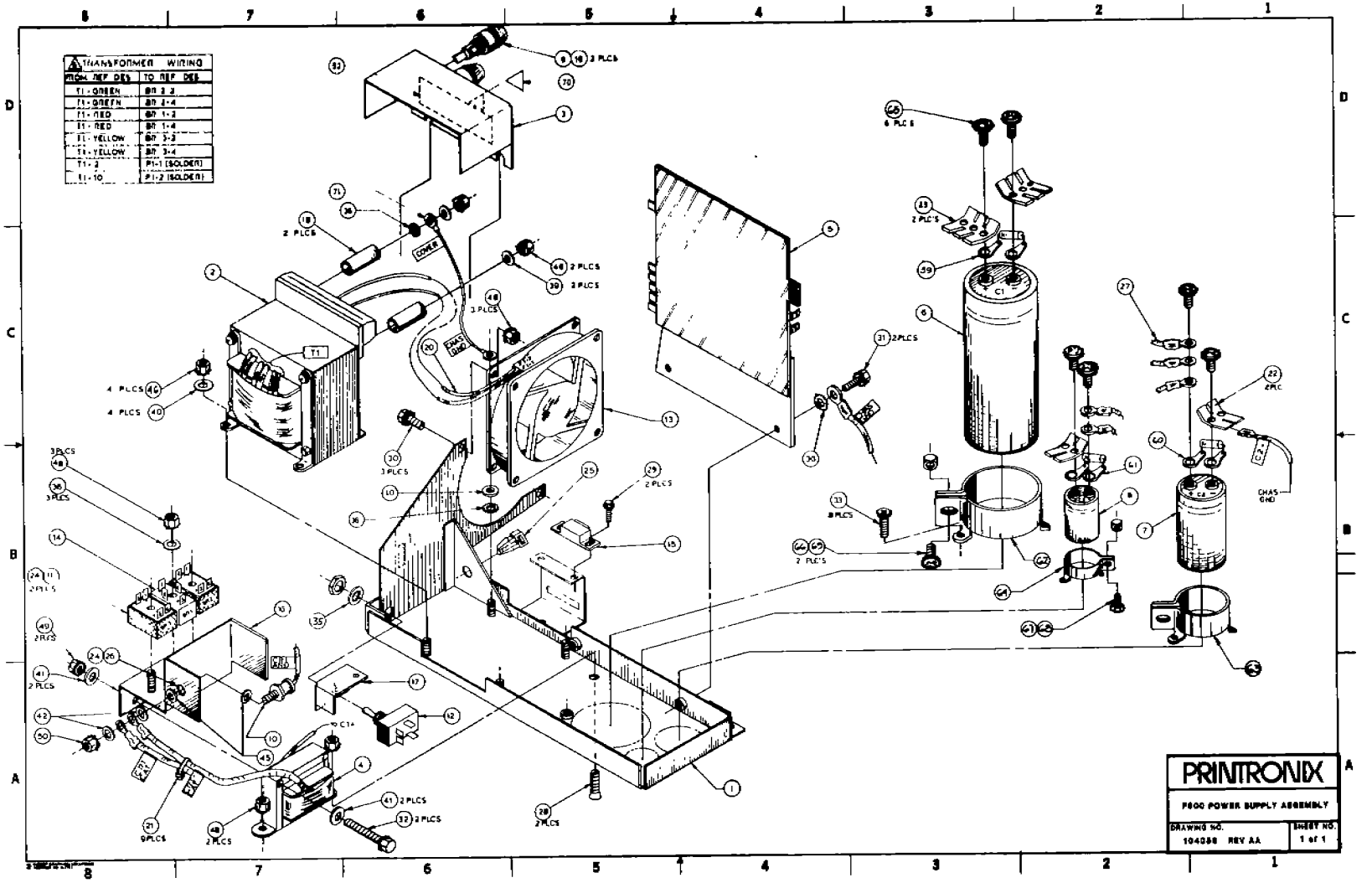
TRANSFORMER WIRING
FROM REF DES
TO REF DES
T1 - GREEN
BR 2-3
T1 - GREEN
BR 2-4
T1 - RED
BR 1-2
T1 - RED
BR 1-4
T1 - YELLOW
BR 3-2
T1 - YELLOW
BR 3-4
T1 - 2
P1-1 (SOLDER)
T1 - 10
P1-2 (SOLDER)
PRINTRONIX
P300 POWER SUPPLY ASSEMBLY
DRAWING NO.
104088 REV AA
SHEET NO.
1 of 1

5.0 ILLUSTRATED PARTS BREAKDOWN

5.6 P300 RIBBON DECK DRIVE ASSEMBLY
PART NUMBER 105035 REV G

ITEM NUMBER	DESCRIPTION	PART NUMBER
1	Ribbon Deck Sub Assy	105530-001
2	Cover, Blower Motor	105037-001
3	Screw, Hex HD. Ind/Ext TH. L.W.	102786-106

5.0 ILLUSTRATED PARTS BREAKDOWN

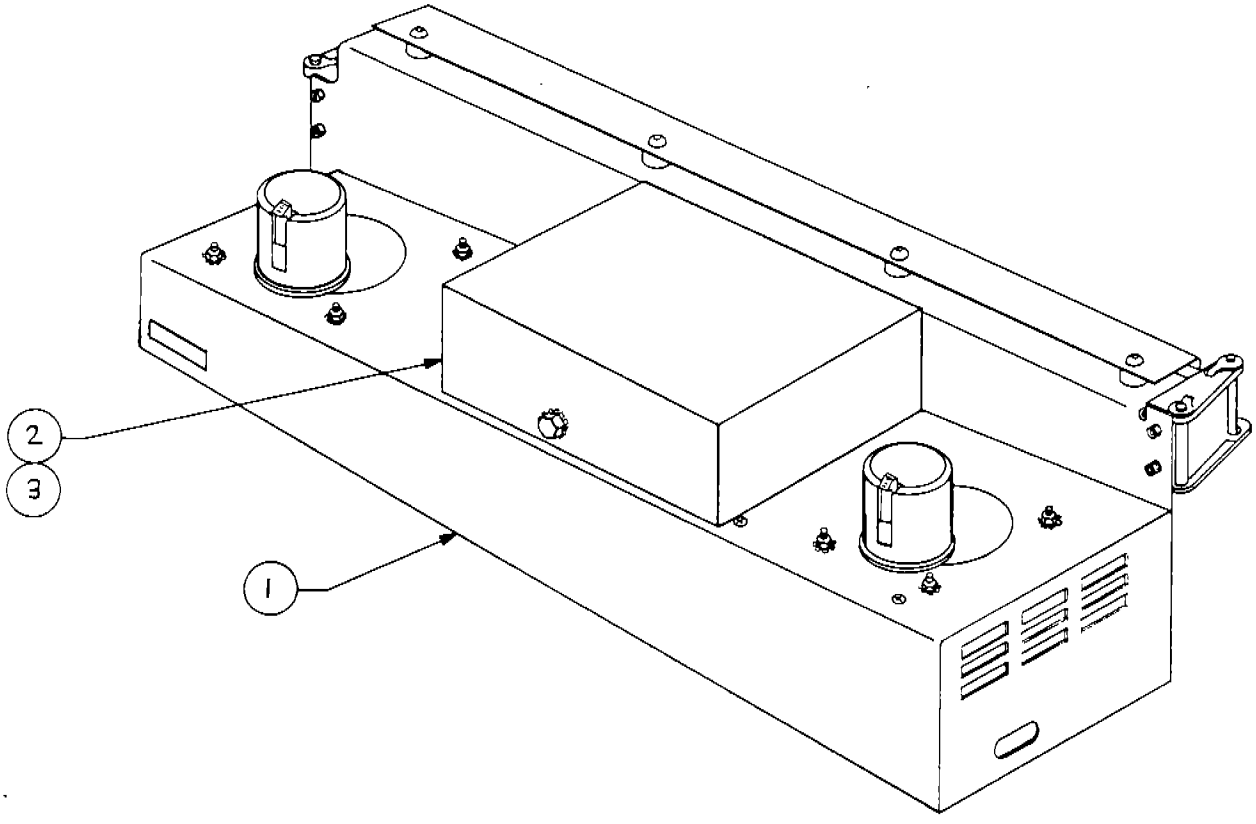

PRINTRONIX	
RIBBON DECK DRIVE ASSEMBLY	
DRAWING NO. 105035 REV G	SHEET NO. 1 of 1

5.0 ILLUSTRATED PARTS BREAKDOWN

5.7 P300 RIBBON DECK DRIVE SUB-ASSEMBLY
PART NUMBER 105530 REV F

ITEM NUMBER	DESCRIPTION	PART NUMBER
1	Housing, Ribbon Deck	102124-001
2	Hub, Drive Motor Ribbon Spool	102526-001
3	Assy, Ribbon Guide (Left)	106700-001
4	Assy, Ribbon Guide (Right)	106700-002
5	Deflector, Air Hammerbank	104660-001
6	N/A	
7	PCBA, Ribbon Control	102140-001
8	Tie Wrap	101480-002
9	Seal, Blower	101633-001
10	Blower Motor Assy	101624-001
11	Grommet	101548-003
12	Standoff, Hex	102176-002
13	Adhesive Loctite	101854-001
14	Assy, DC Motor	104678-001
15	Cable Assy, Ribbon Rev. Switch	102349-001
16	Screw, Pan HD Cruciform Drive	103677-009
17	Connector, Fast On Male	101539-001
18	Screw, Hex HD, Ind/Ext. TH L.W.	102786-404
19	Screw, Hex HD, Ind/Ext. TH L.W.	102786-604
20	Screw, Button HD. Socket	102288-001
21	N/A	
22	N/A	
23	Screw, Flat HD. 100° Phillips	102159-001
24	Screw, Cap. Soc. HD UNC	101514-046
25	Washer, Lock, External Tooth	101527-003
26	Spacer, Air Deflector	105030-001
27	Nut, Hex, Ext. TH L.W.	102789-100
28	Washer, Flat	101526-005
29	Washer, Flat	101526-002
30	Cable Tie, Push Mount	103294-002
31	N/A	
32	Tie Wrap	101480-001
33	Gasket, Vinyl	102250-002
34	Nut, Hex Ext. TH L.W.	102788-800
35	N/A	
36	N/A	

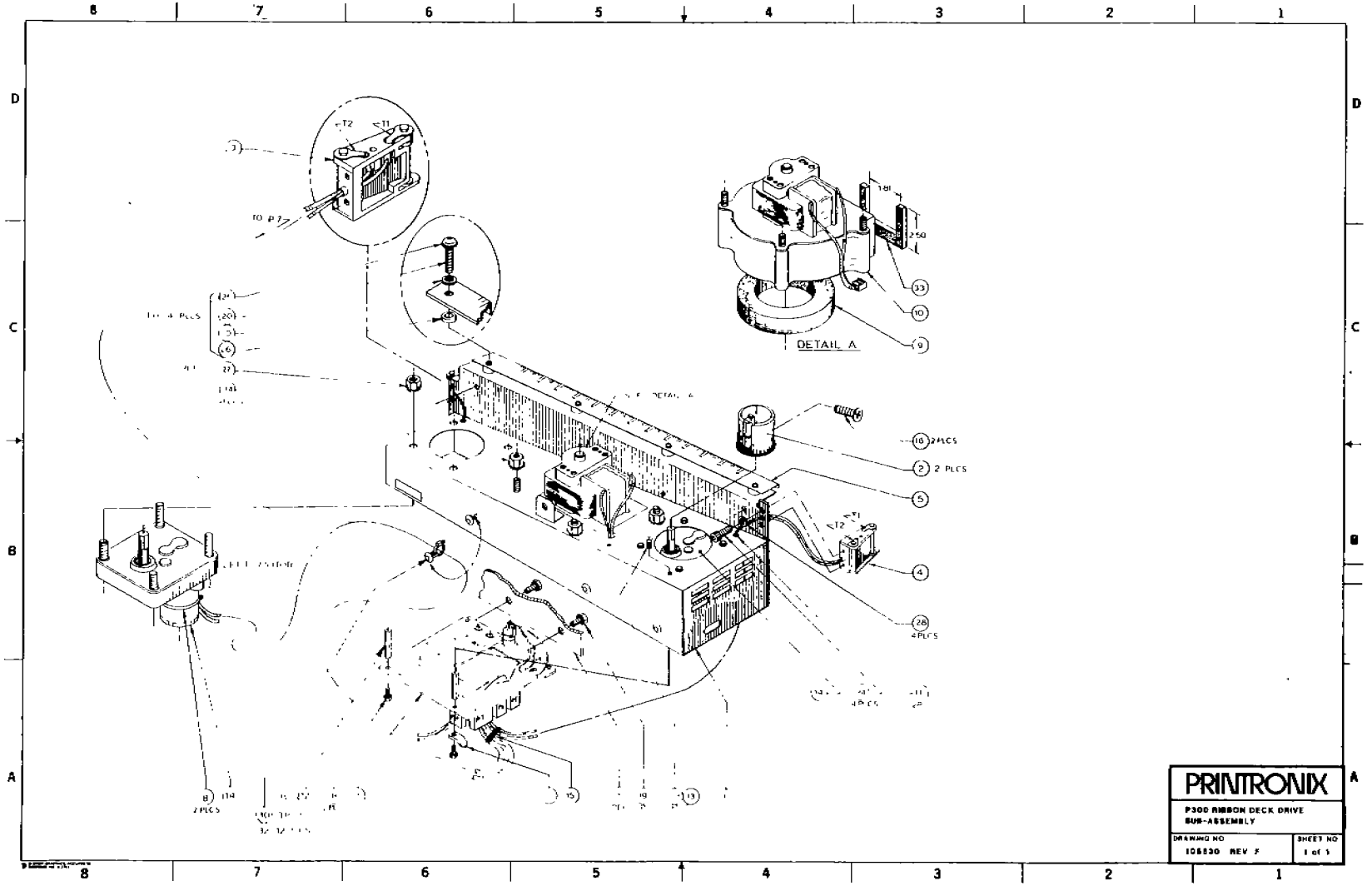
DETAIL A
2 PLCS
4PLCS
2PLCS
PRINTRONIX
P300 RIBBON DECK DRIVE
SUB-ASSEMBLY
DRAWING NO
SHEET NO
1 of 1

5.0 ILLUSTRATED PARTS BREAKDOWN

5.8 P300 RIBBON DECK DRIVE ASSEMBLY
PART NUMBER 105377 REV C

ITEM NUMBER	DESCRIPTION	PART NUMBER
1	Ribbon Deck Sub-Assy	105516-001
2	Cover, Fan	104686-001
3	Screw, Button HD Socket	102288-002
4	Washer, Lock, Internal Tooth	102518-001
5	Tape Foam Polyester Urethane	105414-001

5.0 ILLUSTRATED PARTS BREAKDOWN

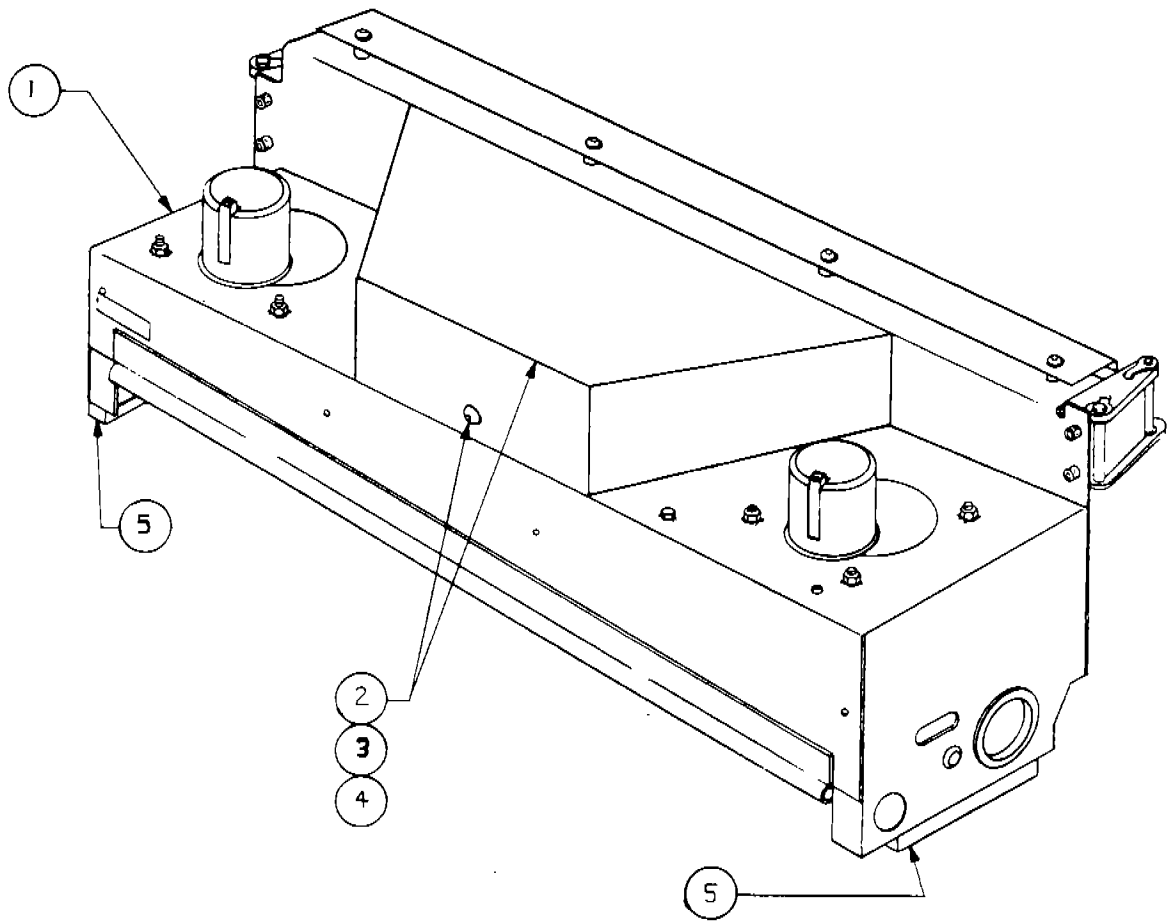

PRINTRONIX	
RIBBON DECK DRIVE ASSEMBLY	
DRAWING NO. 105377 REV C	SHEET NO. 1 of 1

5.0 ILLUSTRATED PARTS BREAKDOWN

5.9 P300 RIBBON DECK DRIVE SUB-ASSEMBLY
PART NUMBER 105516 REV M

ITEM NUMBER	DESCRIPTION	PART NUMBER
1	Housing, Ribbon Deck	104689-001
2	Hub, Drive Motor Ribbon Spool	102526-001
3	Assy, Ribbon Guide (Left)	106700-001
4	Assy, Ribbon Guide (Right)	106700-002
5	Deflector, Air Hammerbank	104660-001
6	Label, Tape	102901-002
7	PCBA, Ribbon Control	102140-001
8	Tie Wrap	101480-002
9	Tie Wrap	101480-001
10	Fan Assembly	105376-001
11	Grommet	101548-003
12	Standoff, Hex	102176-002
13	Tape, Foam	102250-002
14	Motor, DC Assy	104678-001
15	Cable Assy, Ribbon Reversing Switch	102349-001
16	Screw, Pan HD Cruciform Drive	103677-009
17	Connector, Fast On Male	101539-001
18	Screw, Hex HD. Ind/Ext TH L.W.	102786-404
19	Screw, Hex HD. Ind/Ext TH L.W.	102786-604
20	Screw, Button HD, Socket	102288-001
21	N/A	
22	Seal, Air, Ribbon Deck	105374-001
23	Adhesive, Cyanoacrylate	101537-006
24	Screw, Socket Head Cap. -UNC	101514-046
25	Washer, Lock External Tooth	101527-003
26	N/A	
27	Nut, Hex Ext. TH L.W.	102789-100
28	Washer, Flat	101526-005
29	Washer, Flat	101526-002
30	N/A	
31	Plug, Hole, Polyethylene	105417-001
32	Cable Assy, Fan Intcon, RBN Deck	105405-001
33	N/A	
34	N/A	
35	Spacer, Air Deflector	106937-001
36	Bracket, Support	106923-001
37	Nut, Hex W/Ext. Tooth L.W., UNC	102788-600
38	Des. Cable Tie, Push Mount	103294-001

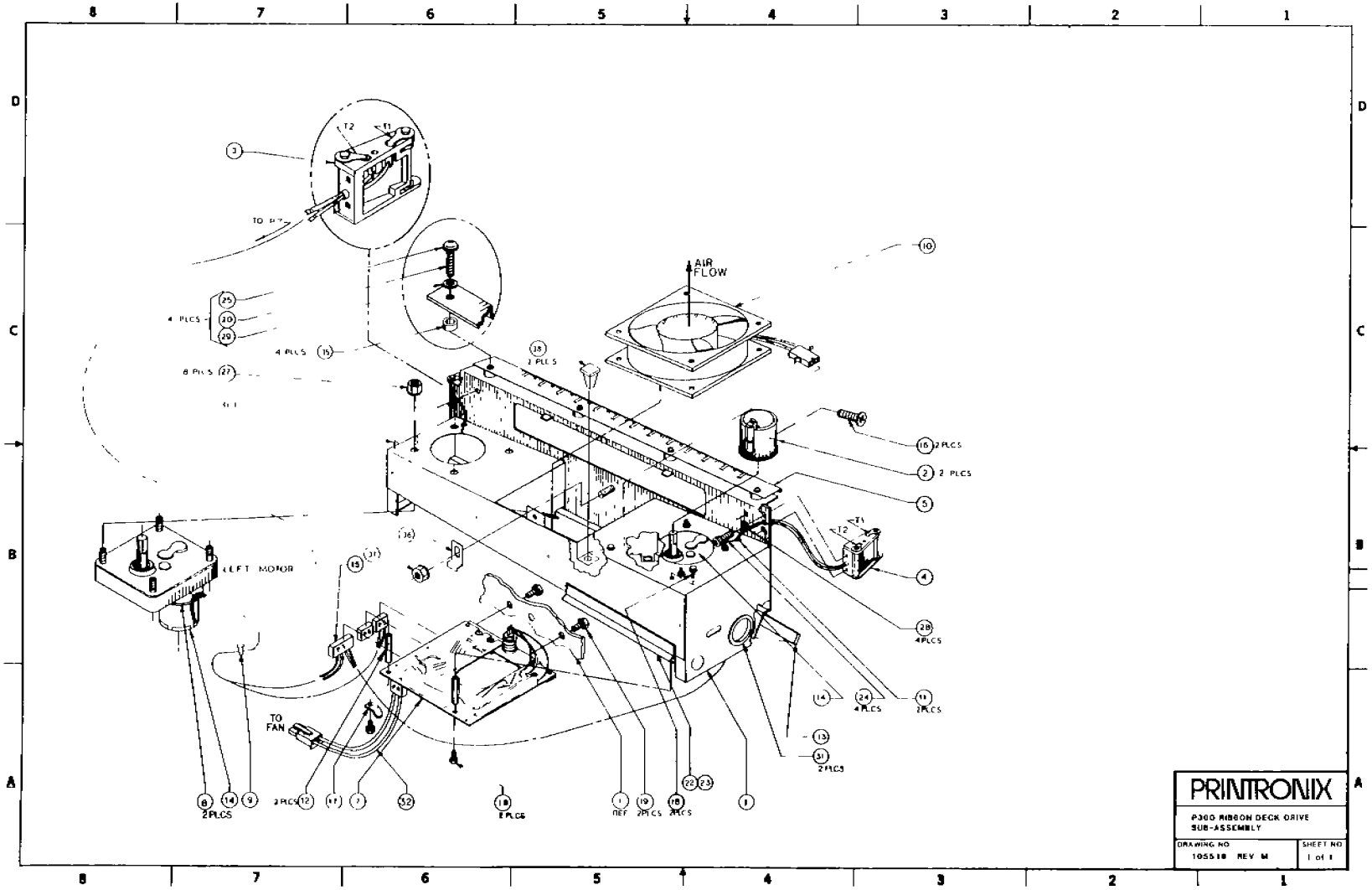
AIR FLOW
LEFT MOTOR
TO FAN
4 PLCS
8 PLCS
2 PLCS
4PLCS
2PLCS
REF
PRINTRONIX
P300 RIBBON DECK DRIVE SUB-ASSEMBLY
DRAWING NO
105518 REV M
SHEET NO
1 of 1

DRAWINGS

CONTENTS

General	6.1
Control Panel Assembly P/N 101578	6.2
Control Panel Schematic P/N 101766	
Hammer Driver PCBA P/N 101200	6.3
Hammer Driver Schematic P/N 101203	
Ribbon Control PCBA P/N 102140	6.4
Ribbon Control Schematic P/N 102143	
Power Supply PCBA P/N 105018	6.5
Power Supply Schematic P/N 105022	
Power Supply Schematic P/N 105430	
Logic A1 PCBA P/N 101685	6.6
Logic A1 Schematic P/N 101688	
Logic A4 PCBA P/N 103831	6.7
Logic A4 Schematic P/N 104044	
Logic A6 PCBA P/N 106599	6.8
Logic A6 Schematic P/N 106598	
Logic A7 PCBA P/N 107329	6.9
Logic A7 Schematic P/N 107330	
Logic B4 PCBA P/N 102360	6.10
Logic B4 Schematic P/N 102363	
Logic B7 PCBA P/N 103830	6.11
Logic B7 Schematic P/N 104118	
Logic B9 PCBA P/N 106594	6.12
Logic B9 Schematic P/N 106596	
Logic B10 PCBA P/N 107348	6.13
Logic B10 Schematic P/N 107349	

6.0 DRAWINGS

6.1 GENERAL

Section Six contains electrical schematics and their parts lists for all PCBAs and the control panel on the Printronix P300 printer. Use the contents of this section with Section Two, Theory of Operation, Section Three, Preventive and Corrective Maintenance, and Section Four, Troubleshooting Procedures.

6.0 DRAWINGS

6.2 CONTROL PANEL ASSEMBLY
PART NUMBER 101578 REV

REFERENCE DESIGNATOR	DESCRIPTION	PART NUMBER	QTY
	Panel, Control	101675-001	1
	Conn, 40 Pin	101330-001	1
	Switch, Control Panel	101487-001	5
	Switch, Control Panel	101487-004	1
	Lamp	101476-001	6
	Cable, Flat Ribbon, Rainbow	101477-003	9'
	Conn, Card Edge, Flat Ribbon	101330-002	1
	Wire, Stranded, 24 AWG	101486-001	28½
	Schematic, Control Panel	101766-001	REF
	Solder "44" Resin Core	101508-001	A/R
	Wrap, Tie	101480-001	2
	Holder, Cable Tie	101634-002	2

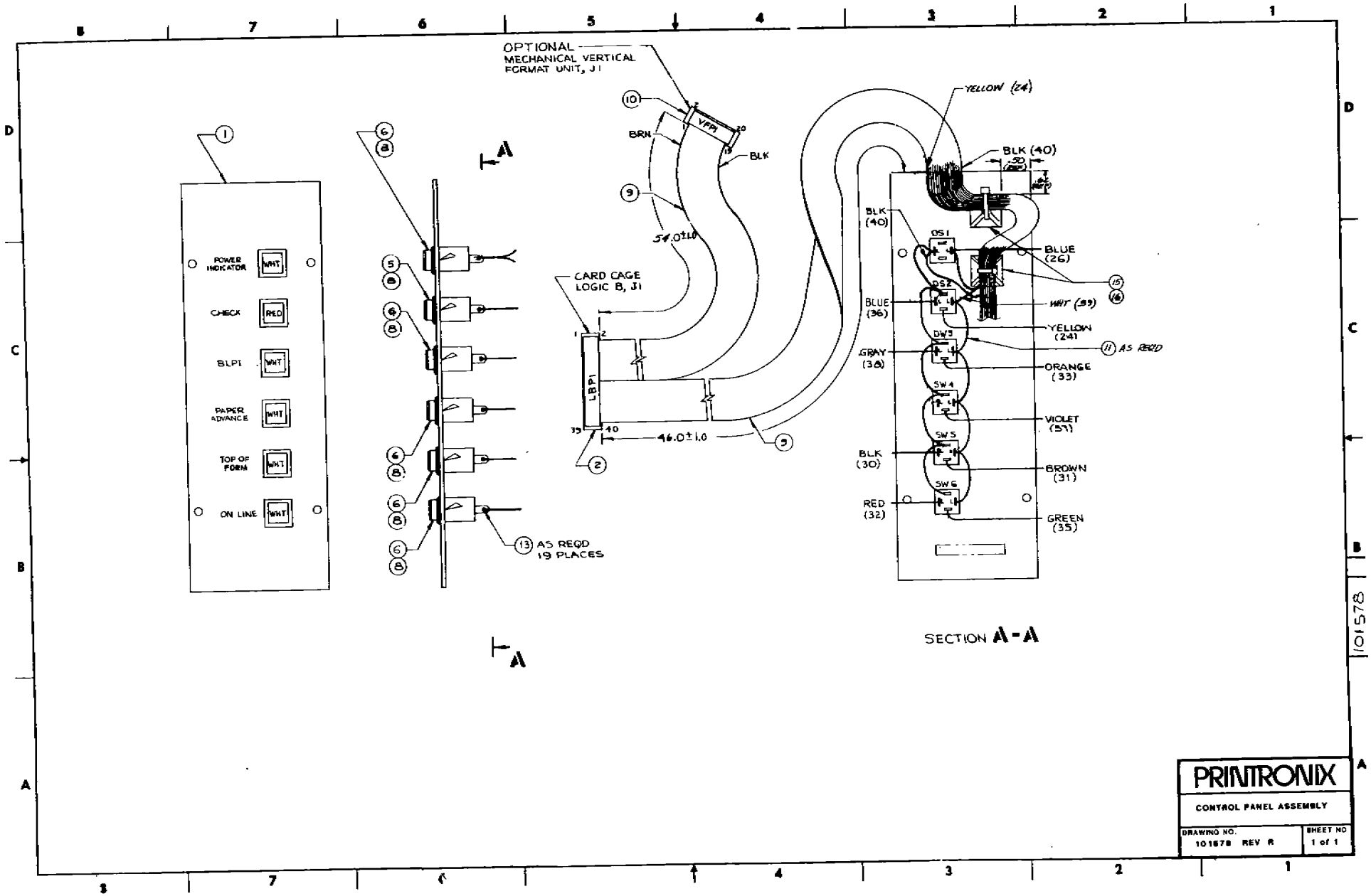
OPTIONAL
MECHANICAL VERTICAL
FORMAT UNIT, J1
VFPI
BRN
BLK
54.0±1.0
CARD CAGE
LOGIC B, J1
LBPI
46.0±1.0
POWER INDICATOR
WHT
CHECK
RED
BLPI
PAPER ADVANCE
TOP OF FORM
ON LINE
AS REQD
19 PLACES
YELLOW (24)
BLK (40)
BLUE (26)
BLUE (36)
WHT (39)
YELLOW (24)
AS REQD
GRAY (38)
ORANGE (33)
VIOLET (37)
BLK (30)
BROWN (31)
RED (32)
GREEN (35)
DS1
DS2
DW3
SW4
SW5
SW6
SECTION A-A
101578
PRINTRONIX
CONTROL PANEL ASSEMBLY
DRAWING NO.
101578 REV R
SHEET NO
1 of 1

6.0 DRAWINGS

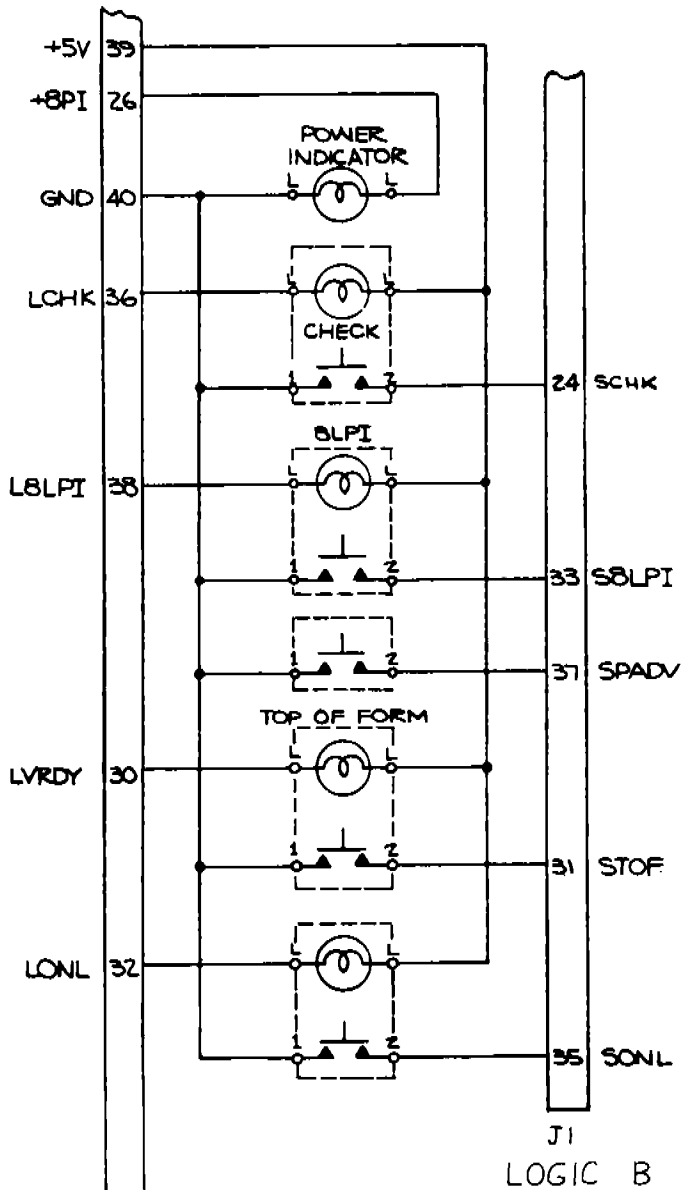

PRINTRONIX	
CONTROL PANEL SCHEMATIC	
DRAWING NO. 101766 REV D	SHEET NO. 1 of 1

6.0 DRAWINGS

6.3 HAMMER DRIVER PCBA
PART NUMBER 101200 REV AH

REFERENCE DESIGNATOR	DESCRIPTION	PART NUMBER	QTY
C1 C2	Capacitor, Tantalum, 15V, ± 20%, 3.3uf	101362-001	2
C3 C4	Capacitor, 220uf	101425-002	2
C5	Capacitor, 50V, 20%, .33uf	101764-001	1
CR1, CR6, CR11, CR16, CR21, CR26 CR31, CR36, CR41 CR46, CR51-66	Diode, Zener, UZ1585	102427-001	22
CR2-5, CR7-10, CR12-15, CR17-20, CR22-25, CR27-30, CR32-35, CR37-40, CR42-45, CR47--50, CR52-55	Diode, IN4004	101336-001	44
CR67	Diode IN5257B	101894-001	1
J4	Connector, Fast-On Male, .188	101426-001	1
J5 J6	Connector, Fast-On Male, 45°, .250	101539-001	2
J4-J6	Eyelet, Rolled Flange	103864-001	3
Q1-Q44	Transistor, Tip 121	101364-001	44
Q45	Transistor, 2N4234	101368-001	1
Q46	Transistor, 2N2906A	101366-001	1
R1, R3	Resistor, ¼W, 3.3K, 5%	101337-333	2
R4, R6	Resistor, ¼W, 1K, 5%	101337-103	2
R7	Resistor, ¼W, 120 ohm, 5%	101337-122	1
R8	Resistor, ¼W, 150 ohm, 5%	101337-152	1
U1, U3, U7, U9, U11 U14	I.C. 74164	101352-001	6
U2, U4-U6, U8, U10 U12, U13	I.C. 74174	101353-001	8
U15 (REF)	I.C. 7402	101339-001	1
U16	I.C. 74122	101350-001	1
N/A	Hammer Driver, PCB Drill & Blank	104276-001	1
N/A	Terminal, Turret	101380-001	3
N/A	Injector 25607	101382-001	2
N/A	PCBA Hammer Driver Schematic	101203-000	REF
N/A	Pin, Roll	101319-010	2

6.0 DRAWINGS

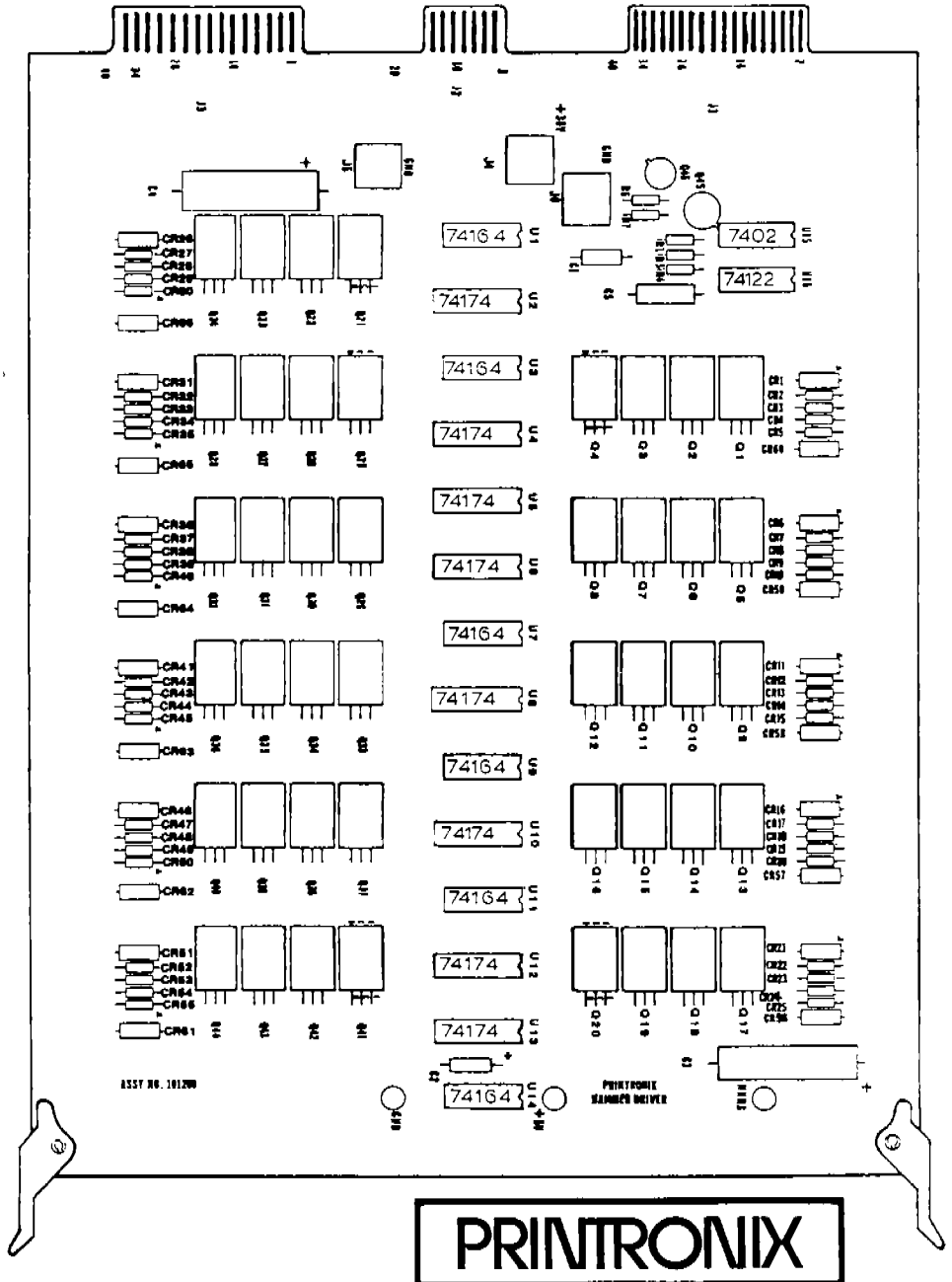

PRINTRONIX	
HAMMER DRIVER PCBA	
DRAWING NO. 101200 REV AH	SHEET NO. 1 of 1

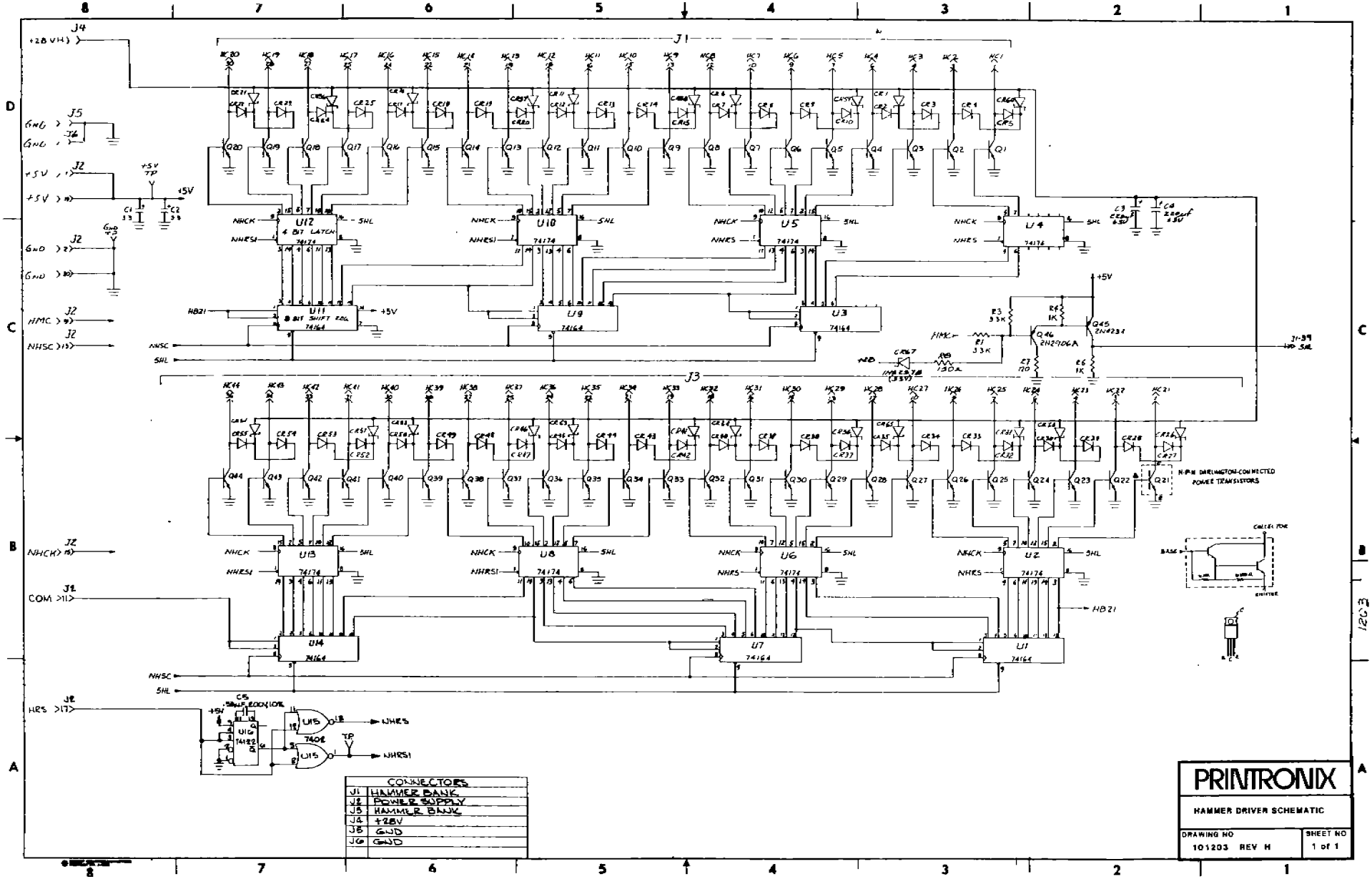
J1
J3
J4
+28 VH
J5
GND
J6
GND
J2
+5V
+5V
GND
GND
HMC
NHSC
NHCK
COM
HRS
U12
4 BIT LATCH
74174
U11
8 BIT SHIFT REG
74164
U10
U9
U5
U3
U4
U13
U14
U8
U7
U6
U2
U1
U16
74122
U15
7402
NHCK
NHRS1
NHRS
SHL
HB21
NHSC
NHRS
+5V
TP
C1
C2
C3
C4
C5
R1
R3
R4
R5
R6
R7
R8
Q46
2N2906A
Q45
2N4234
CR67
N-P-N DARLINGTON-CONNECTED POWER TRANSISTORS
COLLECTOR
BASE
EMITTER
CONNECTORS
J1 HAMMER BANK
J2 POWER SUPPLY
J3 HAMMER BANK
J4 +28V
J5 GND
J6 GND
PRINTRONIX
HAMMER DRIVER SCHEMATIC
DRAWING NO
101203 REV H
SHEET NO
1 of 1

6.0 DRAWINGS

6.4 RIBBON CONTROL PCBA
PART NUMBER 102140 REV V

REFERENCE DESIGNATOR	DESCRIPTION	PART NUMBER	QTY
J1, J2 J4-J6	Connector, Male Molex, 3 Pin	101332-002	5
J3, J7	Connector, Male Molex, 5 Pin	101332-001	2
N/A	Heatsink, PCB Ribbon Control	102138-001	1
2-56 X .31	Screw, Pan Head, Phillips	101513-012	2
4-40 X .25	Screw, Hex Head, Indented/ External Tooth, Lock Washer	102786-404	2
Q1, Q2	Washer, Nylon Shoulder #4	101518-002	2
Q1, Q2	Insulator, Transistor, Tip 121	101650-001	2
N/A	Washer, Flat #4	101526-009	2
CR1-CR7	Diode, IN4004	101336-001	7
Q5, Q6	Transistor, 2N2219A	101365-001	2
Q8, Q9	Transistor, 2N2906A	101366-001	2
Q1, Q2	Insulator, Transistor Tip 121	101364-001	2
Q3, Q4	Transistor, 2N4393	102230-001	2
Z3	I.C., 7406	102316-001	1
Z2	SCR Photo Opto Isolator	101333-001	1
Z1	I.C., LM324	102231-001	1
Q7	Triac, 15 Amps	102120-001	1
CR8	Diode, Zener 1N4750	102232-001	1
C1, C2, C5	Capacitor, 15V, 20%, 3.3uf	101362-001	3
C3, C4, C10	Capacitor, 50V, 20%, 1uf	102233-001	3
Q5, Q6	Transistor Mounting Pads	101695-001	2
C7	Capacitor, 400V, 20% .1uf	101723-001	1
R15	Resistor, Wirewound	103384-004	1
R31	Resistor, ½W, 22 ohm, 5%	101422-221	1
R14	Resistor, 10W, 25 ohm, 5%	102235-001	1
R30	Resistor, 1W, 560 ohm, 5%	101400-562	1
R7, R8, R18	Resistor, ¼W, 100K, 5%	101337-105	3
R24, R26	Resistor, ¼W, 10K, 5%	101337-104	2
R17	Resistor, ¼W, 15K, 5%	101337-154	1
R9, R10, R20	Resistor, ¼W, 47 ohm, 5%	101337-471	3
R11, R12	Resistor, ¼W, 470 ohm, 5%	101337-472	2
R3, R4, R28	Resistor, ¼W, 1K, 5%	101337-103	3
R1, R2	Resistor, ¼W, 100 ohm, 5%	101337-102	2
R25, R27	Resistor, ¼W, 82K, 5%	101337-824	2
R13	Resistor, ¼W, 47K, 5%	101337-474	1
R32	Resistor, ¼W, 33K, 5%	101337-334	1
R33, R34	Resistor, 1/8W, 100K, 5%	101399-105	2
R29	Resistor, ¼W, 330K, 5%	101337-335	1

6.0 DRAWINGS

6.4 RIBBON CONTROL PCBA (Continued)
PART NUMBER 102140 REV V

REFERENCE DESIGNATOR	DESCRIPTION	PART NUMBER	QTY
R22,R23	Resistor, 1/8W, 10K, 5%	101399-104	2
R5,R6	Resistor, 1/8W, 29.4K, 1%	101399-294	2
R21	Resistor, ¼W, 330 ohm, 5%	101337-332	1
GATE, MT1,MT2	Wire Standard 18GA	101479-007	A/R
R14,R14			
R19	Resistor, ¼W, 82 ohm, 5%	101337-821	1
C6,C11,C12	Capacitor, .01mf, 20%	102335-001	3
G +5 +28	Terminal Turret	101380-001	3
R16	Resistor, ¼W, 2.7K, 5%	101337-273	1
4-40 X .31	Screw, Nylon, Binder Head	102953-002	2
¼ - 28	Nut, Plain Hex	103714-004	1
¼	Washer, Lock External Tooth	101527-006	1
¼	Washer, Flat	101526-012	1
N/A	Teflon Tubing	101621-003	A/R
R33,R34	(-2 only) Resistor, 1/8W, 113K, 1%	101399-114	2
R70	Resistor, ¼W, 33.2K, 1%	101399-333	1
R26	Resistor, 1/8W, 5.62K, 1%	101399-563	1
R38	Resistor, 1/8W, 82.5K, 1%	101399-825	1
R25	Resistor, ¼W, 909 ohm, 1%	101399-909	1
R17	Resistor, 1W, 1.2K, 5%	101400-123	1
R60	Resistor, 1W, 150 ohm, 5%	101400-152	1
R3	Resistor, ±W, 33 ohm, 5%	101422-331	1
R1	Resistor, 3W, 10 ohm, 5%	103348-002	1

6.0 DRAWINGS

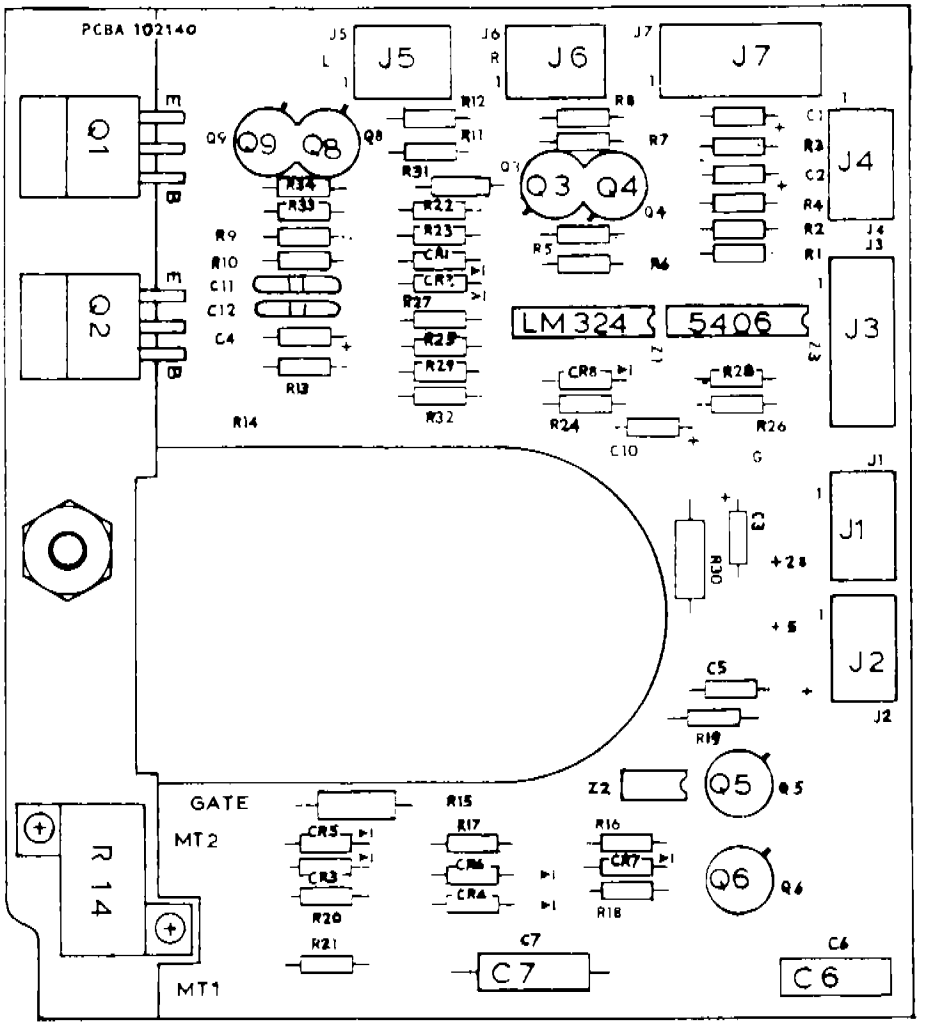

PRINTRONIX	
RIBBON CONTROL PCBA	
DRAWING NO. 102140 REV V	SHEET NO. 1 of 1

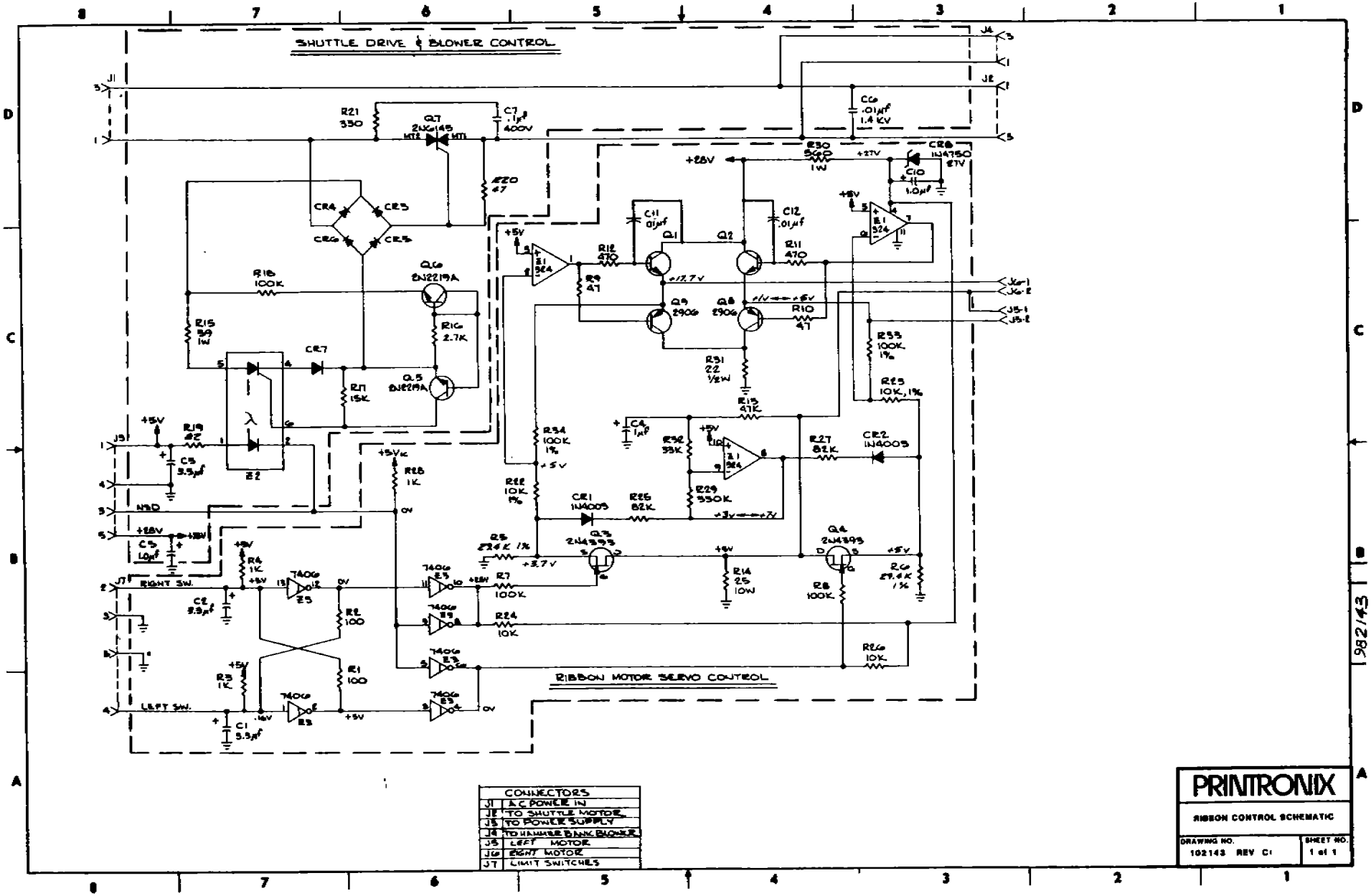

CONNECTORS	
J1	A.C. POWER IN
J2	TO SHUTTLE MOTOR
J3	TO POWER SUPPLY
J4	TO HAMMER BANK BLOWER
J5	LEFT MOTOR
J6	RIGHT MOTOR
J7	LIMIT SWITCHES

PRINTRONIX

RIBBON CONTROL SCHEMATIC

DRAWING NO. 102143 REV C1

SHEET NO. 1 of 1

102143

6.0 DRAWING

6.5 POWER SUPPLY PCBA
PART NUMBER 105018 REV S

REFERENCE DESIGNATOR	DESCRIPTION	PART NUMBER	QTY
N/A	Heat Sink	104711-001	1
N/A	Mounting Kit DO 5	103199-001	1
C5,C6,C13,C17 C19,C20,C21	Capacitor, 15V, 20% 3.3uf	101362-001	6
C10,C11	Capacitor, 15V, 10%, .22uf	101362-003	2
C9,C15	Capacitor, 15V, 20%, 22uf	101362-005	2
C23	Capacitor, 200V, 20% .0022uf	101884-001	1
C3,C7	Capacitor, Metalized Film, 50/100V, 22uf	101764-002	2
C12, C24	Capacitor, 100V, 10%, .1uf	102291-105	2
C22	Capacitor, Ceramic, 10%, 220uf	102291-222	1
C14	Capacitor, Ceramic, 10%, .022uf	102291-223	1
C16	Capacitor, 100V, 10%, .0068uf	101363-003	1
R14,R31	Resistor, 1/4W, 100 ohm, 5%	101337-102	2
R9,R15,R16,R18 R21,R22,R23,R28 R29,R32-36,R46 R47,R51,R53,R68 R39,R69,R76	Resistor, 1/4W, 1K, 5%	101337-103	19
R24	Resistor, 1/4W, 100K, 5%	101337-105	1
R80	Resistor, 1/4W, 12K, 5%	101337-124	1
R74	Resistor, 1/4W, 120K, 5%	101337-125	1
R42	Resistor, 1/4W, 150 ohm, 5%	101337-152	1
R37,R50,R63	Resistor, 1/4W, 180 ohm, 5%	101337-182	3
R54	Resistor, 1/4W, 18K, 5%	101337-184	1
R11,R52	Resistor, 1/4W, 22K, 5%	101337-224	2
R57	Resistor, 1/4W, 240 ohm, 5%	101337-242	1
R40	Resistor, 1/4W, 3.3K, 5%	101337-333	1
R81	Resistor, 1/4W, 33K, 5%	101337-334	1
R45	Resistor, 1/4W, 39K, 5%	101337-394	1
R10,R61,R62	Resistor, 1/4W, 470 ohm, 5%	101337-472	4
R13,R67,R78,R79,R82	Resistor, 1/4W, 47K, 5%	101337-474	4
R30	Resistor, 1/4W, 560 ohm, 5%	101337-562	1
R19,R20,R49,R75	Resistor, 1/4W, 5.6K, 5%	101337-563	4
R73,R77	Resistor, 1/4W, 8.2K, 5%	101337-823	2
R64,R65	Resistor, 50W, 30 ohm, 3%	101396-301	2
R4,R5,R48	Resistor, 5W, 1K, 10%	101398-103	3

6.0 DRAWING (Continued)

6.5 POWER SUPPLY PCBA
PART NUMBER 105018 REV S

REFERENCE DESIGNATOR	DESCRIPTION	PART NUMBER	QTY
R71,R72	Resistor, 1/8W, 1K, 1%	101339-103	2
R2	Resistor, 1/8W, 10K, 1%	101399-104	1
R41	Resistor, 1/8W, 182 ohm, 1%	101399-182	1
R70	Resistor 33.2K 1/4/W 1%	101399-333	1
R26	Resistor 5.62K 1/8W 1%	101399-563	1
R38	Resistor 82.5K 1/8W 1%	101399-825	1
R25	Resistor 909 1/4W 1%	101399-909	1
R17	Resistor 1.2K 1W 5%	101400-123	1
R60	Resistor 150 1W 5%	101400-152	1
R3	Resistor 33 1/2 W 5%	101422-331	1
R1	Resistor 10 3W 5%	103348-002	1
R27, R58	Resistor, Selected Value	N/A	2
R56	Resistor, Selected Value	N/A	3
CR9	Diode, 1N4004	101336-001	1
SCR1	MCR 649AP-3	101391-001	1
CR15,CR16,CR17	LED 5082-4684	101593-001	3
CR8	Diode, IN5257B (33V)	101894-001	1
CR4, CR7	Diode, 3052	102130-001	2
CR2	Diode, Zener 6.2V 1N4554B	102149-001	1
CR21-CR24	Diode, 1N914	102872-001	4
F2,F3	Fuse, 3 amps, Fast Blow	101386-030	2
F1	Fuse, 8 amps, Fast Blow	101386-080	1
U1	I. C. LM339	101358-001	1
U6	I. C. 78L02AC	101878-001	1
U3	I. C. LM567	102311-001	1
U2	I. C. 7406	101341-001	1
U4, U5	I. C. LM358AN	102871-001	2
Q1,Q2,Q4,Q6	Transistor, Tip 121	101364-001	4
Q5,Q7, Q11,Q20,Q21	Transistor, 2N2219A	101365-001	5
Q8-Q10,Q18,Q19	Transistor, 2N2906A	101366-001	5
Q3	Transistor, 2N4234	101368-001	1
Q16	Transistor, Tip 32A	101750-001	1
Q12	Transistor, 2N4399	102004-001	1
Q13	Transistor, MPSA14	102981-001	1
J8	Connector, Male, P. C.	101332-003	1

6.0 DRAWING (Continued)

6.5 POWER SUPPLY PCBA
PART NUMBER 105018 REV S

REFERENCE DESIGNATOR	DESCRIPTION	PART NUMBER	QTY
J3-J5	Connector, Male, P. C.	101332-001	3
J1	Connector, Male, P. C.	101332-004	1
J7,J17	Connector, Fast On Male .188	101426-001	2
J16,J18	Connector, Fast On Male .250	101539-001	2
J6,J9-J13	Connector, Fast On Male .250	102659-001	6
J6,J7,J9-J13 J16-J18	Eyelet, Rolled Flange	103864-001	10
F1-F3	Clip Fuse	101390-001	6
Q1,Q2,Q4,Q6,Q16	Insulator, Transistor to -220AB	101650-001	5
SCR1, Q12	Insulator	102956-001	2
SCR1, Q12	Nut, Plain Hex 4 x 40 Heat Sink	101525-004	6
Q1,Q2,Q4,Q6,Q16	Nut, Hex, Nylon	102952-002	5
SCR1,Q12,R64,R65	Screw, Pan HD Phil 4-40 x .50	101513-021	8
Heat Sink	Screw, Hex HD Ind/Ext TH L.W.	102786-406	2
Q1,Q2,Q4,Q6,Q16	Screw, Binder Head, Nylon 6-32	102953-003	5
SCR1,Q12	Washer, Flat #4 Heat Sink	101526-005	6
SCR1,Q12,R64,R65	Washer, Lock #4 Heat Sink	101527-001	10
Q1,Q2,Q4,Q6,Q16	Washer, Insulating	102409-003	5
GND +28V +5V	Terminals, Turret VREF MPU PMD	101380-001	6
W1-W5	Jumper, Wire Stranded 18 Awg Black	101479-007	A/R
SCR1,Q1,Q2,Q4 Q6,Q12,Q16	Grease, Silicone	101615-002	A/R
N/A	Schematic Power Supply	105022-000	REF
N/A	Wire, Solid 24 AWG	101620-001	A/R
Q3,Q5,Q7,Q11,Q20 Q21 (Ref)	Pad, Mounting Transistor To-5	101695-001	6
N/A	Solder Ring	105089-001	10

6.0 DRAWINGS

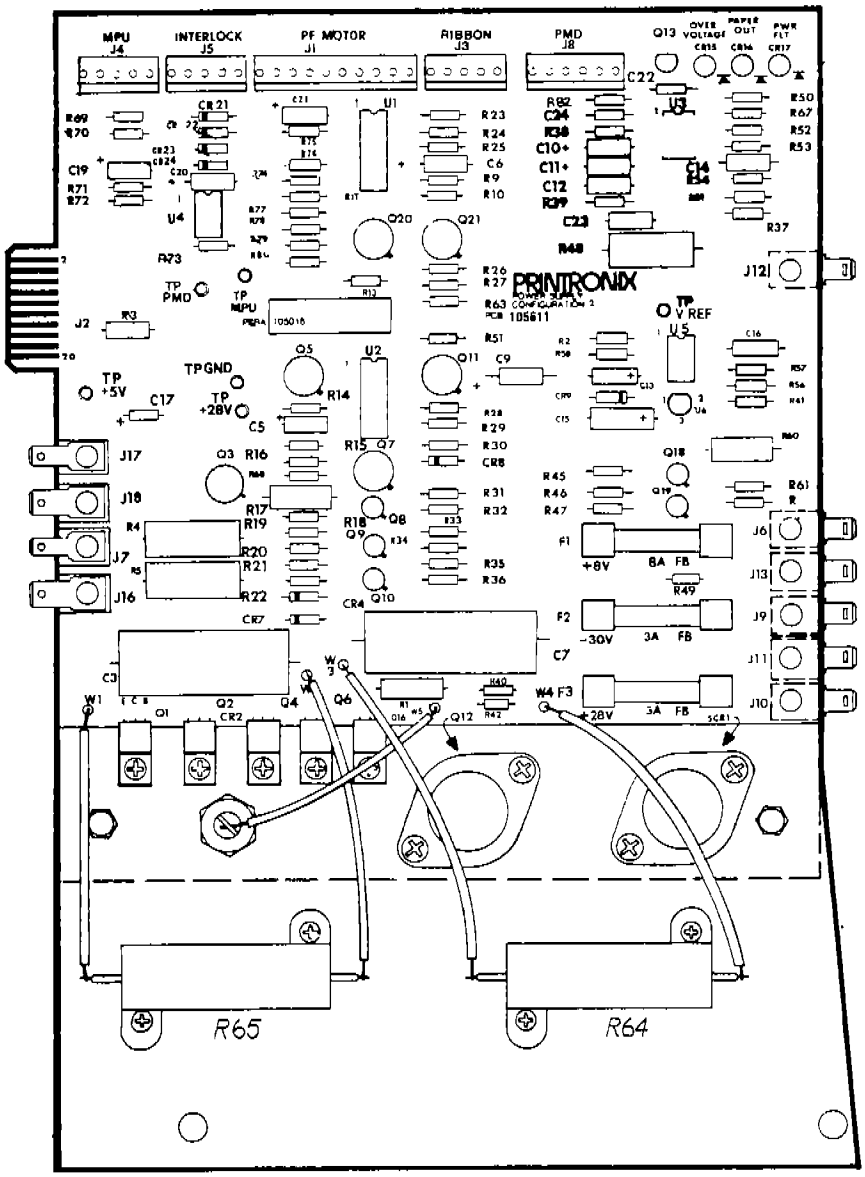

PRINTRONIX	
POWER SUPPLY PCBA	
DRAWING NO. 105018 REV AL	SHEET NO. 1 of 1

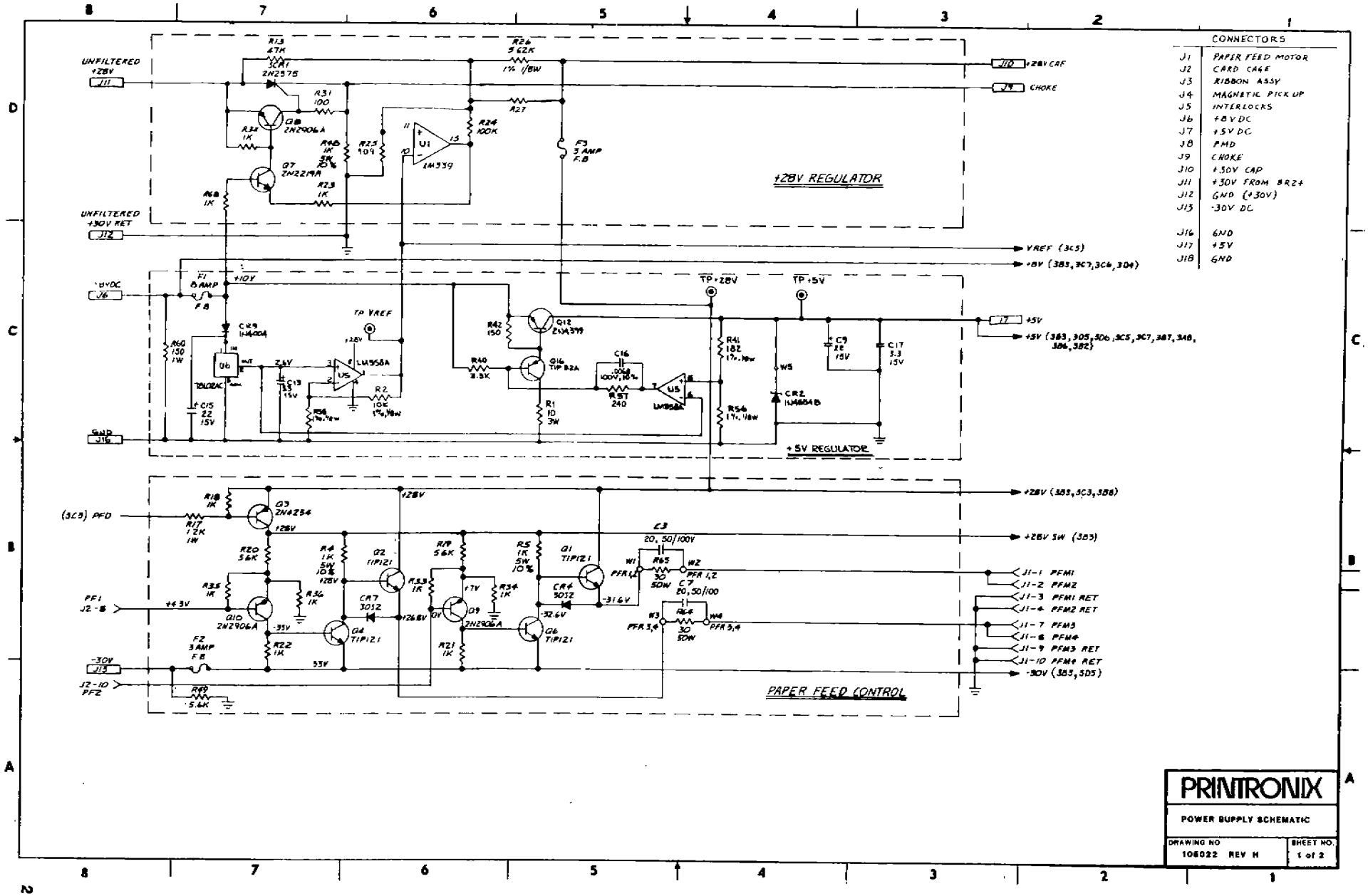

CONNECTORS

J1	PAPER FEED MOTOR
J2	CARD CAGE
J3	RIBBON ASSY
J4	MAGNETIC PICK UP
J5	INTERLOCKS
J6	+8V DC
J7	+5V DC
J8	PMD
J9	CHOKE
J10	+30V CAP
J11	+30V FROM BR2+
J12	GND (+30V)
J13	-30V DC
J16	GND
J17	+5V
J18	GND

PRINTRONIX

POWER SUPPLY SCHEMATIC

DRAWING NO	SHEET NO.
106022 REV H	1 of 2

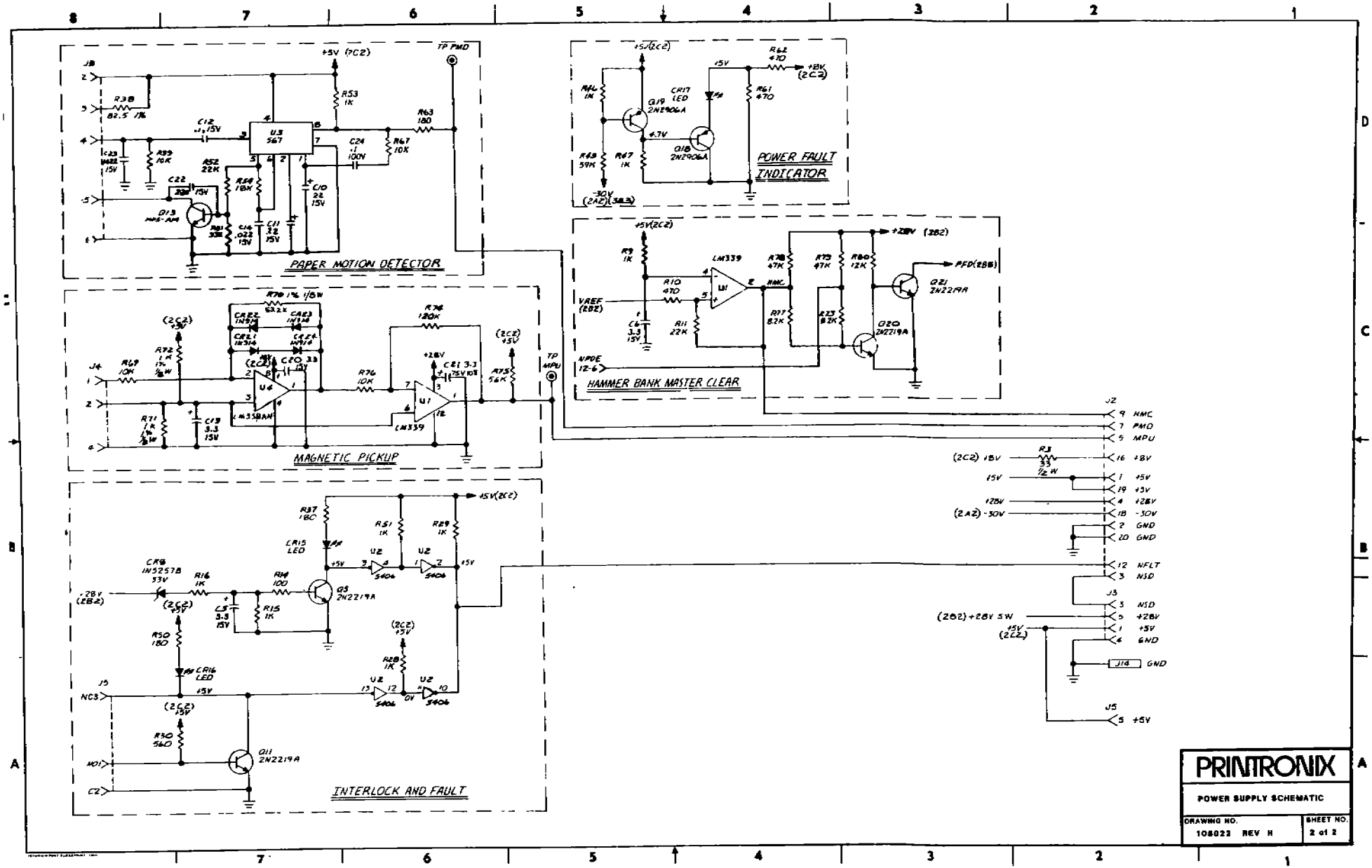
PAPER MOTION DETECTOR
POWER FAULT INDICATOR
HAMMER BANK MASTER CLEAR
MAGNETIC PICKUP
INTERLOCK AND FAULT
PRINTRONIX
POWER SUPPLY SCHEMATIC
DRAWING NO. 108022 REV H
SHEET NO. 2 of 2

SPARE CIRCUITS			I.C GND AND VOLTAGE INFO.			CONNECTORS	
TYPE	LOCATION	OUTPUT PIN	TYPE	GND PIN	+5V PIN	J1	PAPER FEED MOTOR
LM339	U1	13, 14	567	7	4	J2	CARD CAGE
LM358N	U4	7	78L02AC	3	1	J3	RIBBON ASSY
			LM339	12	3	J4	MAGNETIC PICKUP
						J5	INTERLOCKS
						J6	+9 V DC
						J7	+5 V DC
						J8	PMD
						J10	+30V CAP
						J13	-30V DC
						J16	GND
						J17	+5V
						J18	GND

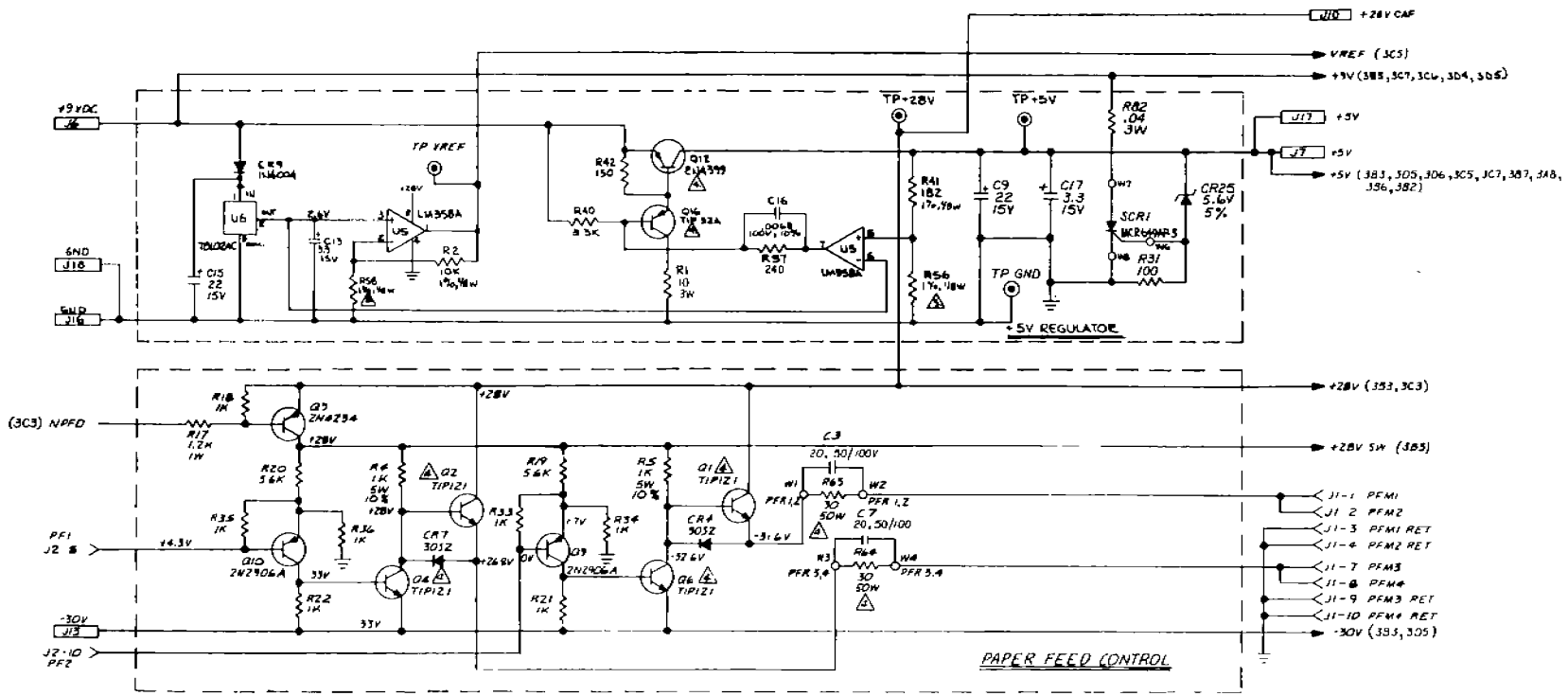

PRINTRONIX

POWER SUPPLY SCHEMATIC

DRAWING NO	SHEET NO
105430 REV J	1 of 2

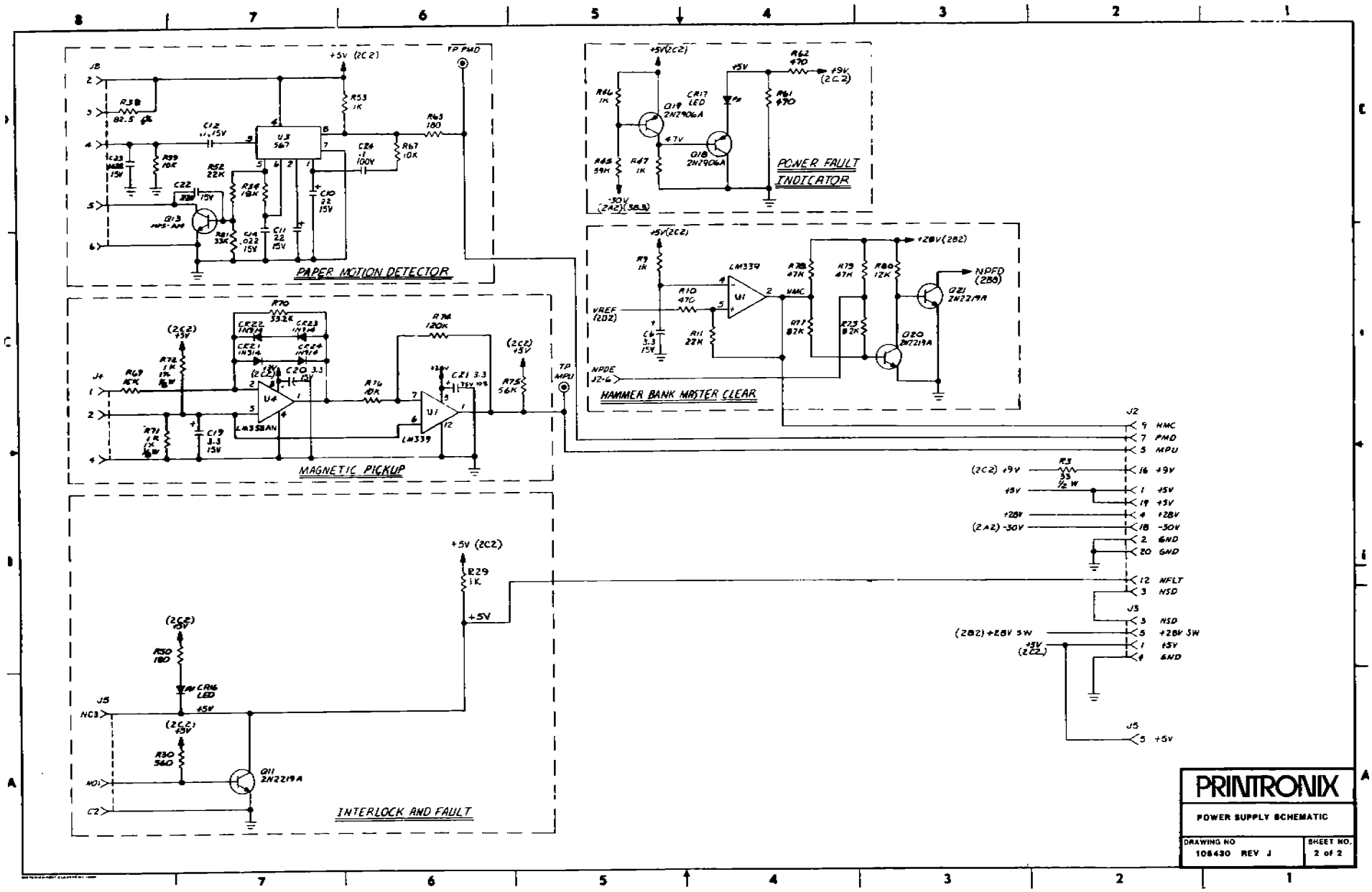
PAPER MOTION DETECTOR
POWER FAULT INDICATOR
HAMMER BANK MASTER CLEAR
MAGNETIC PICKUP
INTERLOCK AND FAULT
PRINTRONIX
POWER SUPPLY SCHEMATIC
DRAWING NO 106430 REV J
SHEET NO. 2 of 2

6.0 DRAWINGS

6.6 LOGIC A1 PCBA
PART NUMBER 101685 REV AH

REFERENCE DESIGNATOR	DESCRIPTION	PART NUMBER	QTY
C1-C9	Capacitor, 15V, ± 20%, 3.3uf	101362-001	9
C10	Capacitor, Tantalum, 15V, ± 20%, 22uf	101362-005	1
C11	Capacitor, 200V, ± 20%, .01uf	101363-001	1
C12	Capacitor, 50V, ± 20%, 1uf	102233-001	1
CR1	Diode IN5349B, 12V 5W	101371-001	1
CR2	Diode IN4004	101336-001	1
R1, R2	Resistor, ¼W, 1K, 5%	101337-103	2
R3	Resistor, ¼W, 10K, 5%	101337-104	1
R4, R5, R7	Resistor, ¼W, 470 ohm, 5%	101337-472	3
R6	Resistor, 5W, 120 ohm, 10%	101398-122	1
R8	Resistor, ¼W, 100 ohm, 5%	101337-102	1
1A, 4A	I.C. 7414	101343-001	2
2A, 3A, 9A, 8K	I.C. Socket 14 Pin	101384-001	4
5A	I.C. 7406	101341-001	1
7A, 10B, 10F, 5K	I.C. 74107	101349-001	4
9A, 3A, 3K	I.C. Resistor Network, 1K	101381-102	3
11A, 8B, 11C, 4D, 5D, 6D, 3F, 6F, 3H 4H	I.C. 7402	101339-001	10
2B, 3B, 4B, 5B, 11E	I.C. 7486	101348-001	5
6B, 9B, 9C, 9D, 10D, 3E, 6E, 5F, 6H, 11F, 11H	I.C. 7400	101338-001	11
7B, 10C, 3D, 9F, 7H, 4K, 9H	I.C. 7404	101340-001	7
11B, 8C	I.C. 74193	101354-001	2
3C, 4C	I.C. 74174	101353-001	2
5C-7C	I.C. 7442	101345-001	3
1D, 2D, 1K, 2K, 1H, 2H, 1F, 2F, 1E, 2E	I.C. Socket 16 Pin	101385-001	10
7D, 7E	I.C. 7420	101344-001	2
8D, 11D, 5E, 7F, 8H	I.C. 7410	101342-001	6
4E, 4F	I.C. 74LS151	102301-001	2
8E-10E, 6K	I.C. 74LS107	102302-001	4
8F, 7K	I.C. 74393	101355-001	2
1CA, 1CB, 2CA, 2CB, 1BA	I.C. TMS3129	101357-001	5

6.0 DRAWINGS

6.6 LOGIC A1 PCBA (Continued)
PART NUMBER 101685 REV AH

REFERENCE DESIGNATOR	DESCRIPTION	PART NUMBER	QTY
GND +5 -12V	Turret, Terminal	101380-001	4
Data Strobe			
N/A	PCB Logic A1	104718-001	1
N/A	Pin, Roll	101319-010	2
N/A	Injector/Ejector 25602 (S209)	101382-001	2
1K, 2K, 1H, 2H, 1F 2F, 1E, 2E, 1D, 2D	Socket, I.C. 15 Pin	101384-005	N/A
2A, 3A, 8K, 9A	Socket, I.C. 14 Pin	101384-001	N/A

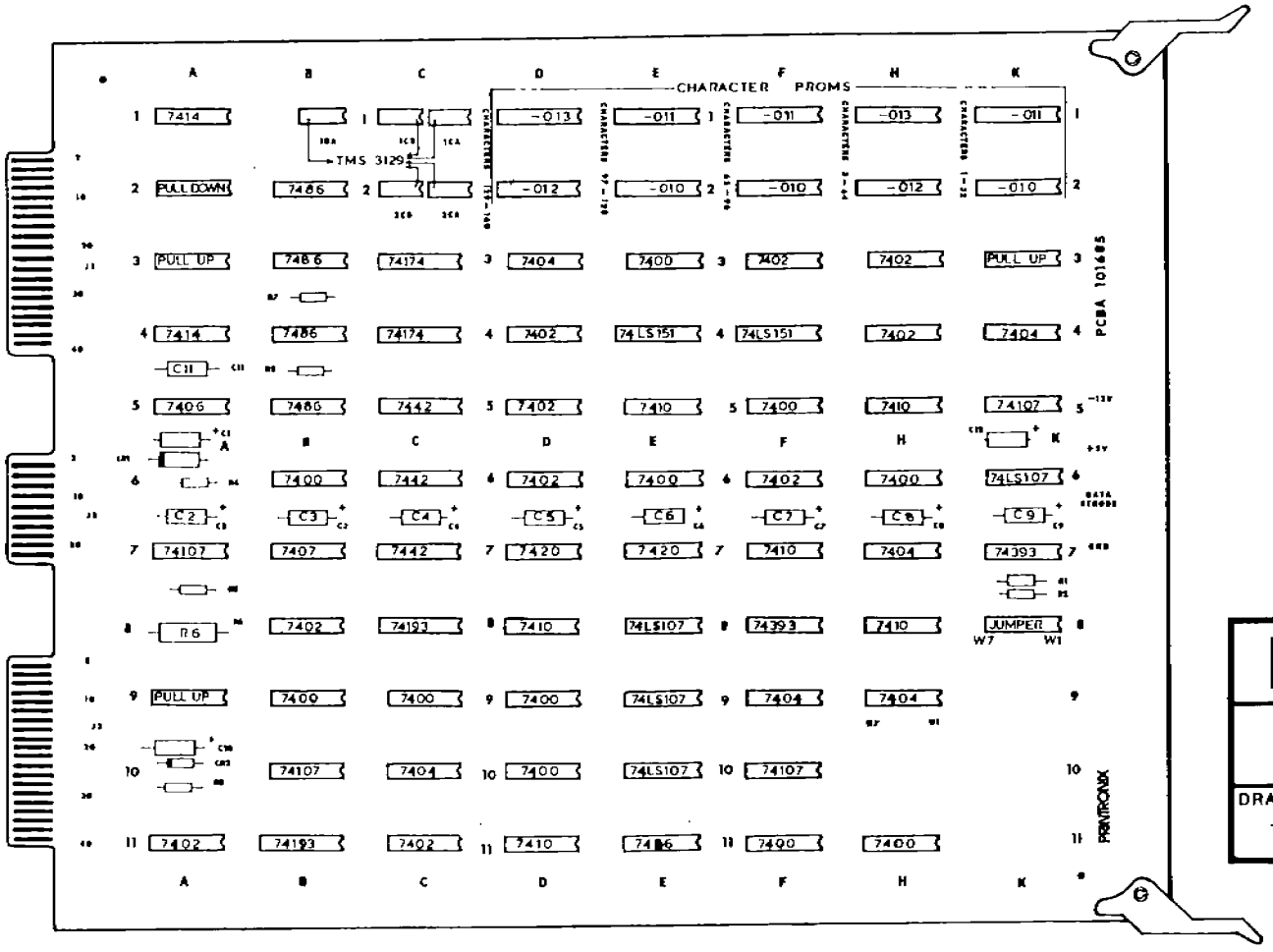

PRINTRONIX	
LOGIC A1 PCBA	
DRAWING NO. 101685 REV AH	SHEET NO. 1 of 1

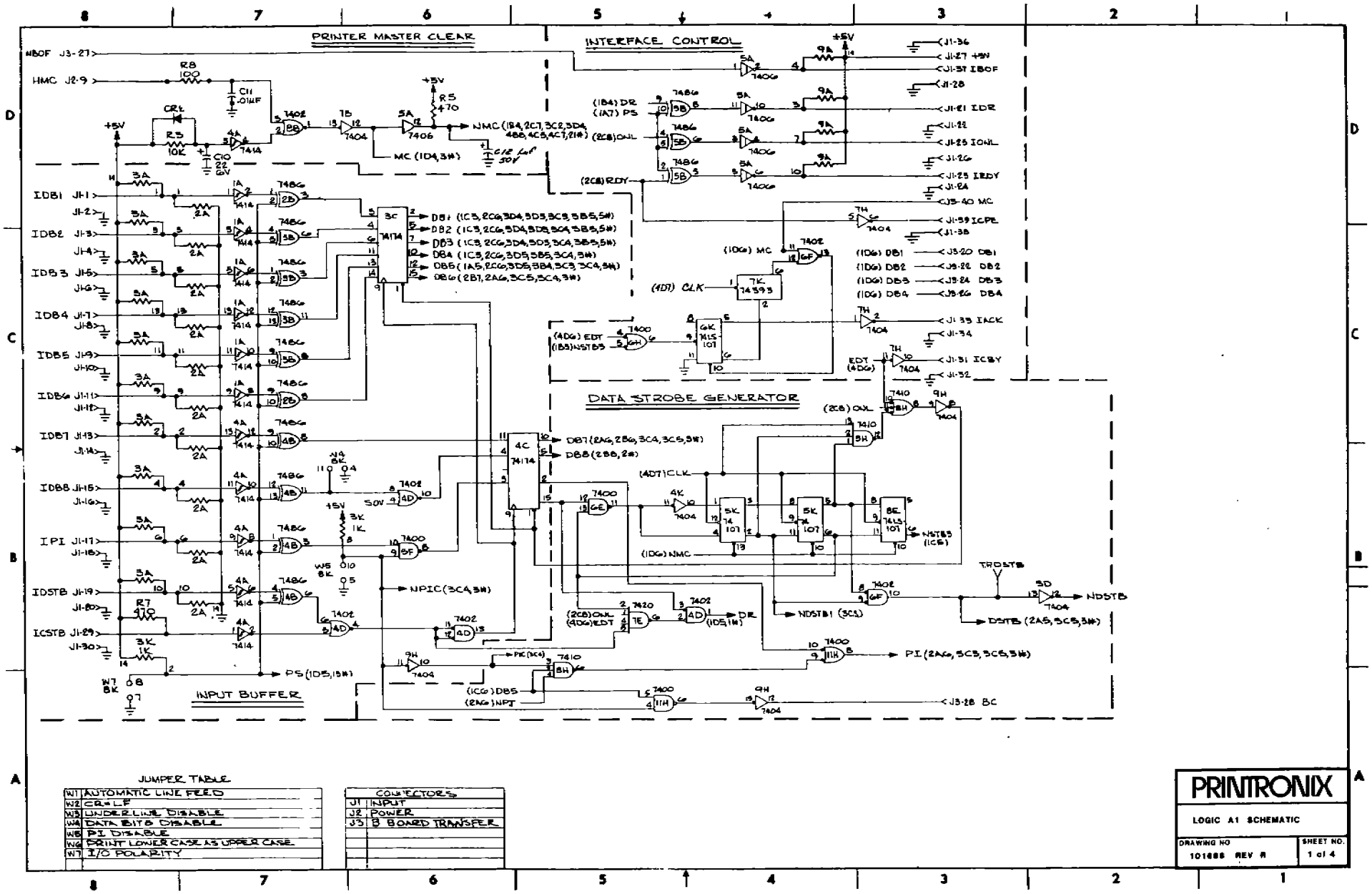

JUMPER TABLE

W1	AUTOMATIC LINE FEED
W2	CR=LF
W3	UNDERLINE DISABLE
W4	DATA BITS DISABLE
W5	PI DISABLE
W6	PRINT LOWER CASE AS UPPER CASE
W7	I/O POLARITY

CONNECTORS	
J1	INPUT
J2	POWER
J3	B BOARD TRANSFER

PRINTRONIX

LOGIC A1 SCHEMATIC

DRAWING NO 101488 REV R

SHEET NO. 1 of 4

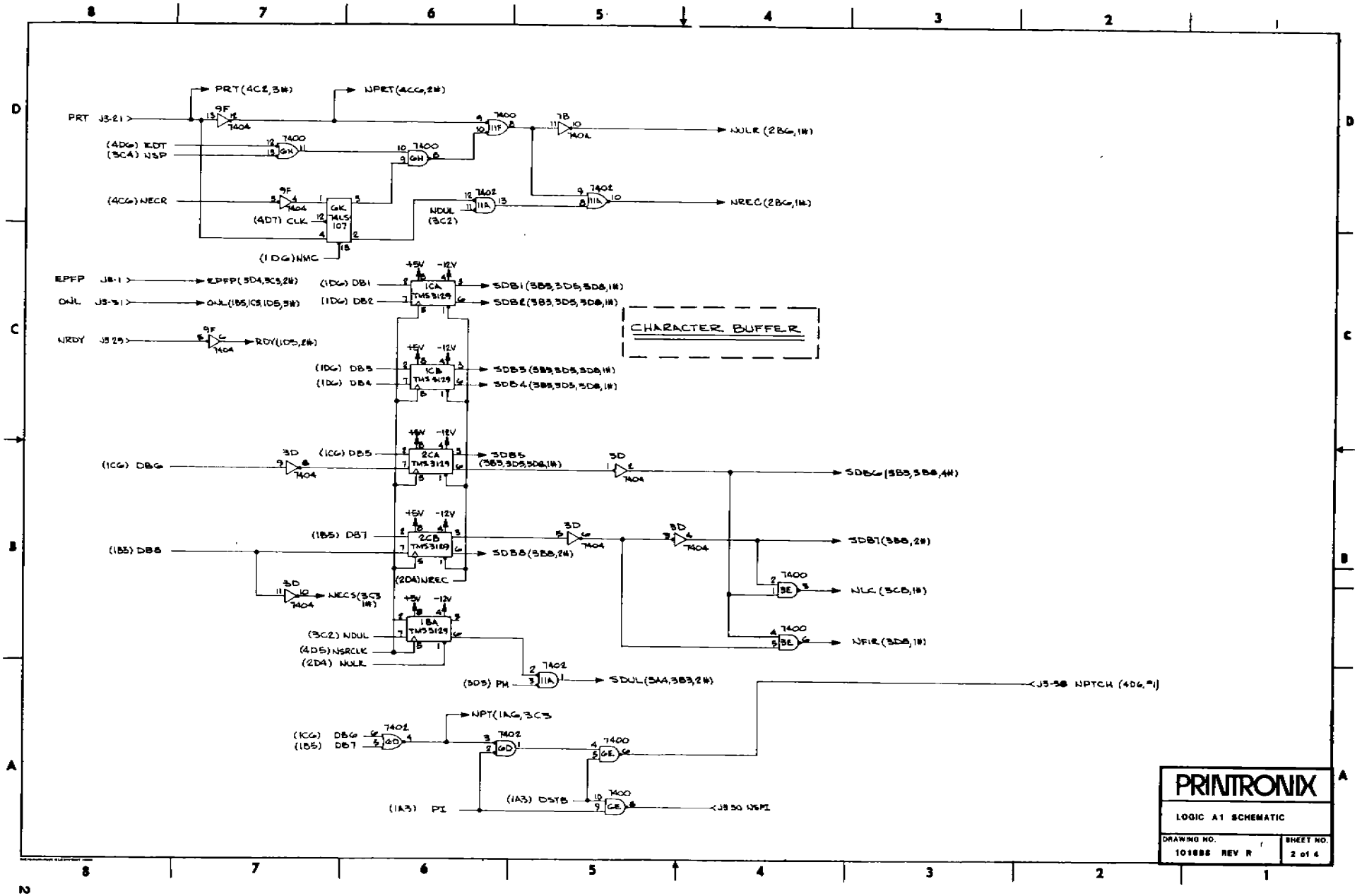
PRT J3-21
PRT(4C2,3#)
NPRT(4C6,2#)
(4D6) EDT
(3C4) NSP
(4C6) NECR
(4D7) CLK
(1D6) NMC
NDUL (3C2)
NULR (2B6,1#)
NREC(2B6,1#)
EPFP J3-1
EPFP(3D4,3C3,2#)
ONL J3-31
ONL(1B5,1C3,1D5,3#)
NRDY J3-29
RDY(1D5,2#)
(1D6) DB1
(1D6) DB2
SDB1(3B3,3D5,3D8,1#)
SDB2(3B3,3D5,3D8,1#)
CHARACTER BUFFER
(1D6) DB3
(1D6) DB4
SDB3(3B3,3D5,3D8,1#)
SDB4(3B3,3D5,3D8,1#)
(1C6) DB6
(1C6) DB5
SDB5 (3B3,3D5,3D8,1#)
SDB6(3B3,3B8,4#)
(1B5) DB7
(1B5) DB8
SDB8(3B8,2#)
SDB7(3B8,2#)
(2D4)NREC
NECS(3C3 1#)
NLC(3C8,1#)
NFIR(3D8,1#)
(3C2) NDUL
(4D5) NSRCLK
(2D4) NULR
(3D5) PM
SDUL(3A4,3B3,2#)
J3-38 NPTCH (4D6,#1)
NPT(1A6,3C3
(1C6) DB6
(1B5) DB7
(1A3) PI
(1A3) DSTB
J3-30 NSPI
PRINTRONIX
LOGIC A1 SCHEMATIC
DRAWING NO.
101888 REV R
SHEET NO.
2 of 4

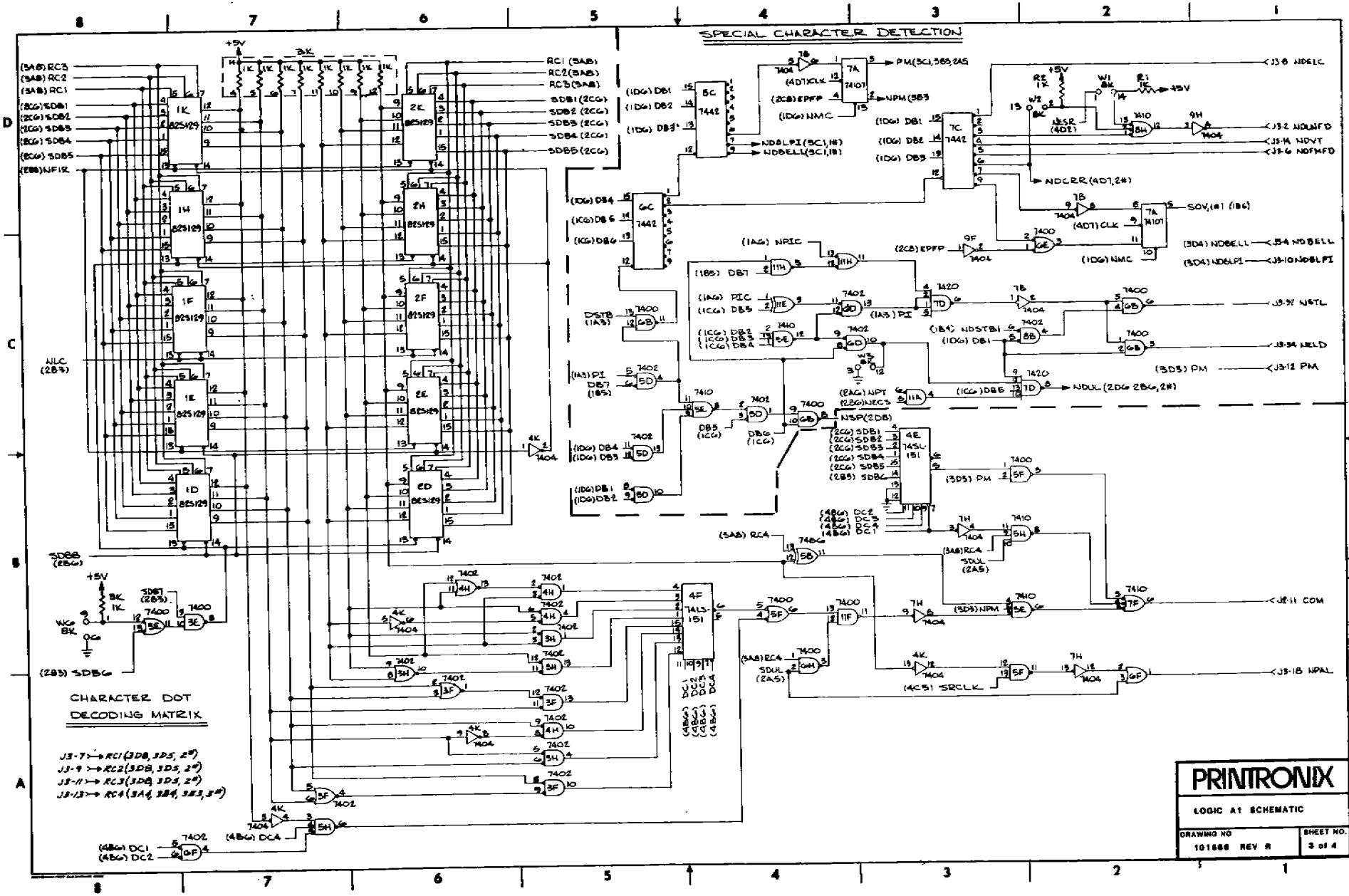
SPECIAL CHARACTER DETECTION
CHARACTER DOT DECODING MATRIX
J3-7 → RC1 (3D8, 3D5, 2#)
J3-9 → RC2 (3D8, 3D5, 2#)
J3-11 → RC3 (3D8, 3D5, 2#)
J3-13 → RC4 (3A4, 3B4, 3B3, 3#)
PRINTRONIX
LOGIC A1 SCHEMATIC
DRAWING NO 101668 REV R
SHEET NO. 3 of 4

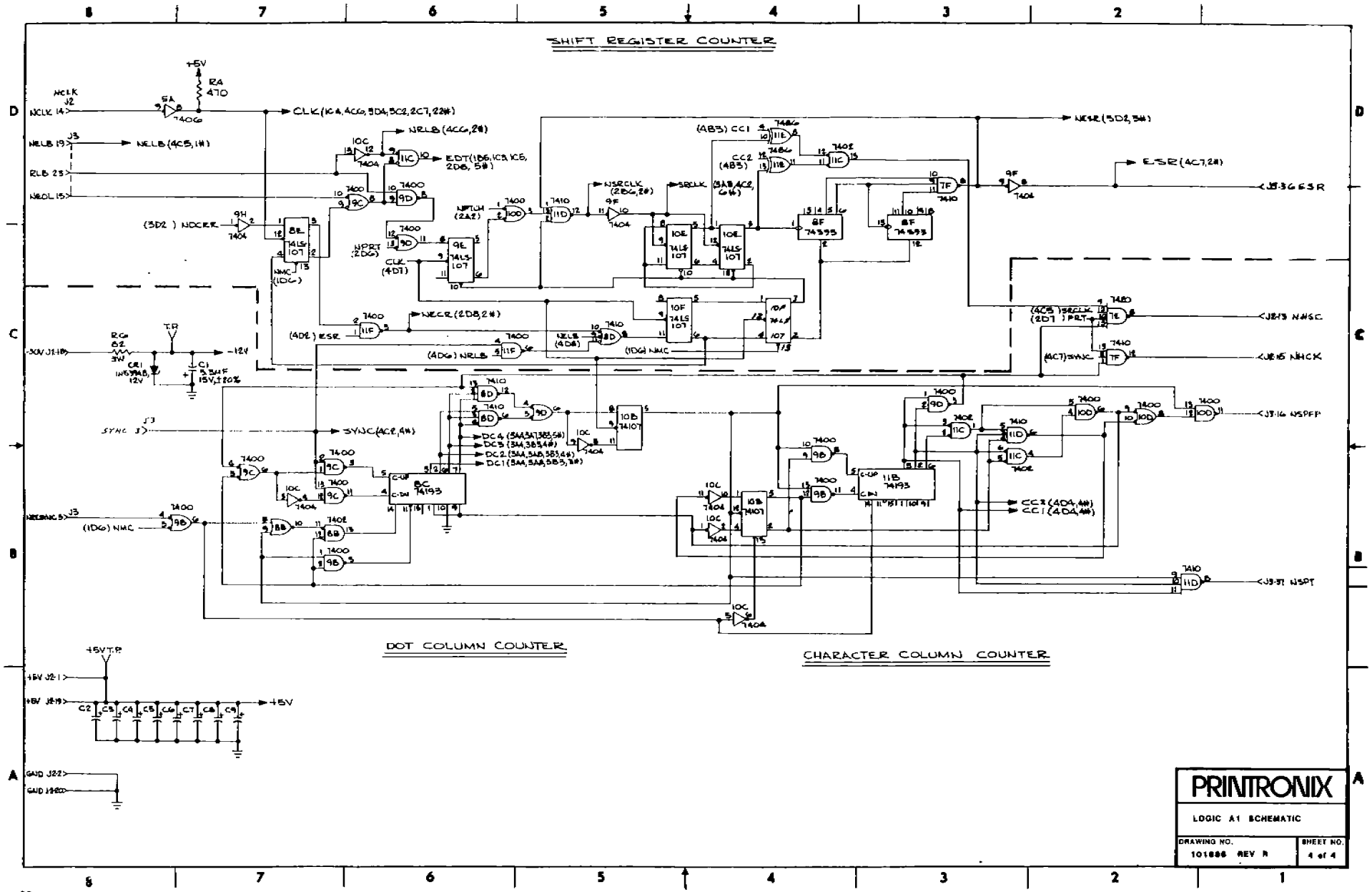
SHIFT REGISTER COUNTER
DOT COLUMN COUNTER
CHARACTER COLUMN COUNTER
PRINTRONIX
LOGIC A1 SCHEMATIC
DRAWING NO.
101886 REV R
SHEET NO.
4 of 4

6.0 DRAWINGS

6.7 LOGIC A4 PCBA
PART NUMBER 103831 REV AA

REFERENCE DESIGNATOR	DESCRIPTION	PART NUMBER	QTY
GND +5 -12V	Turret, Terminal	101380-001	4
C1	Capacitor, Tantalum, 15V ± 20%, 22uf	101362-005	1
C2 C5-C22	Capacitor, 15V, 20%, 3.3mfd	101362-001	19
C3	Capacitor, 50V, 20%, 1mfd	102233-001	1
C4	Capacitor, 200V, 20%, .01mfd	101363-001	1
CR1	Diode, IN5349 12V	101371-001	1
CR2	Diode, IN4004	101336-001	1
R1	Resistor, 5W, 120 ohm, ± 10%	101398-122	1
R2, R3, R7, R8 R13-R16, R18, R21, R22	Resistor, ¼W, 1K, ± 5%	101337-103	11
R4	Resistor, ¼W, 470 ohm, 5%	101337-472	1
R5	Resistor, ¼W, 330 ohm, ± 5%	101337-332	1
R7	Resistor, ¼W, 100 ohm, ± 5%	101337-102	1
R6, R9, R10, R11 R12, R19, R20	Resistor, ¼W, 10K, ± 5%	101337-004	1
S1, (4L)	Switch On-On	101592-001	1
TP-12V +5V GND STROBE	Terminal, Turret	101380-001	4
7B, 12B, 10C, 3E, 7E, 11E, 5F, 8F, 12F, 6H, 11H	I.C. 7400	101338-001	12
12A, 9B, 4D, 6D, 7D, 10E, 3F, 6F, 3H, 4H, 8L	I.C. 7402	101339-001	11
8B, 11C, 3D, 9F, 7H, 9H, 4K, 7L	I.C. 7404	101340-001	8
6A, 10F	I.C. 7406	101341-001	2
2L	I.C. 7407	102294-001	1
3L, 12K	I.C. 7408	104240-001	2
5E, 7F, 11F, 5H, 8H, 10H	I.C. 7410	101342-001	6
1A, 5A, 11L	I.C. 7414	101343-001	3
8D, 8E	I.C. 7420	101344-001	2
7C-9C	I.C. 7442	101345-001	3
9D	I.C. 7485	101347-001	1
1B, 3B-6B	I.C. 7486	101348-001	5

6.0 DRAWINGS

6.7 LOGIC A4 PCBA (Continued)
PART NUMBER 103831 REV AA

REFERENCE DESIGNATOR	DESCRIPTION	PART NUMBER	QTY
9A, 12C, 9E, 12H, 5K, 6K, 10K	I.C. 74107	101349-001	7
2B, 4E, 4F, 10L	I.C. 74151	101351-001	4
4A, 5C, 5D, 6L	I.C. 74157	102024-001	4
4C, 6C	I.C. 74174	101353-001	2
7A, 8A, 11A	I.C. 74367	104085-001	3
11B, 7K, 11K, 9L	I.C. 74393	101355-001	4
3CA, 3CB, 1LB, 5LA, 5LB	I.C. TMS 3129	101357-001	5
8K, 9K, 3A, 2A, 10A	Socket I.C. 14 Pin	101384-001	5
1C, 2C, 1D, 2D, 1E, 2E, 1F, 2F, 1H, 2H, 1K, 2K, 10D, 11D, 12D	Socket I.C. 16 Pin	101384-005	15
10A, 12E, 3K, 3A	Resistor PK, 14 Pin 1K	101381-102	4
N/A	Injector	101382-001	2
N/A	Pin, Roll	101319-010	2
N/A	PCB A4 Logic	104665-001	1
N/A	PCB Logic A4 Schematic	104044-000	REF
N/A	Wire, Solid 30 AWG, Blue	101617-001	A/R

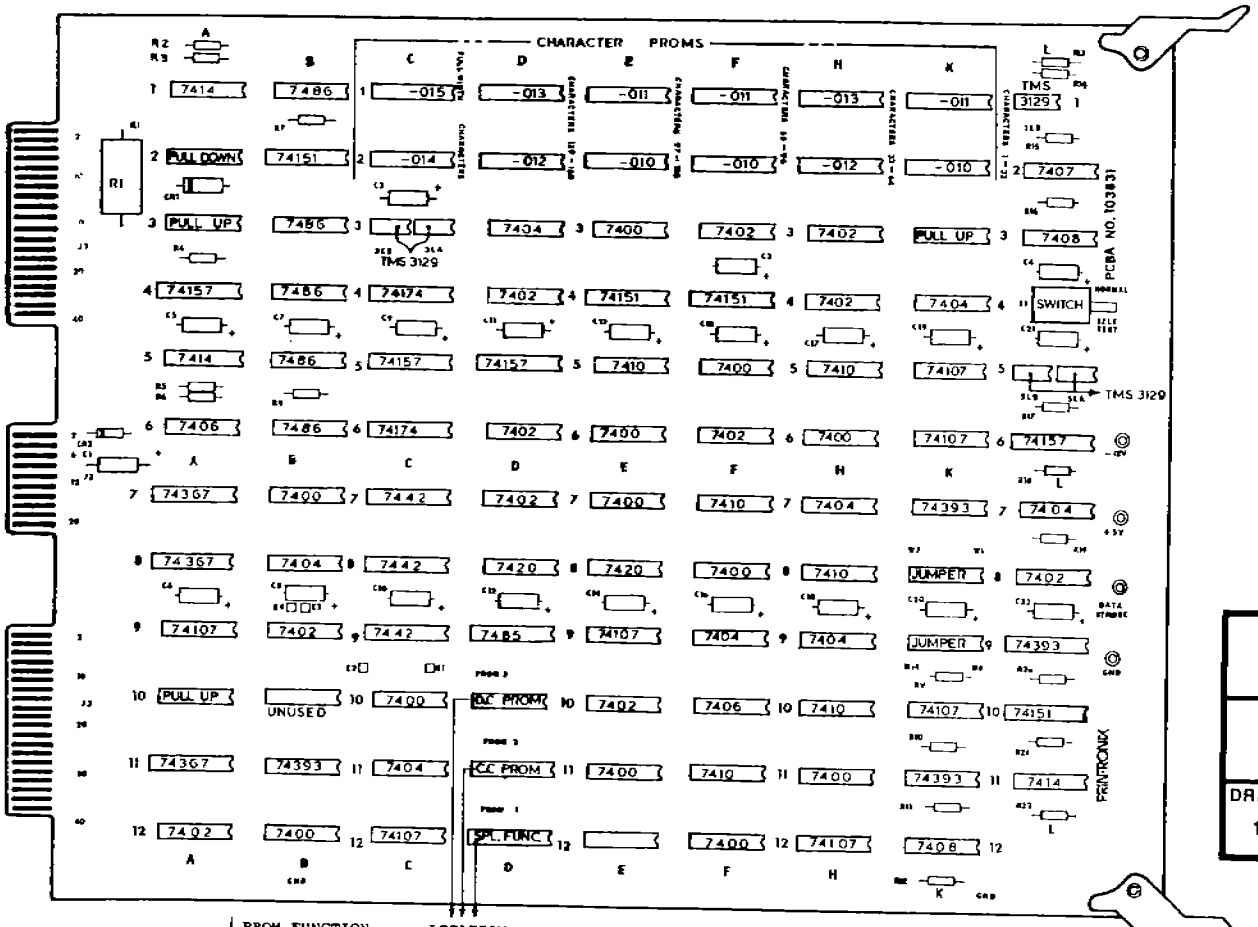

PROM FUNCTION	LOCATION	P150	P300	P600
Dot Column Counter	A4-12D	104246-001	104253-001	104021-001
Character Column Counter	A4-11D	104247-001	104254-001	104261-001
Controller	A4-10D	104248-001	104255-001	104262-001

PRINTRONIX

LOGIC A4 PCBA

DRAWING NO.	SHEET NO.
103831 REV AA	1 of 1

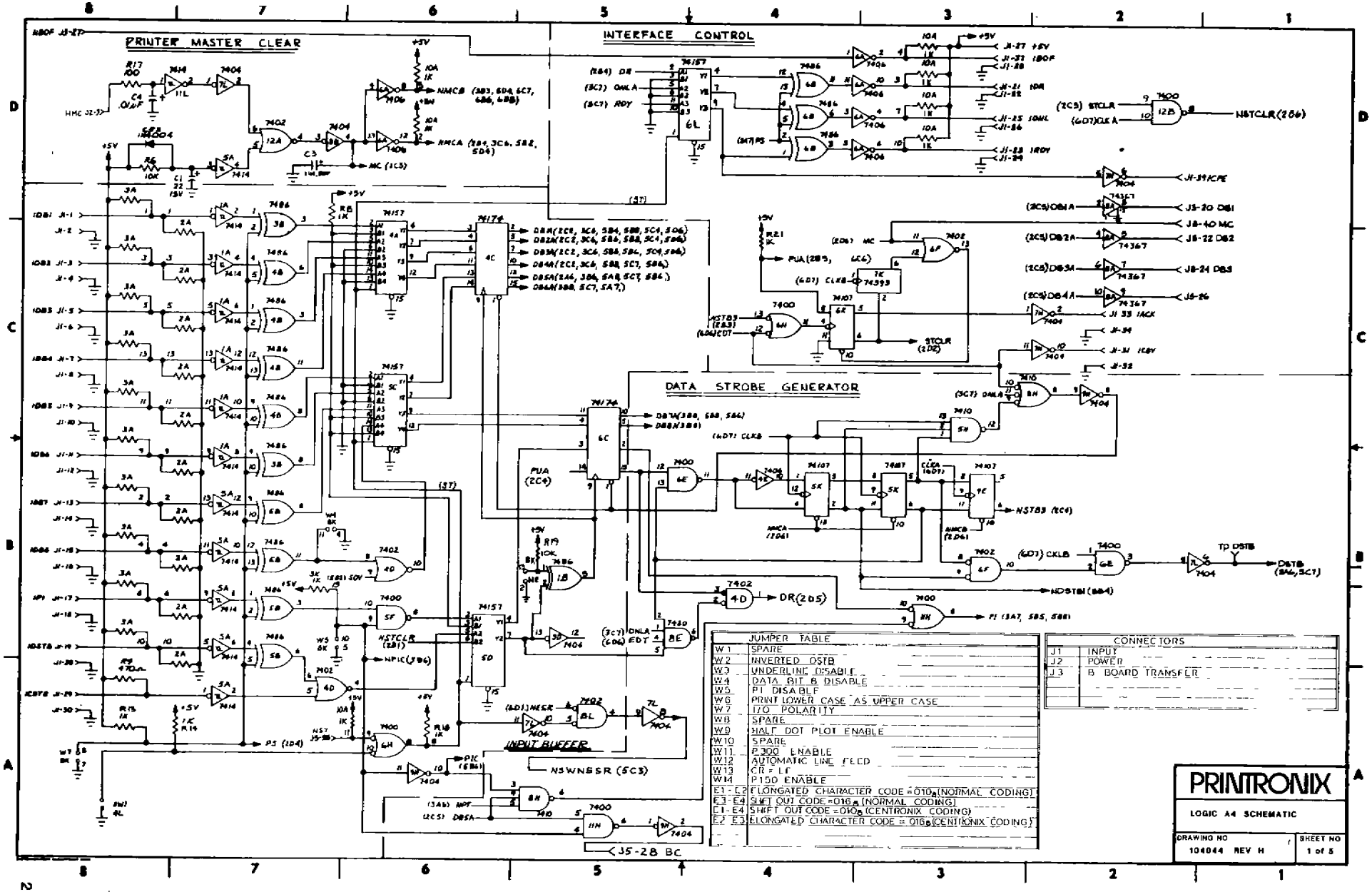

JUMPER TABLE	
W1	SPARE
W2	INVERTED DSTB
W3	UNDERLINE DISABLE
W4	DATA BIT 8 DISABLE
W5	P1 DISABLE
W6	PRINT LOWER CASE AS UPPER CASE
W7	I/O POLARITY
W8	SPARE
W9	HALF DOT PLOT ENABLE
W10	SPARE
W11	P300 ENABLE
W12	AUTOMATIC LINE FEED
W13	CR = LF
W14	P150 ENABLE
E1 - E2	ELONGATED CHARACTER CODE = 010_8 (NORMAL CODING)
E3 - E4	SHIFT OUT CODE = 016_8 (NORMAL CODING)
E1 - E4	SHIFT OUT CODE = 010_8 (CENTRONIX CODING)
E2 - E3	ELONGATED CHARACTER CODE = 016_8 (CENTRONIX CODING)

CONNECTORS	
J1	INPUT
J2	POWER
J3	B BOARD TRANSFER

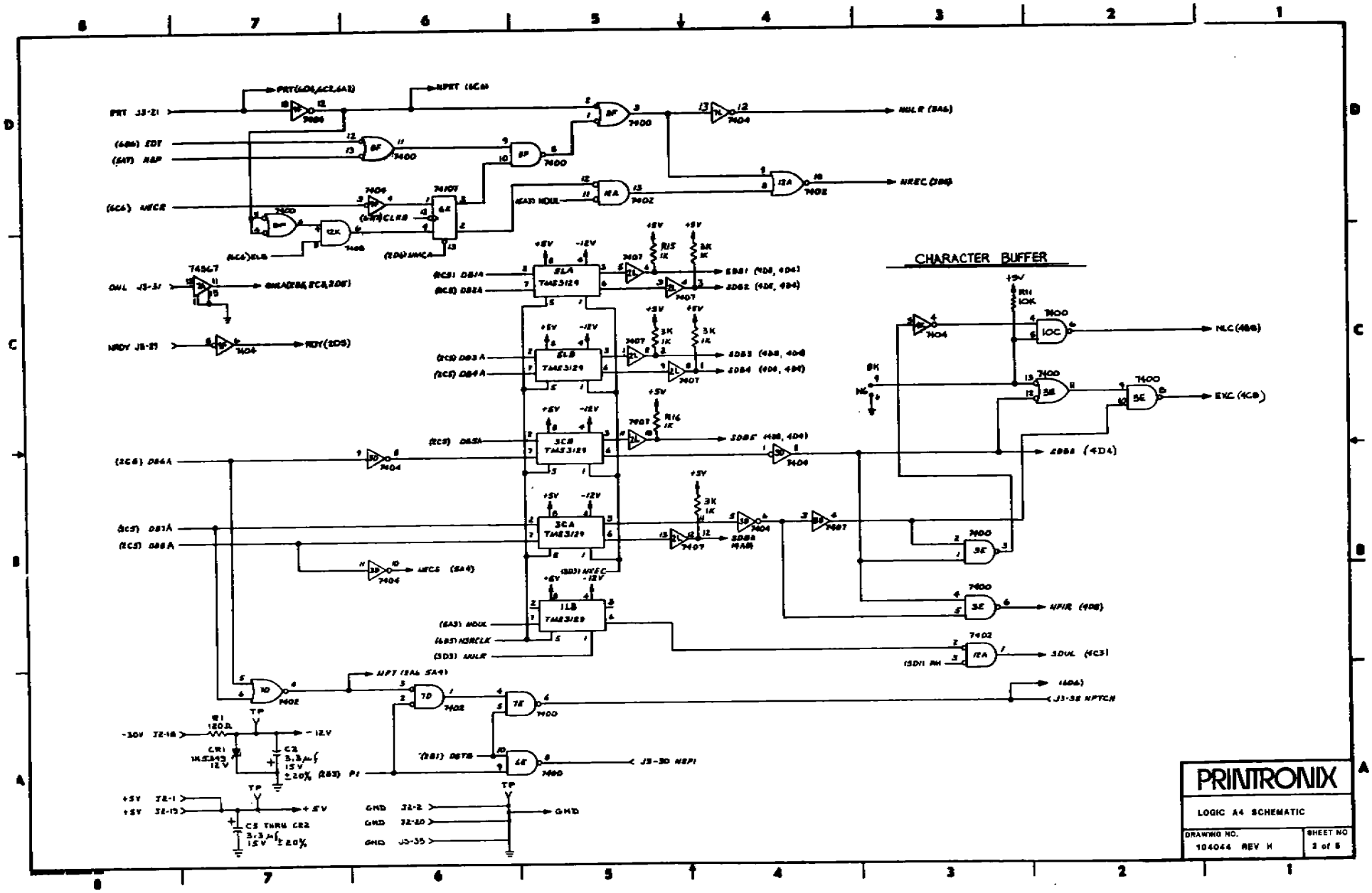
CHARACTER BUFFER
PRINTRONIX
LOGIC A4 SCHEMATIC
DRAWING NO.
104044 REV H
SHEET NO
2 of 5

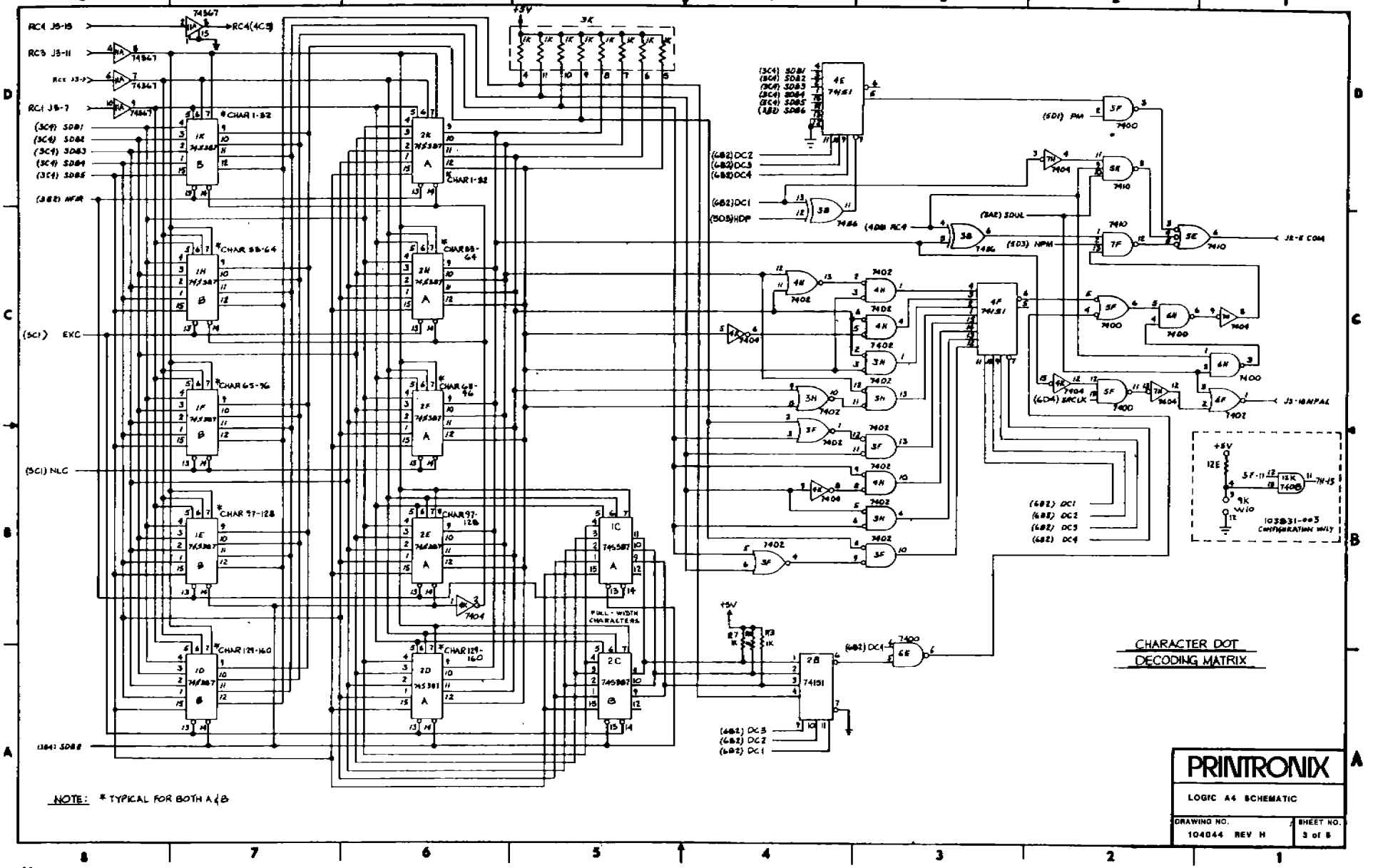
CHARACTER DOT DECODING MATRIX
PRINTRONIX
LOGIC A4 SCHEMATIC
DRAWING NO. 104044 REV H
SHEET NO. 3 of 8
NOTE: * TYPICAL FOR BOTH A & B
FULL - WIDTH CHARACTERS
CONFIGURATION ONLY

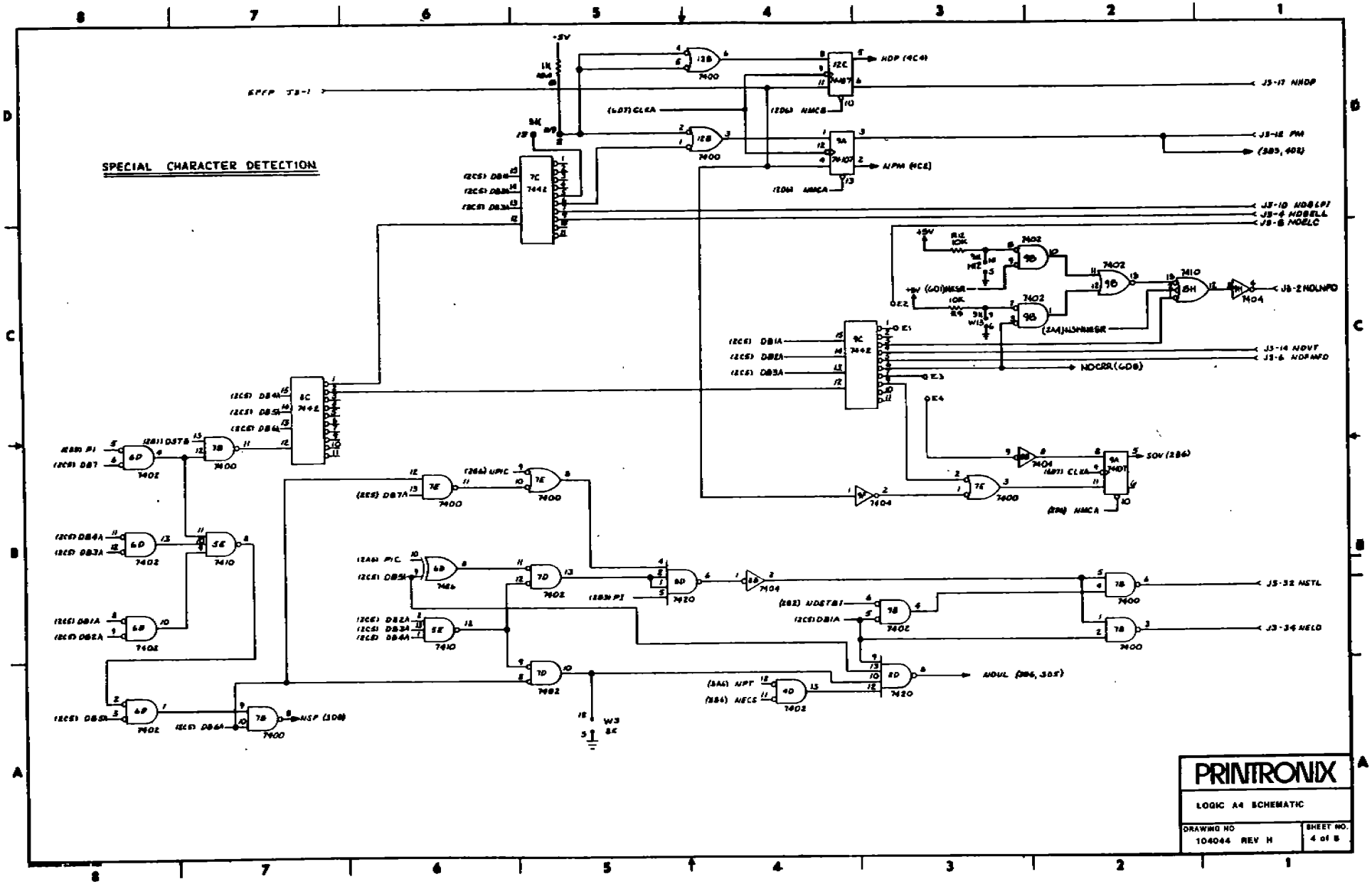
SPECIAL CHARACTER DETECTION
PRINTRONIX
LOGIC A4 SCHEMATIC
DRAWING NO
104044 REV H
SHEET NO.
4 of 8

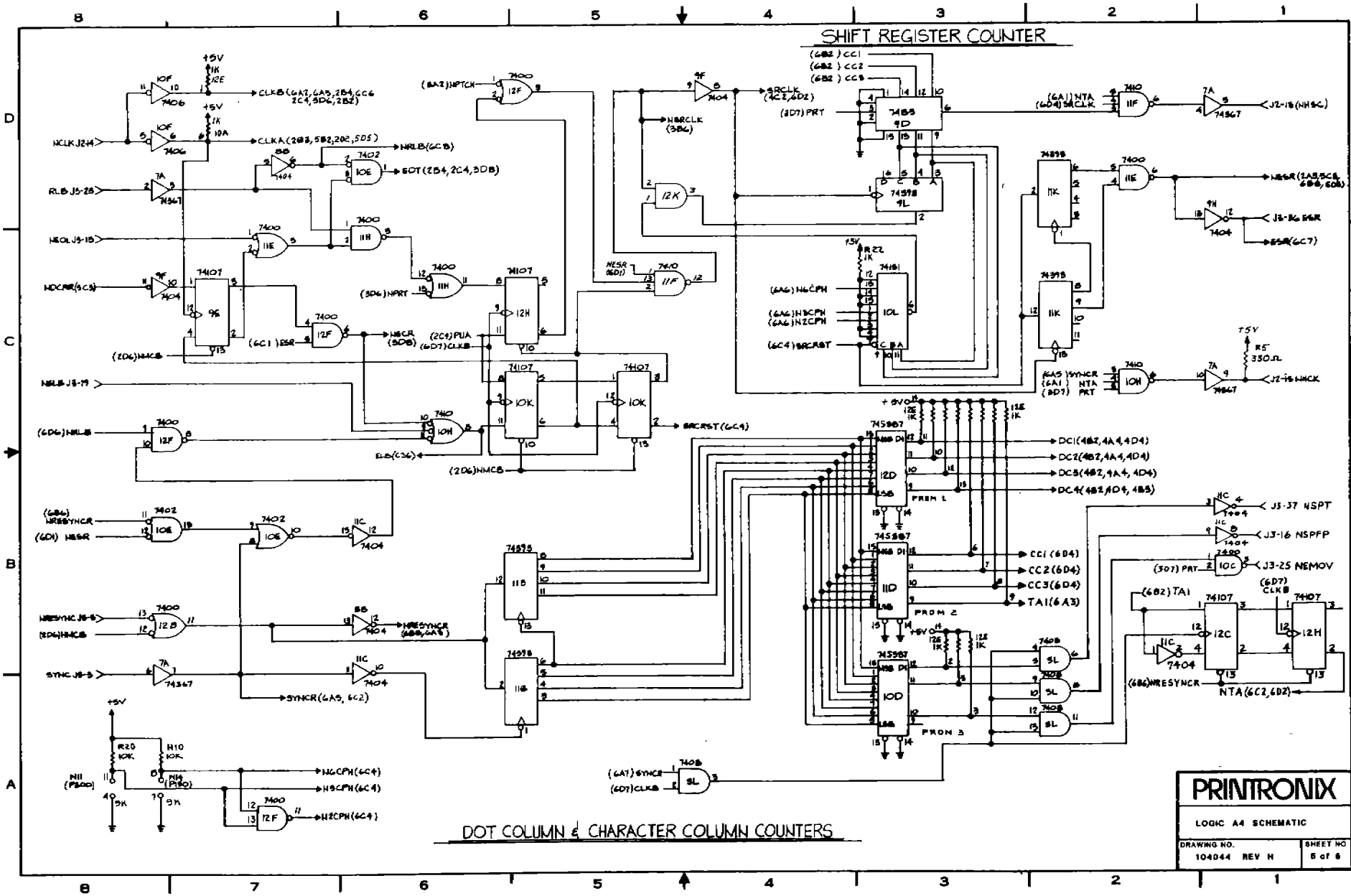
SHIFT REGISTER COUNTER
DOT COLUMN & CHARACTER COLUMN COUNTERS
PRINTRONIX
LOGIC A4 SCHEMATIC
DRAWING NO. 104044 REV H
SHEET NO 5 of 8
PROM 1
PROM 2
PROM 3

6.0 DRAWINGS

6.8 LOGIC A6 PCBA
PART NUMBER 106599 REV L

REFERENCE DESIGNATOR	DESCRIPTION	PART NUMBER	QTY
N/A	Pin, Roll	101319-001	2
TP1-TP3	Terminal, Turret	101380-001	3
N/A	Wire, Solid, 30 AWG, Blue	101617-001	A/R
N/A	Injector/Ejector	101382-001	2
2A-4A, 7A, 8K, 9K	Connector, Dip Socket, Low Profile, 14 Pin	101384-001	6
10D, 11D, 12D	Socket, I.C. 16 Pin	101384-005	3
1E, 3E	Socket, I.C. 24 Pin	101384-007	2
C19, C23	Capacitor, 200V, ± 10%, .01uf	101363-001	2
C1-18	Capacitor, 15V, ± 20%, 3.3uf	101362-001	18
C22	Capacitor, 15V, ± 20%, 22uf	101362-005	1
CR1	Rectifier, Silicon 1N4004	101336-001	1
R13	Resistor, ¼W, 47 ohm, 5%	101337-471	1
R11	Resistor, ¼W, 330 ohm, 5%	101337-332	1
R1	Resistor, ¼W, 470 ohm, 5%	101337-472	1
R2, R3, R8	Resistor, ¼W, 1K, 5%	101337-103	3
R4, R6, R7, R9, R10, R12	Resistor, ¼W, 10K, 5%	101337-104	6
3A, 4A, 7F, 12E	Resistor, Network, I.C. 1K	101381-102	4
S1	Toggle Switch, On-On	101592-001	1
4H, 5F, 6B, 6E, 6H, 7E, 8B, 8F, 10C, 11H, 11K, 12B, 12F	I.C. 74LS00	103299-001	13
3D, 3H, 4D, 6D, 6F, 7D, 8L, 9B, 10F	I.C. 74LS02	103319-001	9
2H, 7L, 9F, 9H, 10B, 11C	I.C. 74LS04	103330-001	6
5A	I.C. 7406	101341-001	1
9D, 10E, 12K	I.C. 74LS08	103331-001	3
5E, 5H, 8A, 8H, 10H, 11F	I.C. 74LS10	103332-001	6
1A, 3B	I.C. 74LS14	103333-001	2
8D, 8E	I.C. 74LS20	103334-001	2
7B	I.C. 74LS37	105503-001	1
5C-7C	I.C. 74LS42	103335-001	3
5L, 6L	I.C. 74LS74	103932-001	2
11E	I.C. 74LS85	102302-001	1
1B, 1C, 4B, 4F, 5B	I.C. 74LS86	103336-001	5

6.0 DRAWINGS

6.8 LOGIC A6 PCBA (Continued)
PART NUMBER 106599 REV L

REFERENCE DESIGNATOR	DESCRIPTION	PART NUMBER	QTY
5K, 6K, 9A, 9E, 10K, 12C, 12H	I.C. 74LS107	102302-001	7
1D	I.C. 74LS125	105685-001	1
1H, 4E, 10L	I.C. 74LS151	102301-001	3
2B, 2C, 2D, 5C, 5D, 11L	I.C. 74LS157	103337-001	6
3C, 6C	I.C. 74LS174	103339-001	2
2L, 3L	I.C. 74LS244	103342-001	2
10A, 11A	I.C. 74LS367	105504-001	2
4C, 7H	I.C. 7404	101340-001	2
4K, 7K, 9L, 11B	I.C. 74LS393	103343-001	4
1K, 2K, 3K	I.C. 2114	102976-001	3

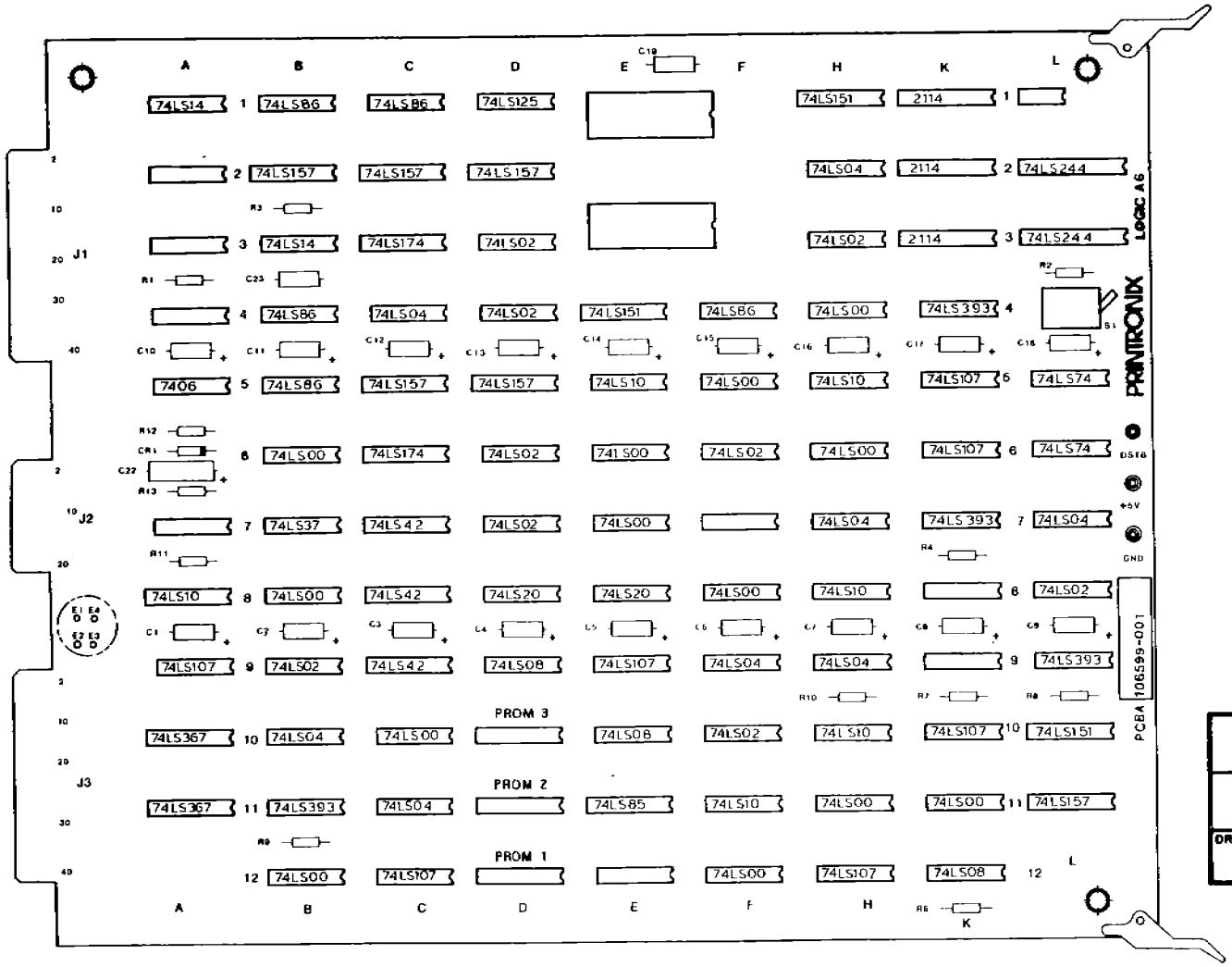

PRINTRONIX	
LOGIC A6 PCBA	
DRAWING NO. 106599 REV C	SHEET NO. 1 of 1

JUMPER TABLE

W1	PHASE FIRING ENABLE
W2	INVERTED DSTB
W3	UNDERLINE DISABLE
W4	DATA BIT 8 DISABLE
W5	PI DISABLE
W6	PRINT LOWER CASE AS UPPERCASE
W7	I/O POLARITY
W8	SPARE
W9	HALF DOT PLOT ENABLE
W10	OCR-8 ROW CHARACTERS
W11	P300
W12	AUTOMATIC LINE FEED
W13	CR=LF
W14	PI50
W15	HIGH VERTICAL RESOLUTION OPTION ENABLED WHEN NORMAL CHARACTER SET LOCATION, 3E, IS ADDRESSED
W16	HIGH VERTICAL RESOLUTION OPTION ENABLED WHEN ALTERNATE CHARACTER SET LOCATION, 1E, IS ADDRESSED.
E1-E2	ELONGATED CHARACTER CODE = 010_8 (NORM. CODING)
E3-E4	SHIFT OUT CODE = 016_8 (NORMAL CODING)
E1-E4	SHIFT OUT CODE = 010_8 (CENTRONIX CODING)
E2-E3	ELONGATED CHARACTER CODE = 016_8 (CENTRONIX CODING)

SCHEMATIC LOCATION OF JUMPER

JUMPER	SHEET	ZONE
W1	7	B5
W2	3	B5
W3	6	A5
W4	3	C6
W5	3	B6
W6	4	B4
W7	3	B7
W8	SPARE	SPARE
W9	6	C5
W10	5	A4
W11	4	A5
W12	6	B3
W13	6	B3
W14	4	A4
W15	4	C2
W16	4	C2
E1-E2	6	C5
E3-E4	6	B4

SPARE CIRCUITS

TYPE	LOCATION	OUTPUT PIN
74LS00	12B	6
	6E	3,6
	4H	8,11
	6H	6
	11K	6,8
	11K	11,3
	6B	8
74LS02	3H	13
	8L	4,10,13
	3D	13
74LS04	2H	2
	9H	6
	7L	10
7404	4C	2,12
	7H	6,8,12
7406	5A	8,12
74LS10	10H	12
	8A	12
	11F	6
74LS20	8E	8
74LS86	1C	3,6
74LS125	1D	8,11
74LS393	9L	8,9,10 11
	7K	8,9,10 11
1K PULLUP	4A	3 5 7 9 12
1K PULLUP	7F	6,7,8, 9,10,11, 12

I.C. AND VOLTAGE INFO

TYPE	GND PIN	+5V PIN
74LS00	7	14
74LS02	7	14
74LS04	7	14
7406	7	14
74LS08	7	14
74LS10	7	14
74LS14	7	14
74LS20	7	14
74LS37	7	14
74LS42	8	16
74LS74	7	14
74LS85	8	16
74LS86	7	14
74LS107	7	14
74LS125	7	14
74LS151	8	16
74LS157	8	16
74LS174	8	16
74LS244	10	20
74LS367	8	16
74LS387	8	16
74LS393	7	14
2114	9	18
2716	12	24
7404	7	14

CONNECTORS

J1	INPUT
J2	POWER
J3	B BOARD TRANSFER

LAST REF DESIG USED	DESIG NOT USED
C23	C20, C21
CR1	
R13	R5
S1	
TP3	

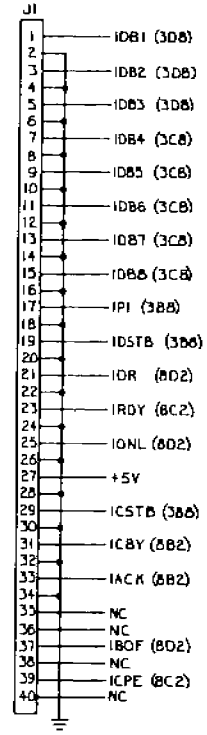

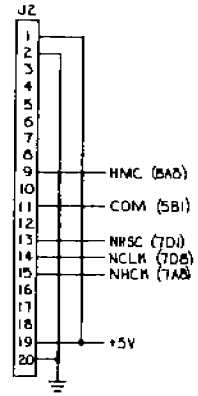

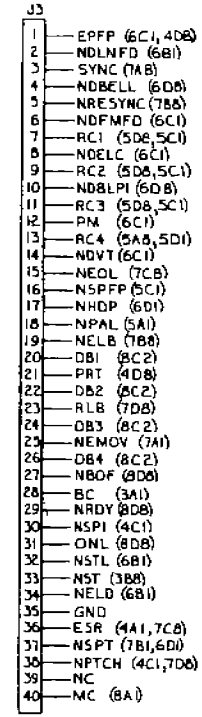

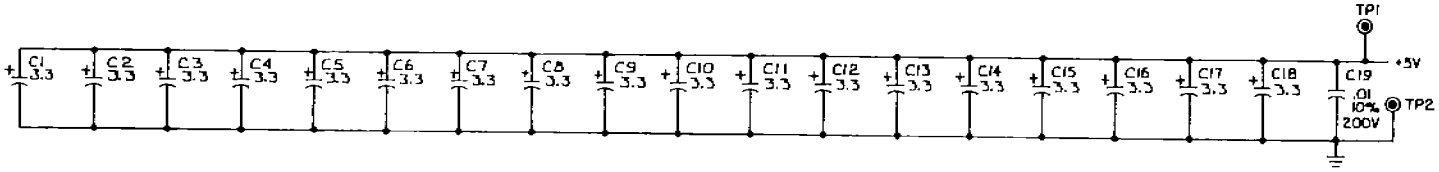

PRINTRONIX

LOGIC A8 SCHEMATIC

DRAWING NO 106598 REV F

SHEET NO 1 of 8

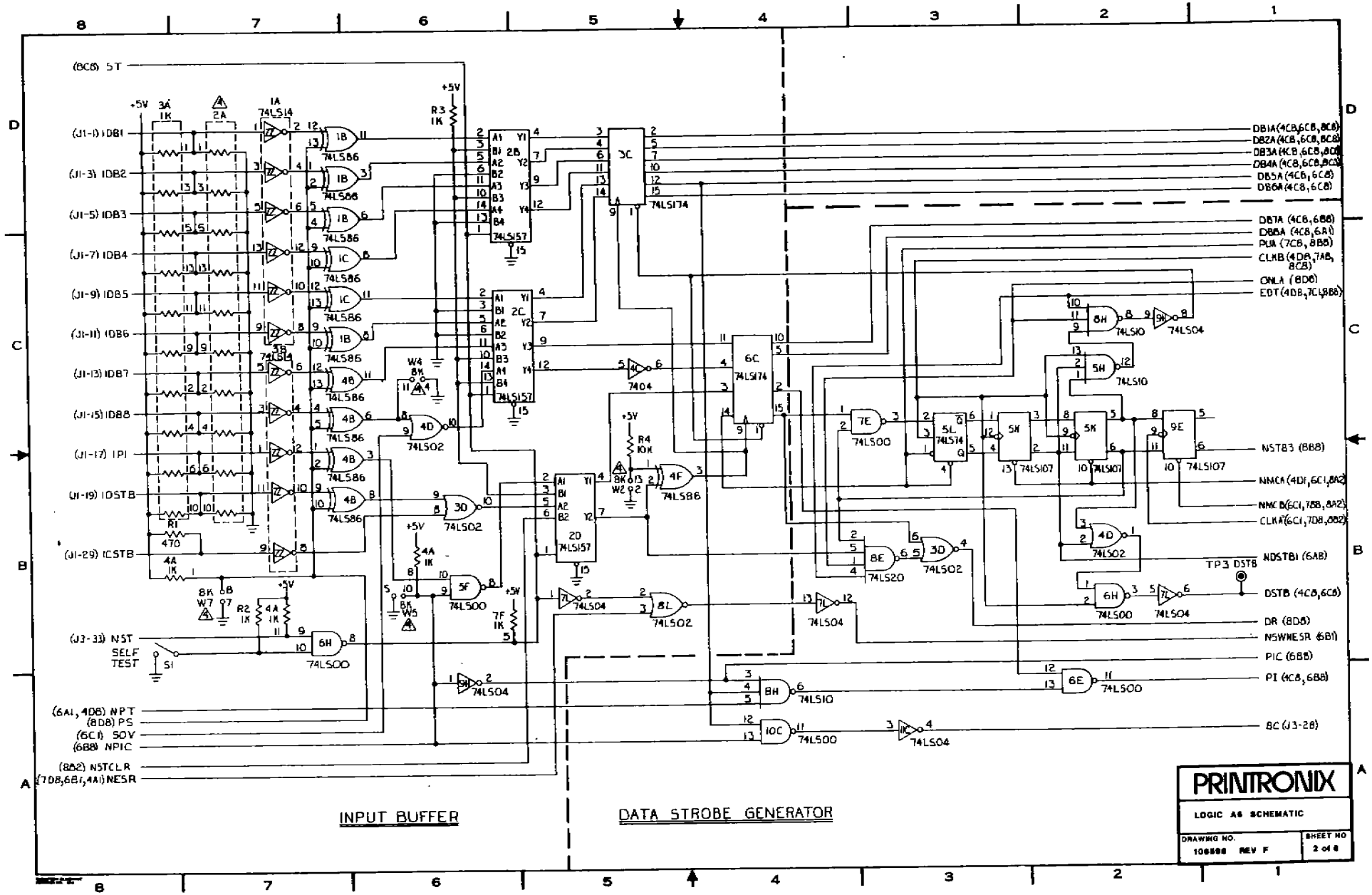
(8C8) ST
(J1-1) IDB1
(J1-3) IDB2
(J1-5) IDB3
(J1-7) IDB4
(J1-9) IDB5
(J1-11) IDB6
(J1-13) IDB7
(J1-15) IDB8
(J1-17) IPI
(J1-19) IDSTB
(J1-29) ICSTB
(J3-33) NST
SELF TEST
(6A1, 4D8) NPT
(8D8) PS
(6C1) SOV
(6B8) NPIC
(8B2) NSTCLR
(7D8,6B1,4A1) NESR
DB1A (4C8,6C8,8C8)
DB2A (4C8,6C8,8C8)
DB3A (4C8,6C8,8C8)
DB4A (4C8,6C8,8C8)
DB5A (4C8,6C8)
DB6A (4C8,6C8)
DB7A (4C8,6B8)
DB8A (4C8,6A1)
PUA (7C8,8B8)
CLKB (4D8,7A8,8C8)
ONLA (8D8)
EDT (4D8,7C1,8B8)
NST83 (8B8)
NMCA (4D1,6C1,8A2)
NMCB (6C1,7B8,8A2)
CLKA (6C1,7D8,8B2)
NDSTB1 (6A8)
TP3 DSTB
DSTB (4C8,6C8)
DR (8D8)
NSWNESR (6B1)
PIC (6B8)
PI (4C8,6B8)
BC (J3-28)
INPUT BUFFER
DATA STROBE GENERATOR
PRINTRONIX
LOGIC A6 SCHEMATIC
DRAWING NO. 106598 REV F
SHEET NO 2 of 8

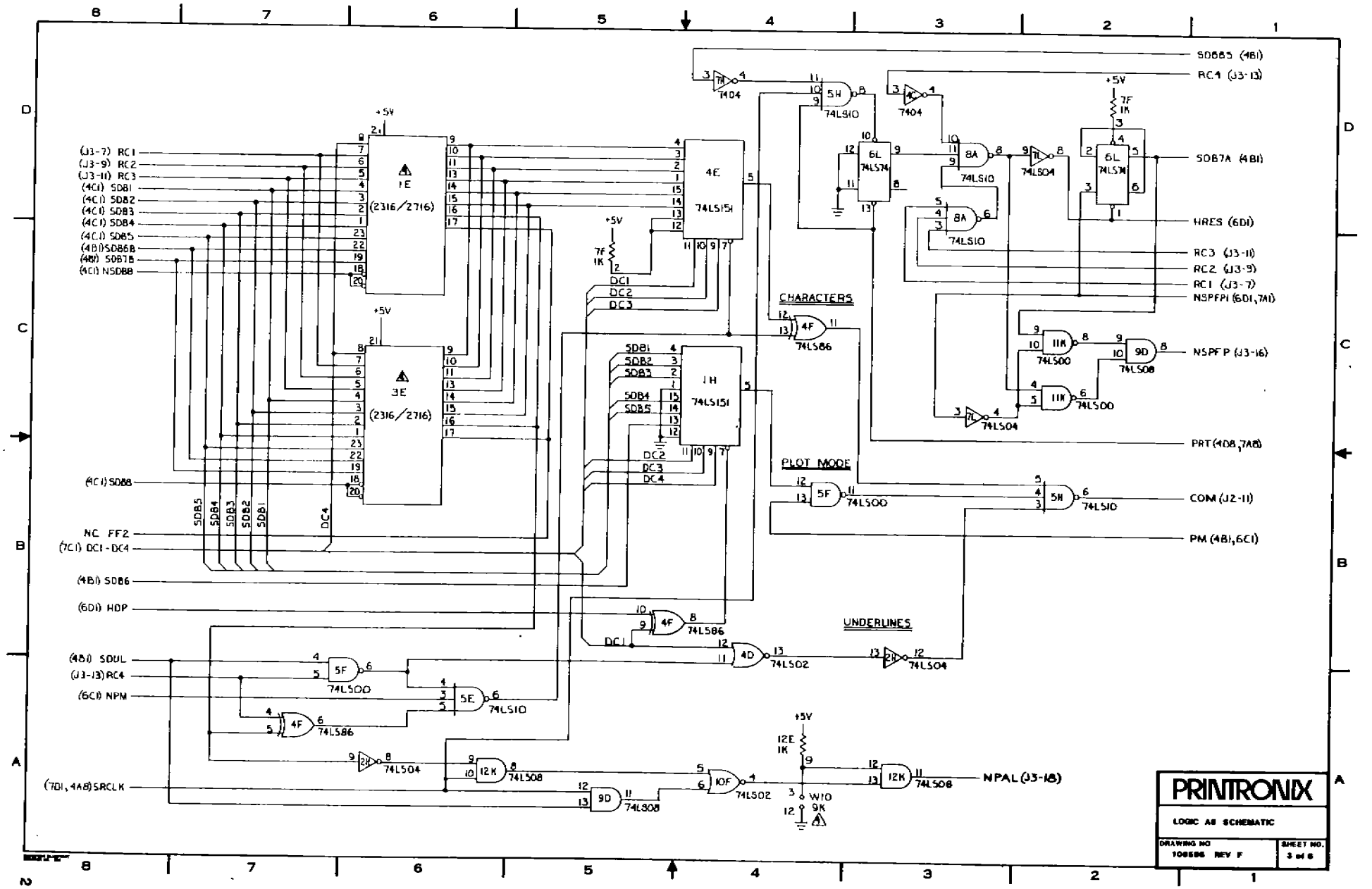
(J3-7) RC1
(J3-9) RC2
(J3-11) RC3
(4C1) SDB1
(4C1) SDB2
(4C1) SDB3
(4C1) SDB4
(4C1) SDB5
(4B1) SDB6B
(4B1) SDB7B
(4C1) NSDB8
(4C1) SDB8
NC FF2
(7C1) DC1-DC4
(4B1) SDB6
(6D1) HDP
(4B1) SDUL
(J3-13) RC4
(6C1) NPM
(7D1, 4A8) SRCLK
1E
(2316/2716)
3E
(2316/2716)
4E
74LS151
1H
74LS151
+5V
7F
1K
DC1
DC2
DC3
DC4
SDB1
SDB2
SDB3
SDB4
SDB5
CHARACTERS
PLOT MODE
UNDERLINES
SDB6S (4B1)
RC4 (J3-13)
SDB7A (4B1)
HRES (6D1)
RC3 (J3-11)
RC2 (J3-9)
RC1 (J3-7)
NSPFPI (6D1, 7A1)
NSPFP (J3-16)
PRT (4D8, 7A8)
COM (J2-11)
PM (4B1, 6C1)
NPAL (J3-18)
12E
1K
W10
9K
7404
74LS10
74LS74
74LS04
74LS00
74LS08
74LS86
74LS02
PRINTRONIX
LOGIC A8 SCHEMATIC
DRAWING NO
108586 REV F
SHEET NO.
3 of 6

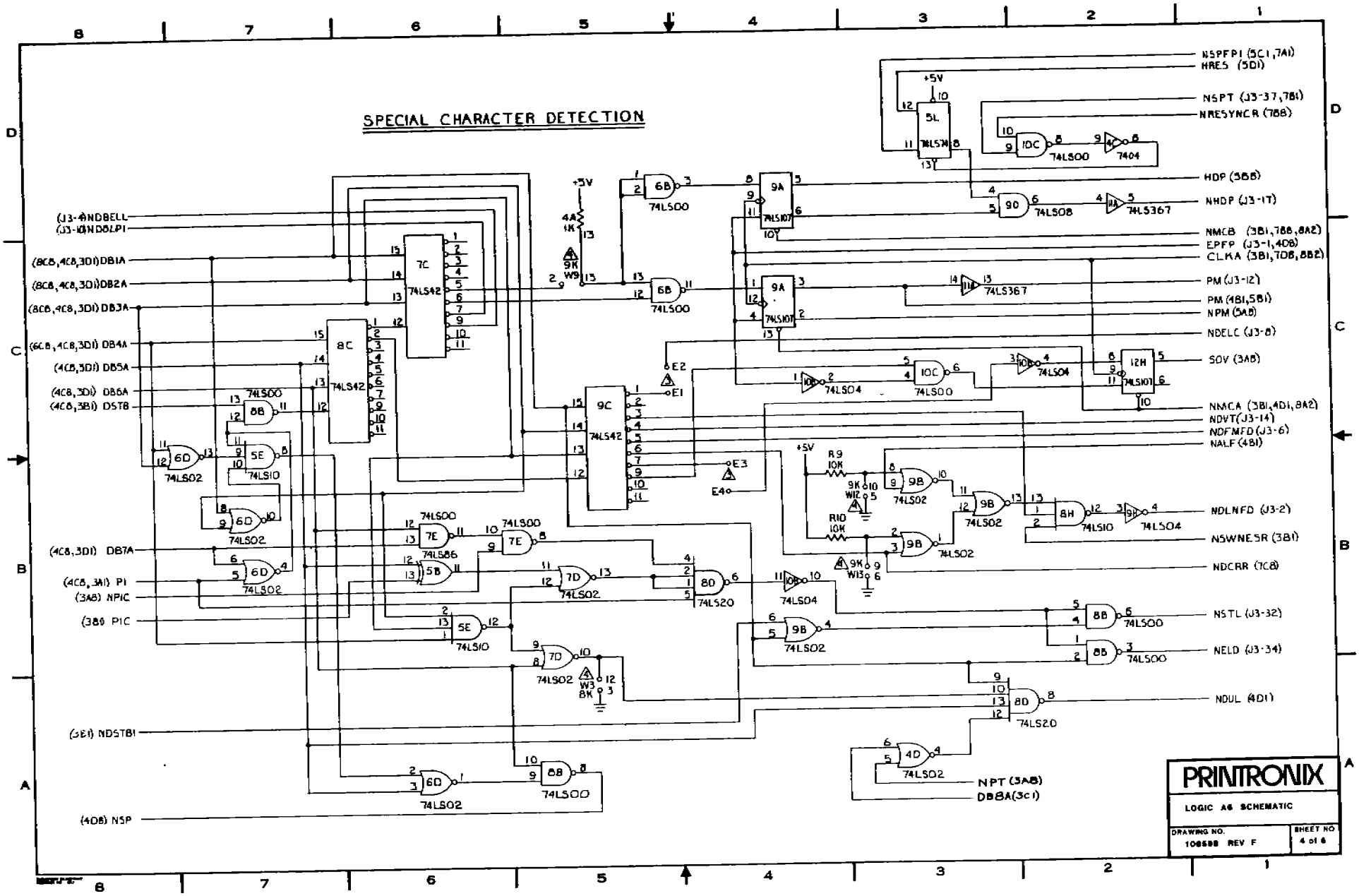
SPECIAL CHARACTER DETECTION
(J3-4)NDBELL
(J3-10)NDBLPI
(8C8,4C8,3D1)DB1A
(8C8,4C8,3D1)DB2A
(8C8,4C8,3D1)DB3A
(6C8,4C8,3D1) DB4A
(4C8,3D1) DB5A
(4C8,3D1) DB6A
(4C8,3B1) DSTB
(4C8,3D1) DB7A
(4C8,3A1) PI
(3A8) NPIC
(3B0 PIC
(3E1) NDSTB1
(4D8) NSP
NSPFPI (5C1,7A1)
HRES (5D1)
NSPT (J3-37,7B1)
NRESYNCR (7B8)
HDP (5B8)
NHDP (J3-17)
NMCB (3B1,7B8,8A2)
EPFP (J3-1,4D8)
CLKA (3B1,7D8,8B2)
PM (J3-12)
PM (4B1,5B1)
NPM (5A8)
NDELC (J3-8)
SOV (3A8)
NMCA (3B1,4D1,8A2)
NDVT(J3-14)
NDFMFD (J3-6)
NALF (4B1)
NDLNFD (J3-2)
NSWNESR (3B1)
NDCRR (7C8)
NSTL (J3-32)
NELD (J3-34)
NDUL (4D1)
NPT (3A8)
DB8A(3C1)
PRINTRONIX
LOGIC A6 SCHEMATIC
DRAWING NO.
108598 REV F
SHEET NO
4 of 6

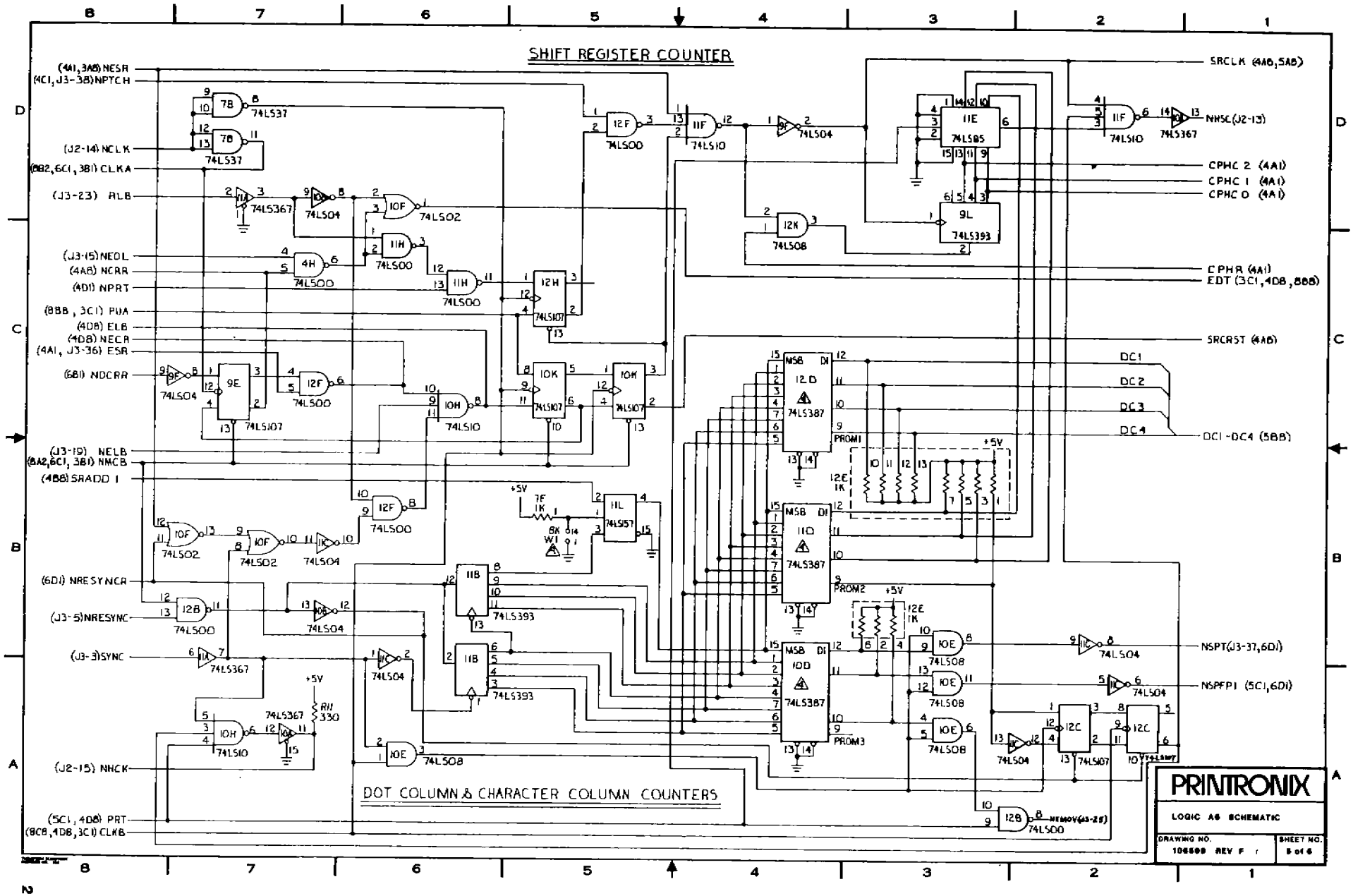
SHIFT REGISTER COUNTER
DOT COLUMN & CHARACTER COLUMN COUNTERS
(4A1,3A8) NESR
(4C1,J3-38) NPTCH
(J2-14) NCLK
(8B2,6C1,3B1) CLKA
(J3-23) RLB
(J3-15) NEOL
(4A8) NCRR
(4D1) NPRT
(8B8,3C1) PUA
(4D8) ELB
(4D8) NECR
(4A1,J3-36) ESR
(6B1) NDCRR
(J3-19) NELB
(8A2,6C1,3B1) NMCB
(4B8) SRADD 1
(6D1) NRESYNCR
(J3-5) NRESYNC
(J3-3) SYNC
(J2-15) NHCK
(5C1,4D8) PRT
(8C8,4D8,3C1) CLKB
SRCLK (4A8,5A8)
NHSC (J2-13)
CPHC 2 (4A1)
CPHC 1 (4A1)
CPHC 0 (4A1)
CPHR (4A1)
EDT (3C1,4D8,8B8)
SRCRST (4A8)
DC1
DC2
DC3
DC4
DC1-DC4 (5B8)
NSPT (J3-37,6D1)
NSPFP1 (5C1,6D1)
NEMOV (J3-25)
PROM1
PROM2
PROM3
+5V
PRINTRONIX
LOGIC A6 SCHEMATIC
DRAWING NO.
106509 REV F
SHEET NO.
5 of 6

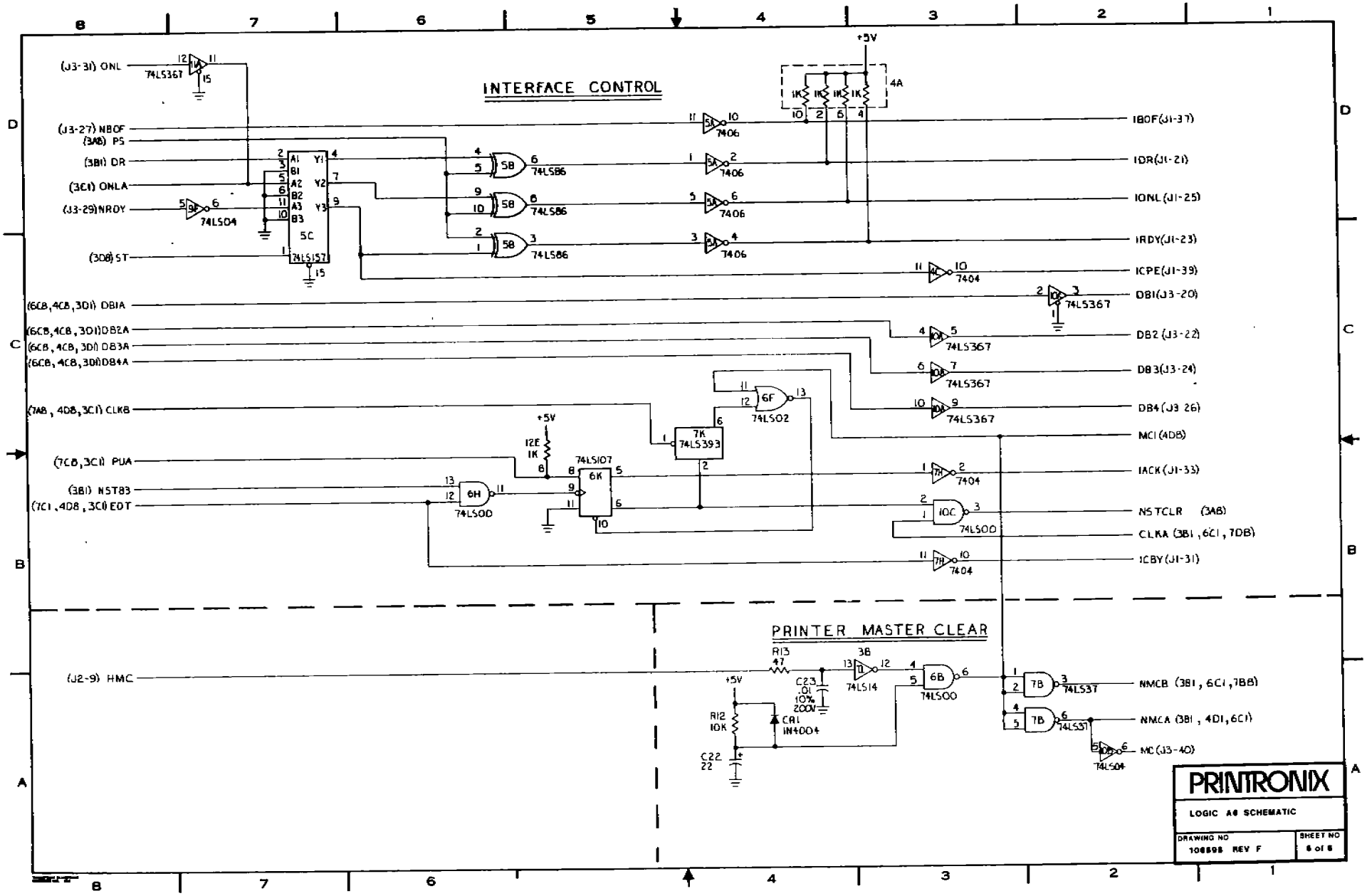
INTERFACE CONTROL
PRINTER MASTER CLEAR
(J3-31) ONL
(J3-27) NBOF
(3A8) PS
(3B1) DR
(3C1) ONLA
(J3-29) NRDY
(3D8) ST
(6C8,4C8,3D1) DB1A
(6C8,4C8,3D1) DB2A
(6C8,4C8,3D1) DB3A
(6C8,4C8,3D1) DB4A
(7A8,4D8,3C1) CLK8
(7C8,3C1) PUA
(3B1) NST83
(7C1,4D8,3C1) EOT
(J2-9) HMC
IBOF(J1-37)
IDR(J1-21)
IONL(J1-25)
IRDY(J1-23)
ICPE(J1-39)
DB1(J3-20)
DB2 (J3-22)
DB3(J3-24)
DB4(J3 26)
MC1(4D8)
IACK(J1-33)
NSTCLR (3A8)
CLKA (3B1,6C1,7D8)
ICBY(J1-31)
NMCB (3B1,6C1,7B8)
NMCA (3B1,4D1,6C1)
MC(J3-40)
+5V
74LS367
74LS04
74LS157
74LS86
7406
7404
74LS393
74LS02
74LS107
74LS00
74LS14
74LS37
74LS31
PRINTRONIX
LOGIC A8 SCHEMATIC
DRAWING NO
108598 REV F
SHEET NO
6 of 6

6.0 DRAWINGS

6.9 LOGIC A7 PCBA
PART NUMBER 107329 REV A

REFERENCE DESIGNATOR	DESCRIPTION	PART NUMBER	QTY
TP1-TP3	Terminal Turret	101380-001	3
N/A	Injector/Ejector	101382-001	2
N/A	Pin, Roll	101319-001	2
1H, 2A, 3A, 8A, 9A, 12F	Socket, I.C. 14 Pin	101384-001	6
2K, 6L, 9L, 10L, 11L	Socket, I.C. 16 Pin	101384-005	5
6K, 7K	Socket, I.C. 28 Pin	101384-003	2
C19, C20	Capacitor, 200V, 10%, .01uf	101363-001	2
C1-C18	Capacitor, 15V, 20%, 3.3uf	101362-001	18
C21	Capacitor, 15V, 20%, 22uf	101362-005	1
CR1	Diode, 1N4004	101336-001	1
J4	Connector, Header, 3 Pin	107603-001	1
R3	Resistor, ¼W, 47 ohm, 5%	101337-471	1
R2	Resistor, ¼W, 330 ohm, 5%	101337-332	1
R1	Resistor, ¼W, 470 ohm, 5%	101337-472	1
R4	Resistor, ¼W, 10K, 5%	101337-104	1
2H, 3A, 8A, 11F	Resistor, Network, Dip, 1K, 2%	101381-102	4
S1	Switch, Toggle On-On	101592-001	1
1L, 3D, 3E, 3F, 3H, 6C, 8B, 8D, 8E, 9E, 11B, 11C, 11E, 12K	I.C. 74LS00	103299-001	14
1E, 2E, 5B, 7D, 9D, 10E	I.C. 74LS02	103319-001	6
1F, 8C, 8F, 10C, 11K	I.C. 74LS04	103330-001	5
6A	I.C. 7406	101341-001	1
5C	I.C. 7404	101340-001	1
4C, 4E, 12A, 12E	I.C. 74LS08	103331-001	4
2F, 4F, 5E, 6F, 7F, 12H	I.C. 74LS10	103332-001	6
1A, 4A	I.C. 74LS14	103333-001	2
7E	I.C. 74LS20	103334-001	1
7C	I.C. 74LS37	105503-001	1
1C, 1D, 2D	I.C. 74LS42	103335-001	3

6.0 DRAWINGS

6.9 LOGIC A7 PCBA (Continued)
PART NUMBER 107329 REV A

REFERENCE DESIGNATOR	DESCRIPTION	PART NUMBER	QTY
4D, 5F, 11D	I.C. 74LS74	103932-001	3
8L	I.C. 74LS85	102303-001	1
1B, 4B, 5A, 7A, 9F, 10B	I.C. 74LS86	103336-001	6
2L, 5D, 6D, 10D, 11H, 12B, 12C, 12D	I.C. 74LS107	102302-001	8
10F	I.C. 74LS125	105685-001	1
9H, 9K	I.C. 74LS151	102301-001	2
2B, 3B, 6B, 6E, 7B, 10H	I.C. 74LS157	103337-001	6
2C, 3C	I.C. 74LS174	103339-001	2
4H, 5H	I.C. 74LS244	103342-001	2
10A, 11A	I.C. 74LS367	105504-001	2
1K, 7L, 10K	I.C. 74LS393	103343-001	3
3K-5K	I.C. 2114	102976-001	3
N/A	Wire, Solid, 30 AWG, Blue	101617-001	A/R
4L	I.C. 74LS32	105686-001	1

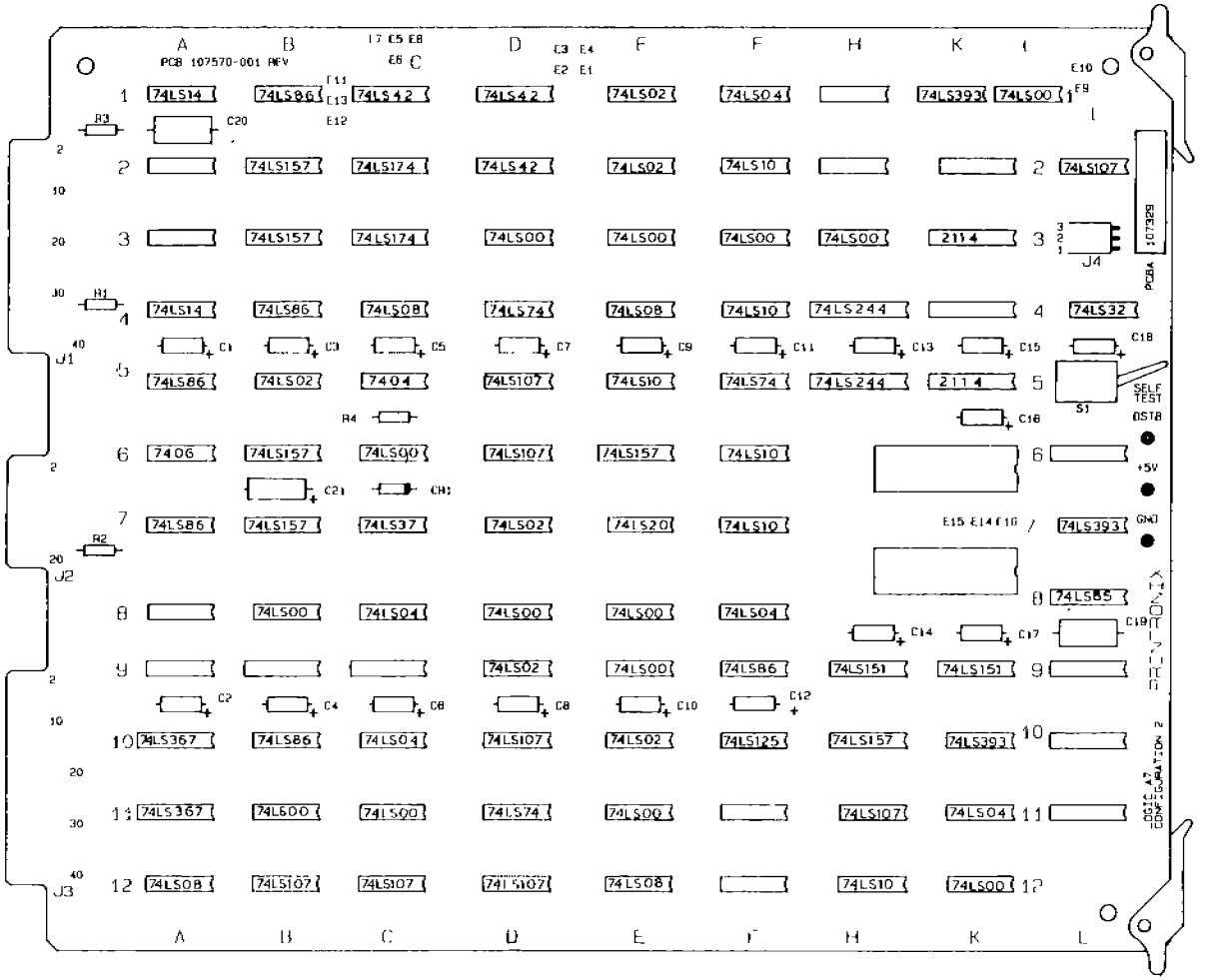

PRINTRONIX

LOGIC A7 PCBA

DRAWING NO.	SHEET NO.
107329 REV A	1 of 1

JUMPER TABLE		LOCATION SHT	LOCATION ZONE
W1	PHASE FIRING ENABLE	7	A7
W2	INVERTED DSTB	3	C3
W3	UNDERLINE DISABLE	8	A3
W4	DATA BIT 8 DISABLE	3	C5
W5	PI DISABLE	3	A7
W6	PRINT LOWER CASE AS UPPERCASE	4	B2
W7	I/O POLARITY	3	B6
W8	SPARE		
W9	HALF DOT PLOT ENABLE	6	C5
W10	9-DOT ROW PRINTING	5	C4
W11	P300	7	C2
W12	AUTOMATIC LINE FEED	4	A3
W13	CR = LF	4	A3
W14	P150	7	C2
W15	HIGH VERTICAL RESOLUTION OPTION ENABLED WHEN NORMAL CHARACTER SET LOCATION, 7K, IS ADDRESSED	4	D2
W16	HIGH VERTICAL RESOLUTION OPTION ENABLED WHEN ALTERNATE CHARACTER SET LOCATION, 8K, IS ADDRESSED	4	D3
W17	DRAFT MODE SELECT	6	D7
W18	COMPRESSED PRINT	6	D7
W19	ALTERNATE COMPRESSED PRINT	7	C3
W20	SPARE		
W21	ESR = 132	4	A5
E1-E2	ELONGATED CHARACTER CODE = 010_8 (NORMAL CODING)	6	C4
E3-E4	SHIFT OUT CODE = 016_8 (NORMAL CODING)	6	C4
E1-E4	SHIFT OUT CODE = 010_8 (CENTRONICS CODING)	6	C4
E2-E3	ELONGATED CHARACTER CODE = 016_8 (CENTRONICS CODING)	6	C4
E5-E6	COMPRESSED PRINT CODE = 03_8	6	C6
E5-E7	COMPRESSED PRINT CODE = 01_8	6	C5/6
E5-E8	COMPRESSED PRINT CODE = 11_8	6	C6
E9-E10	DRAFT MODE CODE = 02_8	6	C6
E11-E12	J3-4 = COMPRESSED PRINT	6	B6
E11-E13	J3-4 = NOBELL	6	B6
E14-E15	ALTERNATE DRAFT FONT	5	B7
E15-E16	2716 ENABLE	5	B7

SPARE CIRCUITS		
DEVICE	LOCATION	OUTPUT PIN
74LS00	3F 3H	6 8, 11
74LS04	1F	4, 6
7404	5C	2
7406	6A	2, 4
74LS08	4E 12A	11 6
74LS32	4L	6, 8, 11
74LS74	11D	(8-9)
74LS86	4B 9F 10B	11 6 6, 8
74LS125	10F	3, 6
1K RESISTOR NETWORK	2A 2H 3A 11F	7, 8, 9 2, 9, 10 6, 11, 12, 13 7, 8, 9 6, 11, 13

I.C. GND / PWR PIN		
DEVICE	GND	+5V
74LS00	7	14
74LS02	7	14
7404	7	14
74LS04	7	14
7408	7	14
74LS08	7	14
74LS10	7	14
74LS14	7	14
74LS20	7	14
74LS32	7	14
74LS37	7	14
74LS42	8	16
74LS74	7	14
74LS85	8	16
74LS86	7	14
74LS107	7	14
74LS125	7	14
74LS151	8	16
74LS157	8	16
74LS174	8	16
74LS244	10	20
74LS367	8	16
74LS393	7	14
74S570	8	16
2114	9	18
2764	14	28
82S126	8	16
1K RESISTOR NETWORK	—	14

CONNECTORS	
J1	INPUT
J2	POWER
J3	8 BOARD TRANSFER
J4	MODE SELECTION

LAST REF DESIG USED	DESIG NOT USED
C21	
CR1	
E18	
R4	
S1	
TP3	

PRINTRONIX

LOGIC A7 SCHEMATIC

DRAWING NO. 107330 REV C

SHEET NO 1 of 8

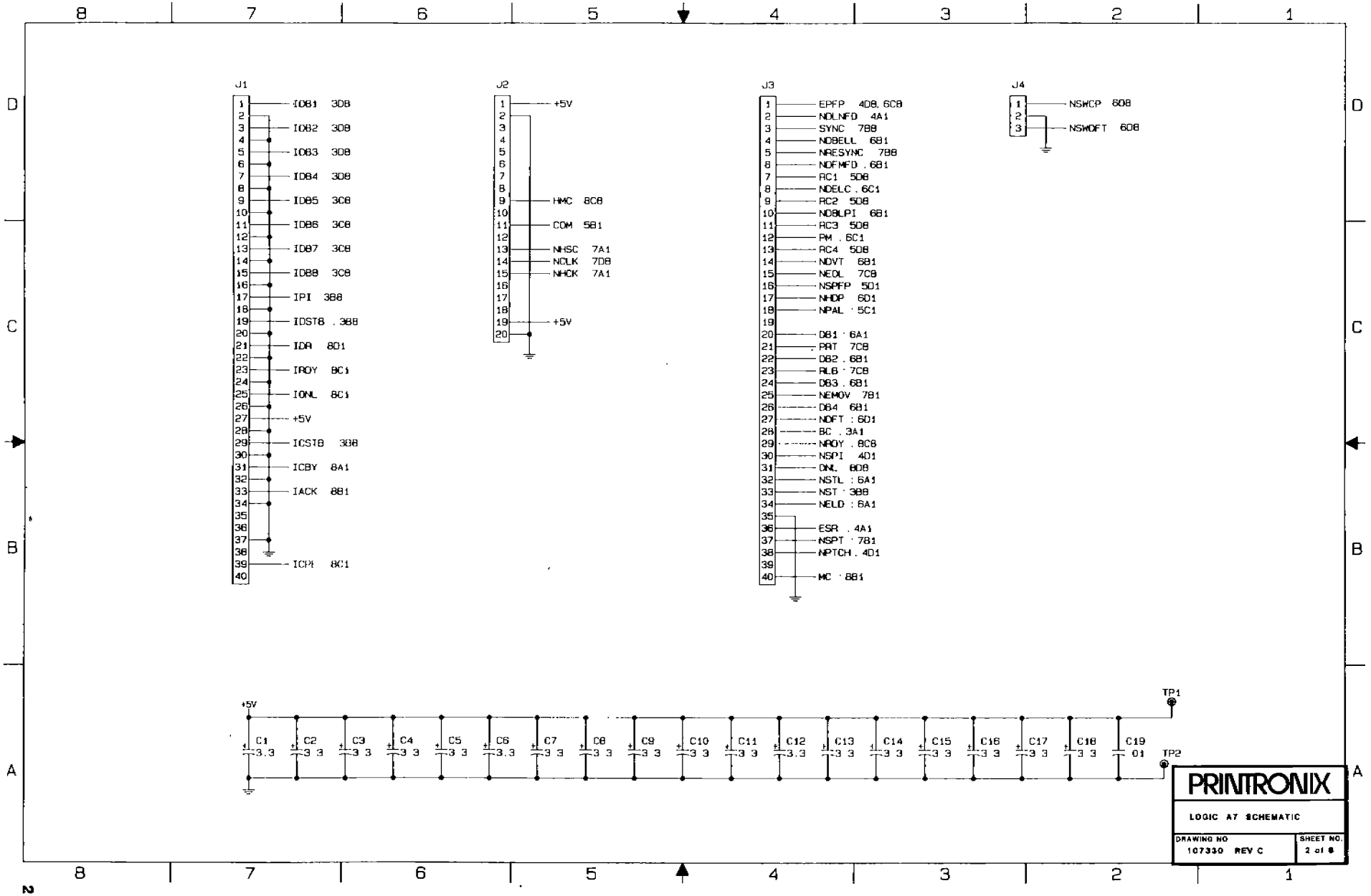
J1
IDB1 3D8
IDB2 3D8
IDB3 3D8
IDB4 3D8
IDB5 3C8
IDB6 3C8
IDB7 3C8
IDB8 3C8
IPI 3B8
IDSTB . 3B8
IDA 8D1
IRDY 8C1
IONL 8C1
+5V
ICSTB 3D8
ICBY 8A1
IACK 8B1
ICPI 8C1
J2
+5V
HMC 8C8
COM 5B1
NHSC 7A1
NCLK 7D8
NHCK 7A1
+5V
J3
EPFP 4D8, 6C8
NDLNFD 4A1
SYNC 7B8
NDBELL 6B1
NRESYNC 7B8
NDFMFD . 6B1
RC1 5D8
NDELC . 6C1
RC2 5D8
NDBLPI 6B1
RC3 5D8
PM . 6C1
RC4 5D8
NDVT 6B1
NEOL 7C8
NSPFP 5D1
NHDP 6D1
NPAL 5C1
DB1 6A1
PRT 7C8
DB2 . 6B1
RLB 7C8
DB3 . 6B1
NEMOV 7B1
DB4 6B1
NDFT 6D1
BC . 3A1
NRDY . 8C8
NSPI 4D1
ONL 8D8
NSTL 6A1
NST 3B8
NELD 6A1
ESR . 4A1
NSPT 7B1
NPTCH . 4D1
MC 8B1
J4
NSWCP 6D8
NSWDFT 6D8
+5V
C1 3.3
C2 3 3
C3 3 3
C4 3 3
C5 3 3
C6 3.3
C7 3 3
C8 3 3
C9 3 3
C10 3 3
C11 3 3
C12 3.3
C13 3 3
C14 3 3
C15 3 3
C16 3 3
C17 3 3
C18 3 3
C19 01
TP1
TP2
PRINTRONIX
LOGIC A7 SCHEMATIC
DRAWING NO
107330 REV C
SHEET NO.
2 of 8

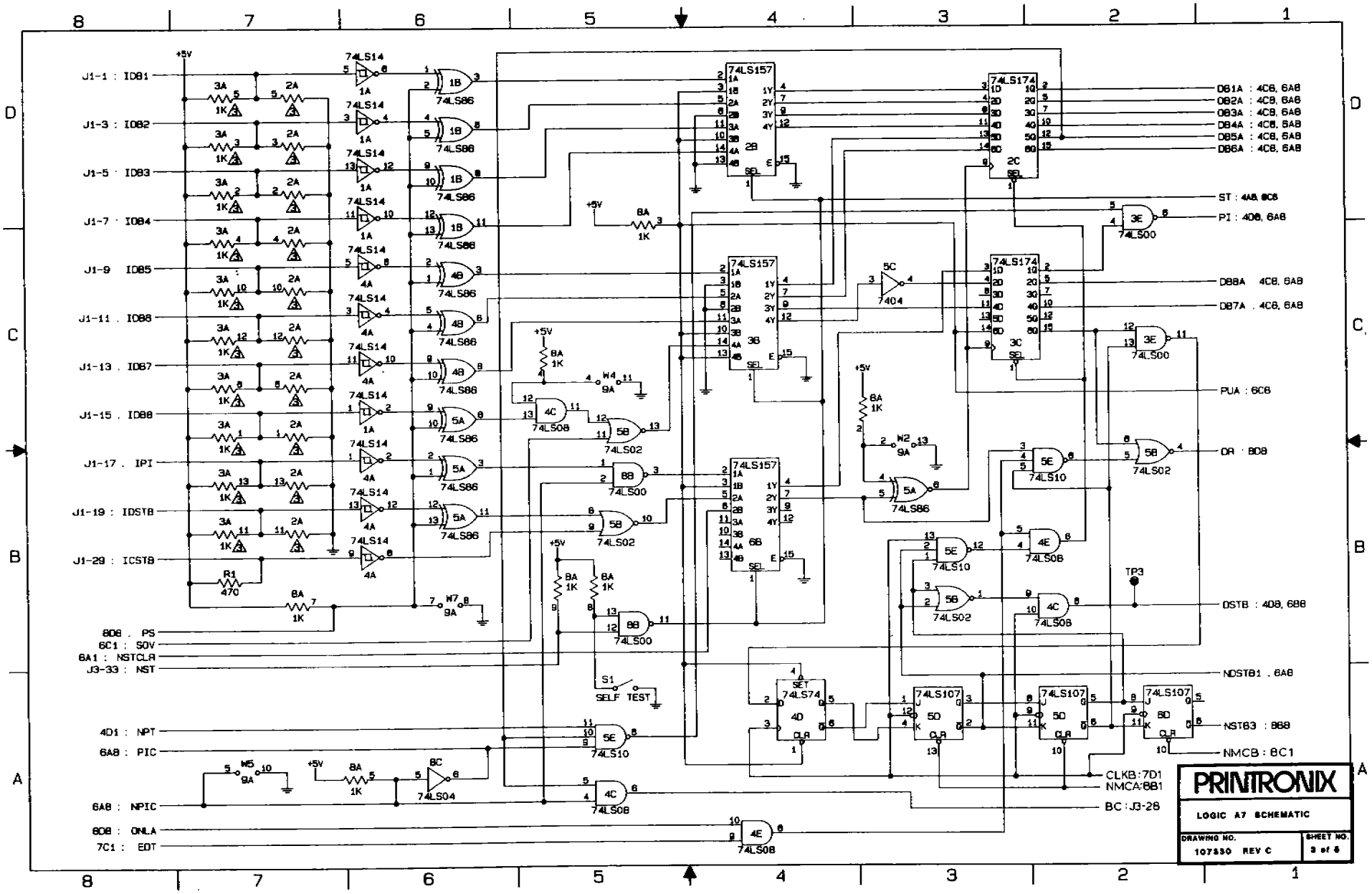
J1-1 : ID81
J1-3 : ID82
J1-5 : ID83
J1-7 : ID84
J1-9 : ID85
J1-11 : ID86
J1-13 : ID87
J1-15 : ID88
J1-17 : IPI
J1-19 : IDSTB
J1-29 : ICSTB
8D8 : PS
6C1 : SOV
6A1 : NSTCLR
J3-33 : NST
4D1 : NPT
6A8 : PIC
6A8 : NPIC
8D8 : ONLA
7C1 : EDT
D81A : 4C8, 6A8
D82A : 4C8, 6A8
D83A : 4C8, 6A8
D84A : 4C8, 6A8
D85A : 4C8, 6A8
D86A : 4C8, 6A8
ST : 4A8, 8C8
PI : 4D8, 6A8
D88A 4C8, 6A8
D87A . 4C8, 6A8
PUA : 6C8
DR : 8D8
DSTB : 4D8, 6B8
NDSTB1 . 6A8
NSTB3 : 8B8
NMCB : 8C1
CLKB:7D1
NMCA:8B1
BC:J3-28
SELF TEST
TP3
PRINTRONIX
LOGIC A7 SCHEMATIC
DRAWING NO. 107330 REV C
SHEET NO. 3 of 6

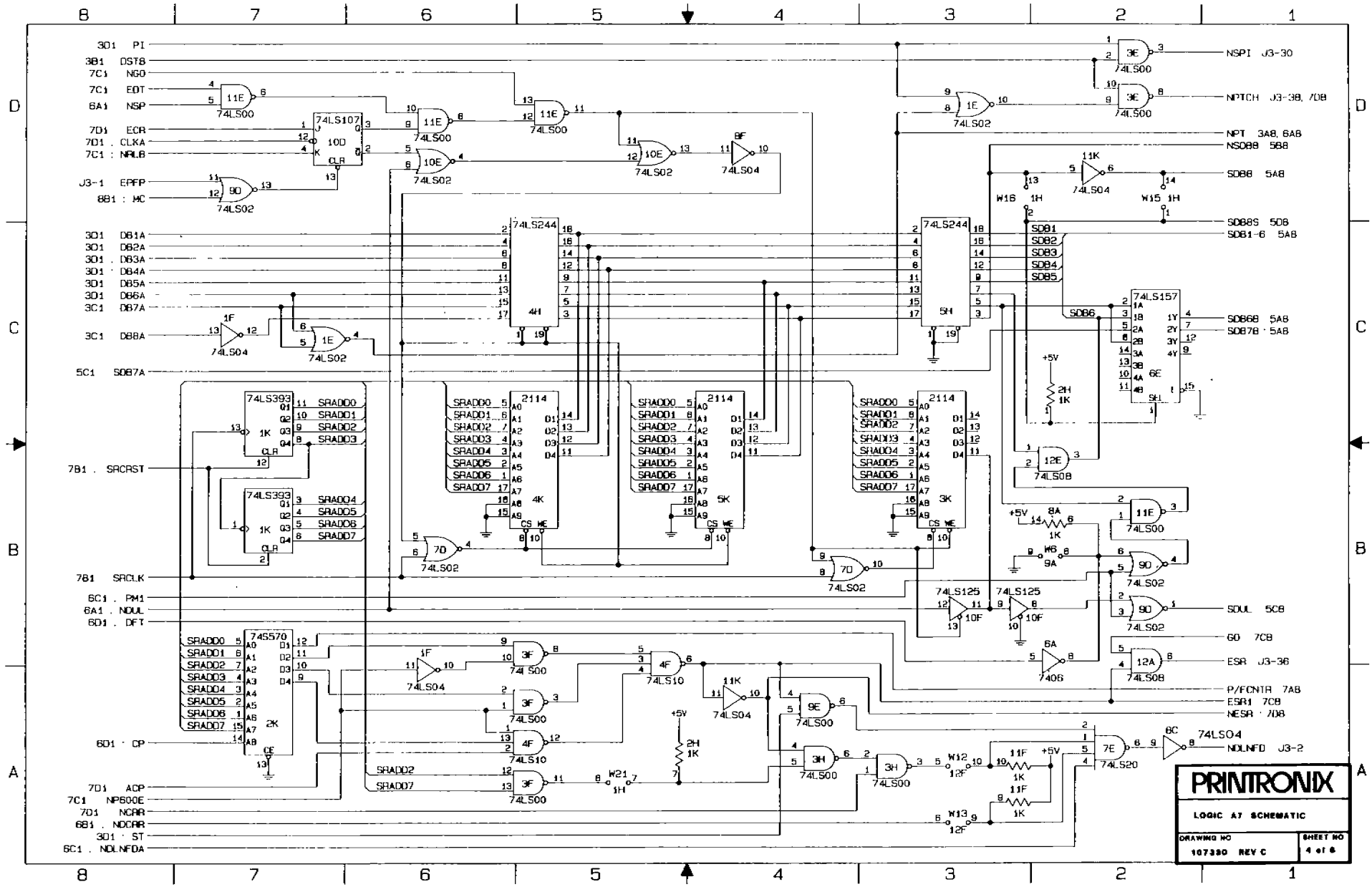
PRINTRONIX
LOGIC A7 SCHEMATIC
DRAWING NO
107330 REV C
SHEET NO
4 of 6
3D1 PI
3B1 DST8
7C1 NGO
7C1 EDT
6A1 NSP
7D1 ECR
7D1 . CLKA
7C1 : NRLB
J3-1 EPFP
8B1 : MC
3D1 DB1A
3D1 DB2A
3D1 . DB3A
3D1 DB4A
3D1 DB5A
3D1 DB6A
3C1 DB7A
3C1 DB8A
5C1 SDB7A
7B1 . SRCRST
7B1 SRCLK
6C1 . PM1
6A1 . NDUL
6D1 . DFT
6D1 . CP
7D1 ACP
7C1 NP600E
7D1 NCRR
6B1 . NDCRR
3D1 . ST
6C1 . NDLNFDA
NSPI J3-30
NPTCH J3-38, 7D8
NPT 3A8, 6A8
NSDB8 5B8
SDB8 5A8
SDB8S 5D8
SDB1-6 5A8
SDB6B 5A8
SDB7B 5A8
SDUL 5C8
GO 7C8
ESR J3-36
P/FCNTR 7A8
ESR1 7C8
NESR 7D8
NDLNFD J3-2
74LS107
74LS244
74LS157
74LS393
74S570
2114
74LS125
74LS04
74LS00
74LS02
74LS08
74LS10
74LS20
7406

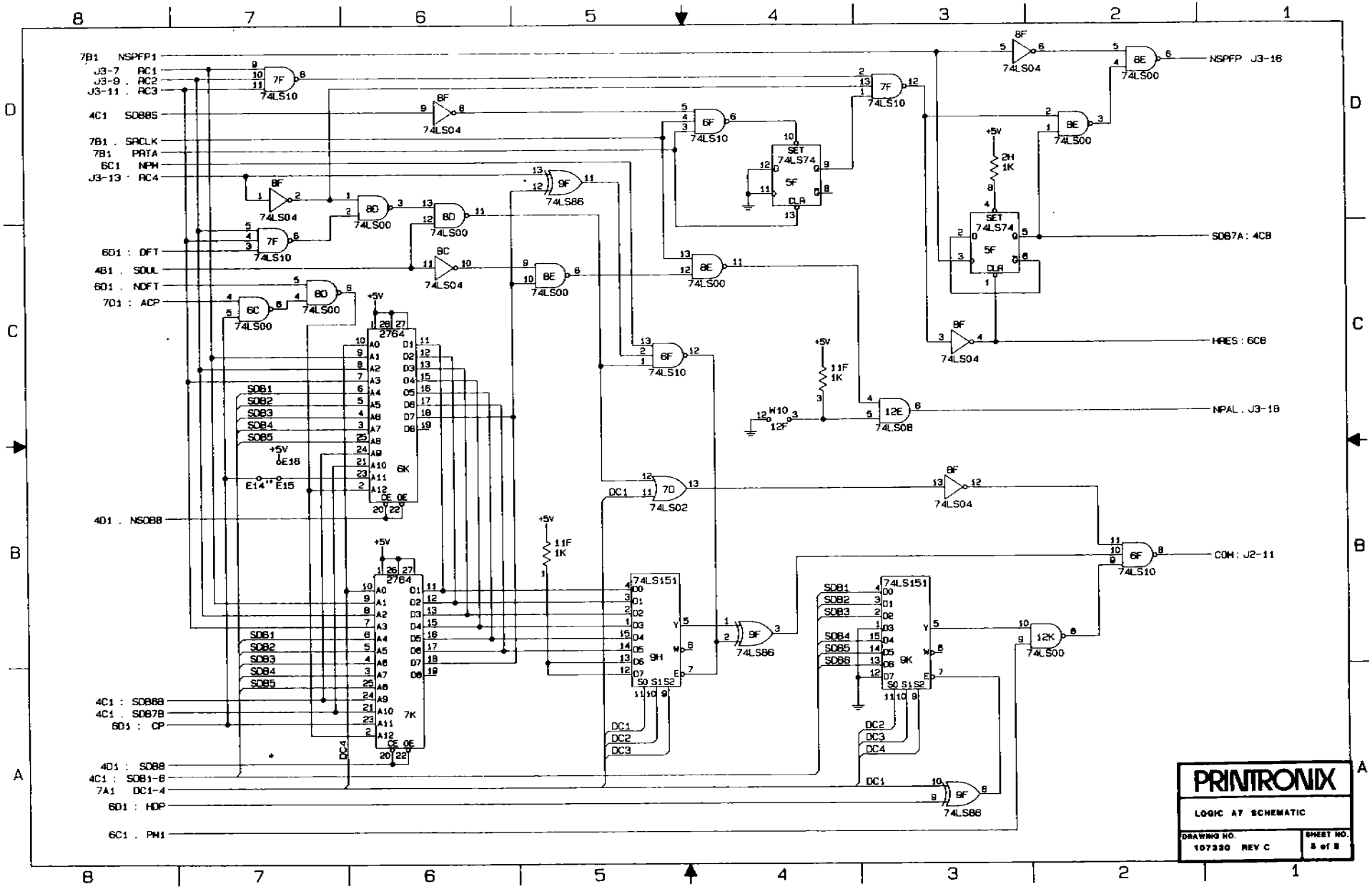
7B1 NSPFP1
J3-7 RC1
J3-9 RC2
J3-11 RC3
4C1 SDBBS
7B1 SRCLK
7B1 PRTA
6C1 NPM
J3-13 RC4
6D1 : DFT
4B1 SDUL
6D1 NDFT
7D1 : ACP
4D1 NSDBB
4C1 : SDBBB
4C1 SDB7B
6D1 : CP
4D1 : SDBB
4C1 : SDB1-8
7A1 DC1-4
6D1 : HOP
6C1 PH1
NSPFP J3-16
SDB7A : 4CB
HRES : 6CB
NPAL J3-18
COM : J2-11
74LS10
74LS04
74LS00
74LS74
74LS86
74LS02
74LS08
74LS151
2764
PRINTRONIX
LOGIC A7 SCHEMATIC
DRAWING NO. 107330 REV C
SHEET NO. 5 of 8

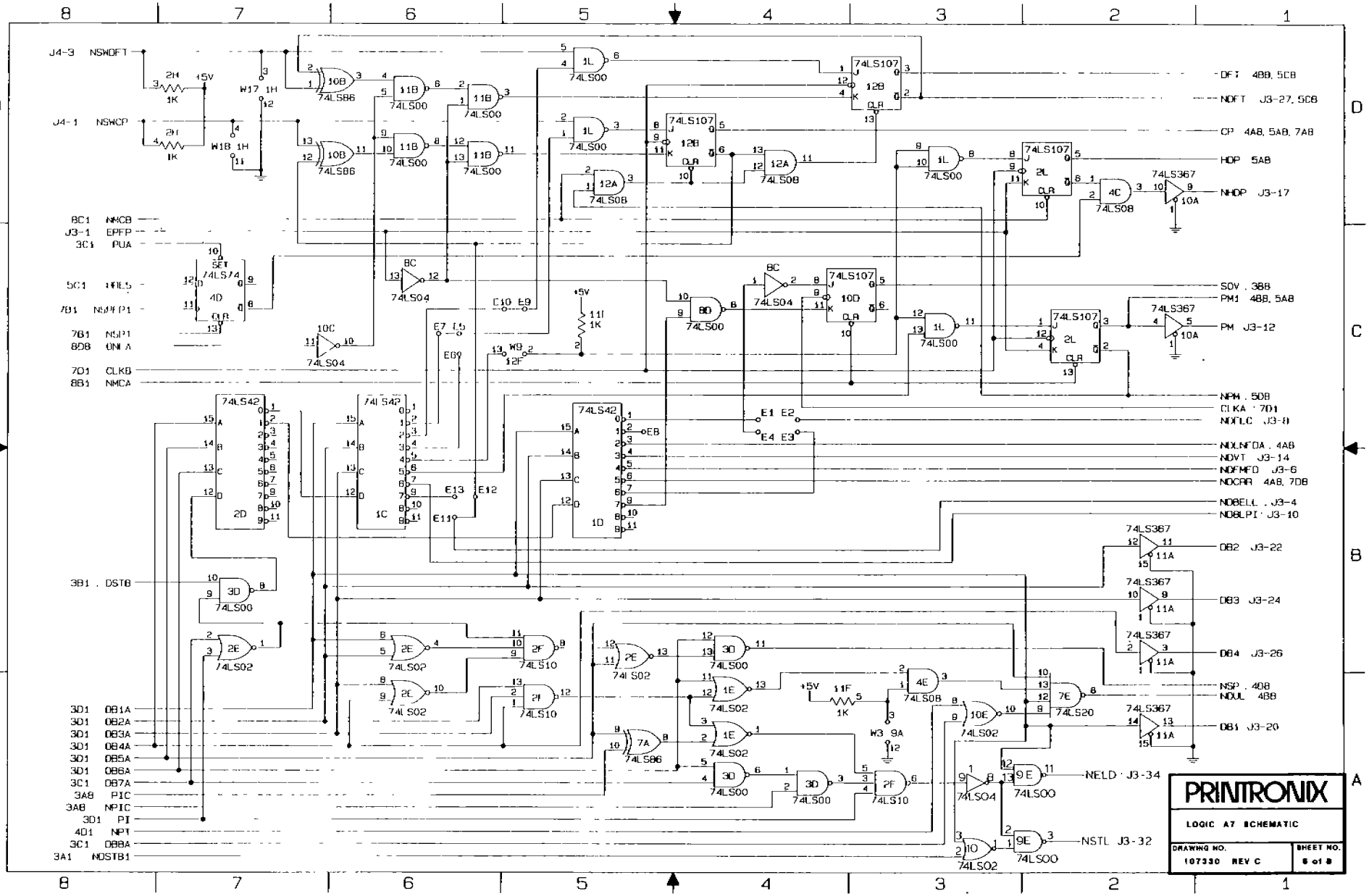
J4-3 NSWOFT
J4-1 NSWCP
2H 1K +5V
2H 1K
W17 1H
W18 1H
74LS86
74LS00
74LS107
74LS08
74LS04
74LS367
74LS42
74LS02
74LS10
74LS20
DFT 4BB, 5CB
NOFT J3-27, 5CB
CP 4AB, 5AB, 7AB
HOP 5AB
NHOP J3-17
SOV . 3BB
PM1 4BB, 5AB
PM J3-12
NPM . 5DB
CLKA · 7D1
NOFLC J3-8
NOLNFDA . 4AB
NOVT J3-14
NOFMFD J3-6
NOCRR 4AB, 7DB
NOBELL . J3-4
NOBLPI · J3-10
DB2 J3-22
DB3 J3-24
DB4 J3-26
NSP . 4DB
NDUL 4BB
DB1 J3-20
NELD · J3-34
NSTL J3-32
3B1 . DSTB
3D1 DB1A
3D1 DB2A
3D1 DB3A
3D1 DB4A
3D1 DB5A
3D1 DB6A
3C1 DB7A
3A8 PIC
3A8 NPIC
3D1 PI
4D1 NPT
3C1 DBBA
3A1 NOSTB1
PRINTRONIX
LOGIC A7 SCHEMATIC
DRAWING NO. 107330 REV C
SHEET NO. 5 of 8

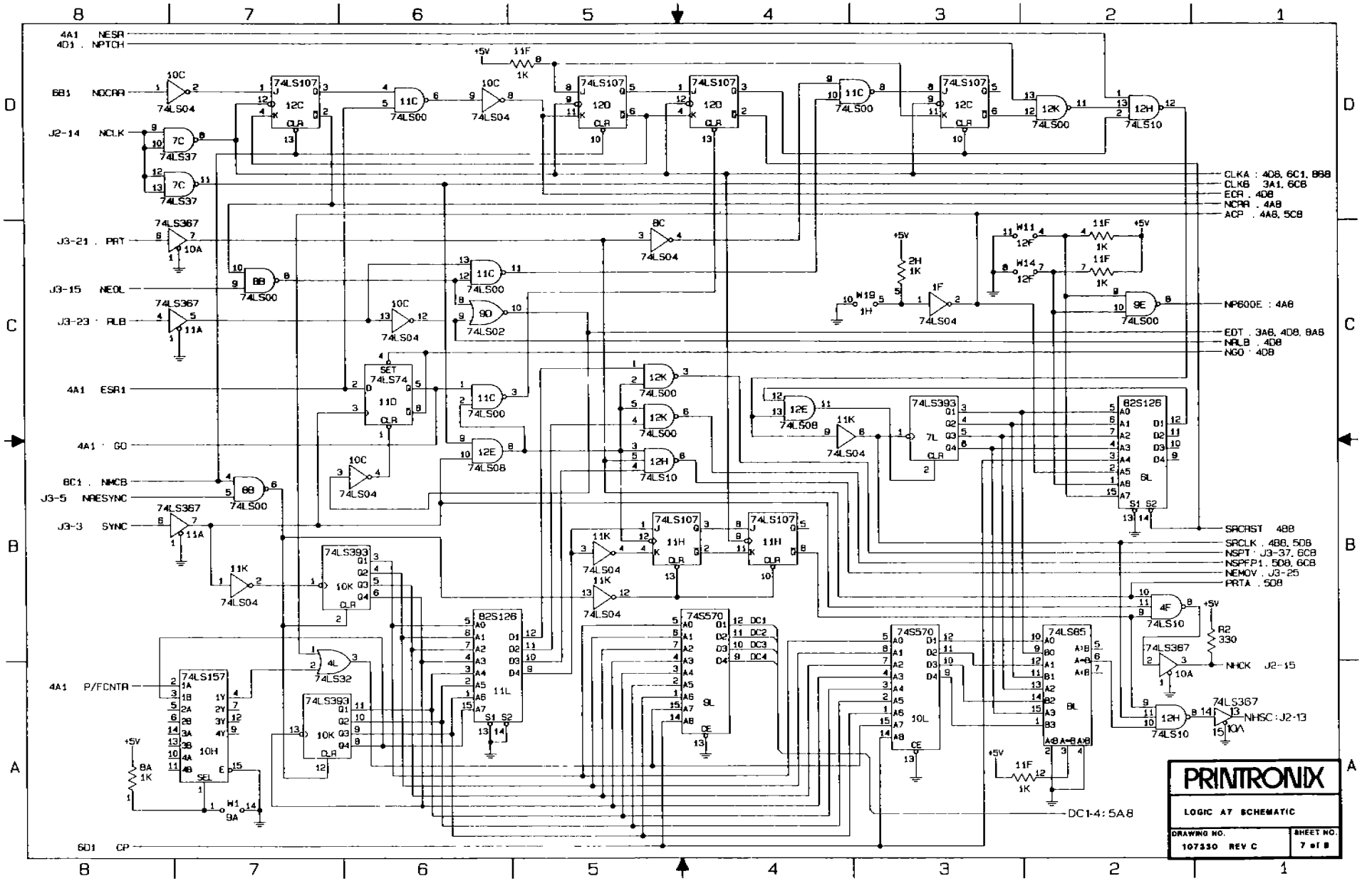
4A1 NESR
4D1 NPTCH
6B1 NDCRA
J2-14 NCLK
J3-21 PRT
J3-15 NEOL
J3-23 RLB
4A1 ESR1
4A1 GO
8C1 NMCB
J3-5 NRESYNC
J3-3 SYNC
4A1 P/FCNTR
6D1 CP
CLKA : 4D8, 6C1, 8B8
CLKB 3A1, 6C8
ECR . 4D8
NCRA . 4A8
ACP . 4A8, 5C8
NP600E : 4A8
EDT . 3A8, 4D8, 8A8
NRLB . 4D8
NGO 4D8
SRCRST 4B8
SRCLK . 4B8, 5D8
NSPT J3-37, 6C8
NSPFP1 . 5D8, 6C8
NEMOV . J3-25
PRTA . 5D8
NHCK J2-15
NHSC : J2-13
DC1-4 : 5A8
74LS107
74LS00
74LS04
74LS37
74LS367
74LS10
74LS74
74LS02
74LS08
74LS393
82S126
74LS157
74LS32
74S570
74LS85
PRINTRONIX
LOGIC A7 SCHEMATIC
DRAWING NO. 107330 REV C
SHEET NO. 7 of 8

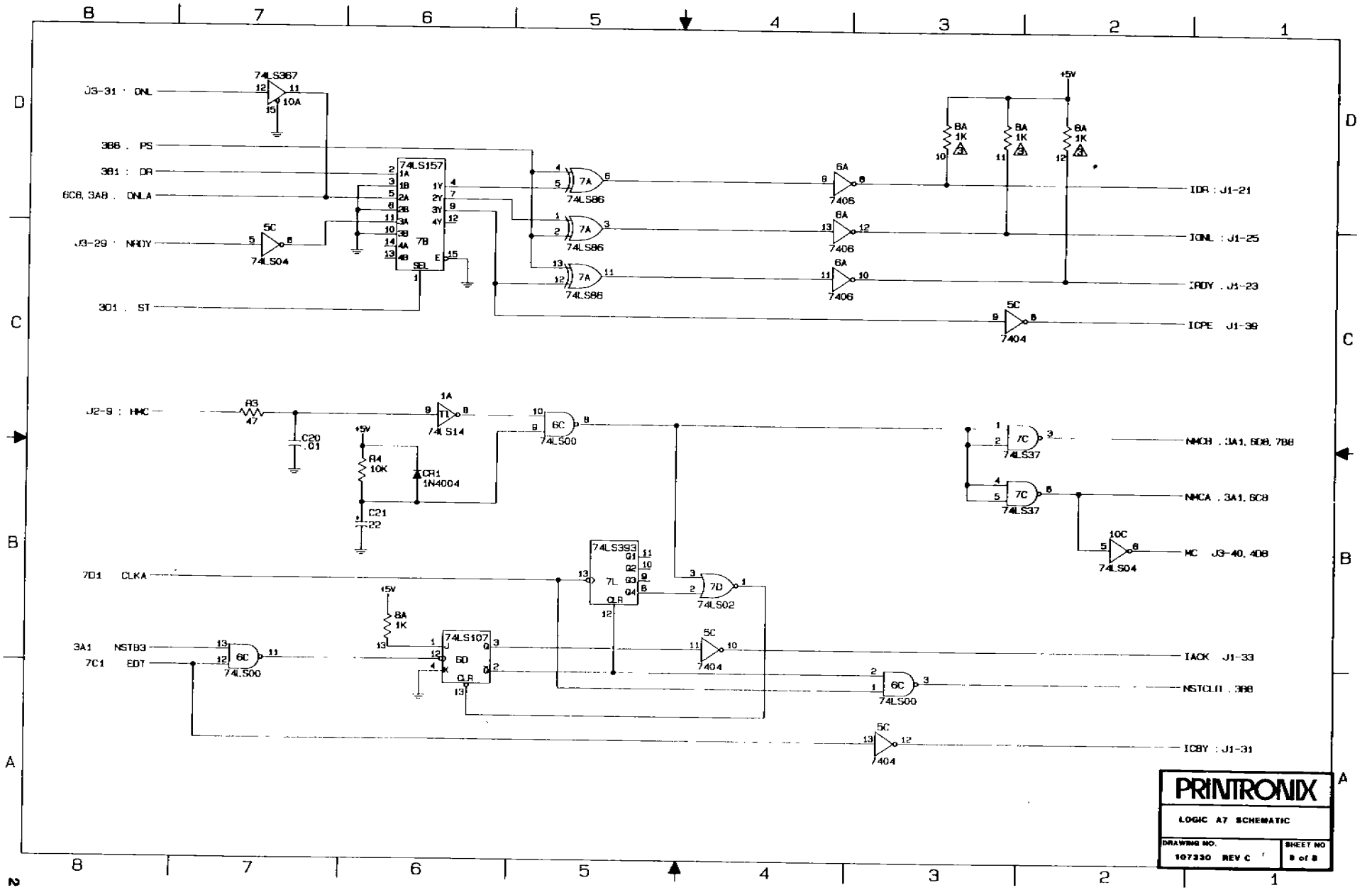
J3-31 : ONL
74LS367
10A
3B8 . PS
3B1 : DR
6C8, 3A8 . ONLA
J3-29 : NRDY
5C
74LS04
3D1 . ST
74LS157
7B
SEL
7A
74LS86
6A
7406
8A
1K
+5V
IDR : J1-21
IONL : J1-25
IRDY . J1-23
5C
7404
ICPE J1-39
J2-9 : NMC
R3
47
C20
.01
1A
74LS14
6C
74LS00
R4
10K
CR1
1N4004
C21
22
7C
74LS37
NMCB . 3A1, 6D8, 7B8
NMCA . 3A1, 6C8
10C
74LS04
MC J3-40, 4D8
7D1 CLKA
74LS393
7L
CLR
7D
74LS02
3A1 NSTB3
7C1 EDT
74LS107
6D
IACK J1-33
NSTCLR . 3B8
ICBY : J1-31
PRINTRONIX
LOGIC A7 SCHEMATIC
DRAWING NO.
107330 REV C
SHEET NO
8 of 8

6.0 DRAWINGS

6.10 LOGIC B4 PCBA
PART NUMBER 102360 REV U

REFERENCE DESIGNATOR	DESCRIPTION	PART NUMBER	QTY
C1-C11 C14-C16	Capacitor, 15V, 20%, 3.3uf	101362-001	14
C12,C13	Capacitor, 200V, 20%, .01uf	101363-001	2
C17	Capacitor, 100V, 470pf	102291-472	1
C18-C29	Capacitor, 50V, 20%, 1uf	102233-001	3
CR1	Diode, IN5349B 12V 5W	101371-001	1
R1,R7,R9,R10, R14	Resistor, ¼W, 270 ohm, 5%	101337-272	5
R2-R5,R13	Resistor, ¼W, 27 ohm, 5%	101337-271	5
R6	Resistor, 2W, 330 ohm 5%	101421-332	1
R8,R11	Resistor, ¼W, 470 ohm, 5%	101337-472	2
R12	Resistor, ¼W, 15K, 5%	101337-154	1
R15-R17	Resistor, ¼W, 1K, 5%	101337-103	3
1A,4BA,4BB	I.C. 75452	101356-001	3
1B,8B,6C,3E,8F, 10K	I.C. 7404	101340-001	6
2H,9H,10H,11C, 1D,7D,10D,2F, 5F,7F	I.C. 74393	101355-001	10
10C,9D,1E,4F,7H	I.C. 7410	101342-001	5
2C,2D,1F,1H	I.C. 74LS85	102303-001	4
1K,11A,5B,9B, 3D,5D,8D,11D, 11H,6F,3H,5H, 8H,6K,2B,11B, 5K	I.C. 7400	101338-001	17
2A,9K	I.C. Resistor Network 1K	101381-102	2
6B,9C,4D,6D,2E, 6E,7K,3K	I.C. 7402	101339-001	8
5A,2K,4K,11E, 6H,3F,9E,8C, 10B,8E,4H,6A, 5C	I.C. 74LS107	102302-001	13
3A	I.C. 7414	101343-001	1
7B,5E,7C,3B	I.C. 74107	101349-001	4
3C	I.C. 74174	101353-001	1
9A,4E,7E,10E	I.C. 7420	101344-001	4
7A	I.C. 7406	101341-001	1

6.0 DRAWINGS

6.10 LOGIC B4 PCBA (Continued)
PART NUMBER 102360 REV U

REFERENCE DESIGNATOR	DESCRIPTION	PART NUMBER	QTY
Y1	Crystal, 10 MHz	101375-001	1
ICA, ICB	I.C. TMS, 3129	101357-001	2
BK	Socket I.C. 14 Pin	101384-001	1
N/A	Injector 25607	101382-001	2
N/A	Teflon Tubing	101621-004	8"
N/A	Teflon Tubing	101621-001	1"
N/A	Pin, Roll	101319-010	2
N/A	Wire, Solid #30, Blue	101617-001	A/R
GND +5V -23V	Terminal, Terret	101380-001	4
RESYNC			
REF	PCB Logic By Schematic	102363-001	N/A

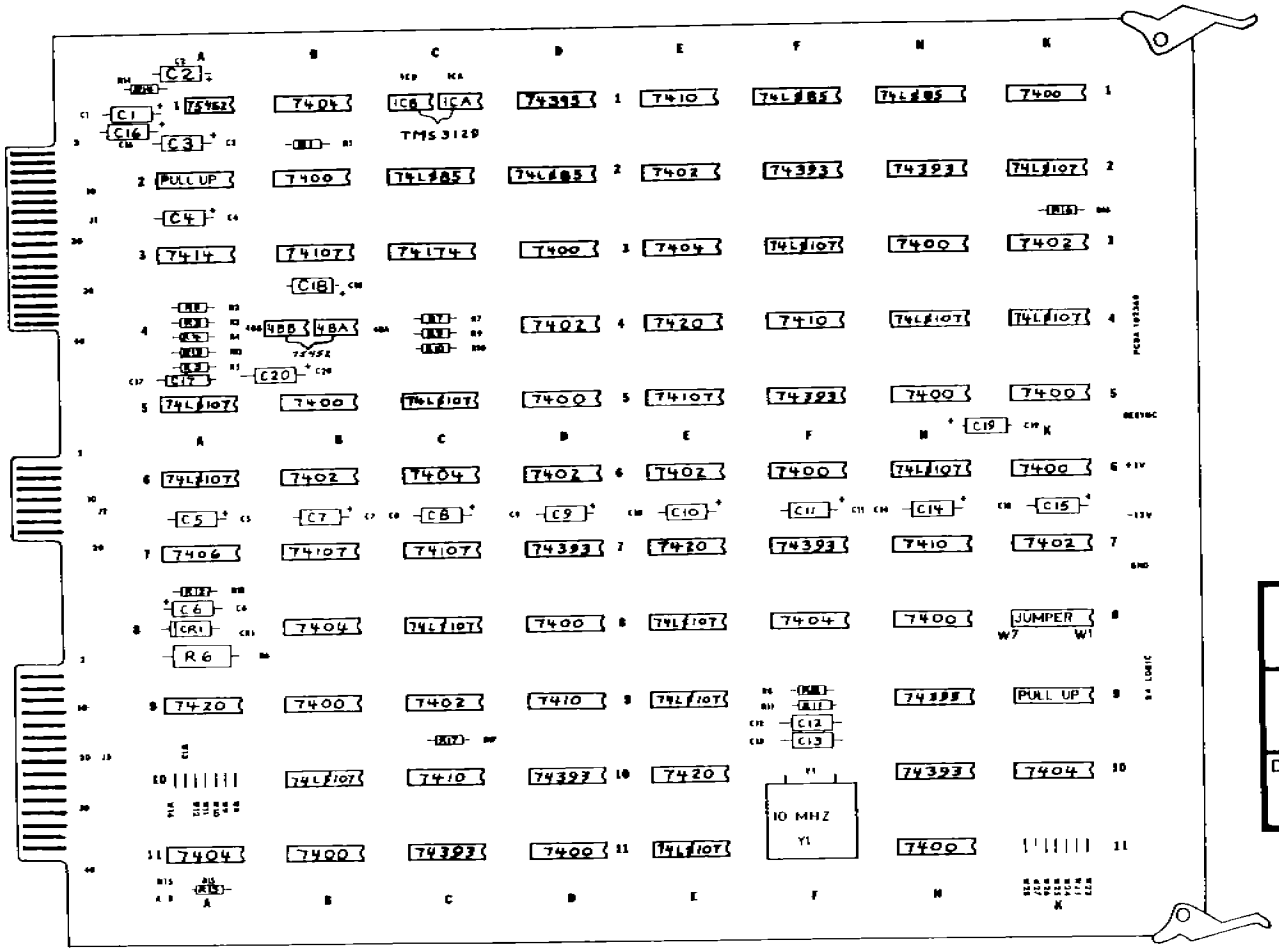

PRINTRONIX

LOGIC B4 PCBA

DRAWING NO.	SHEET NO.
102360 REV U	1 of 1

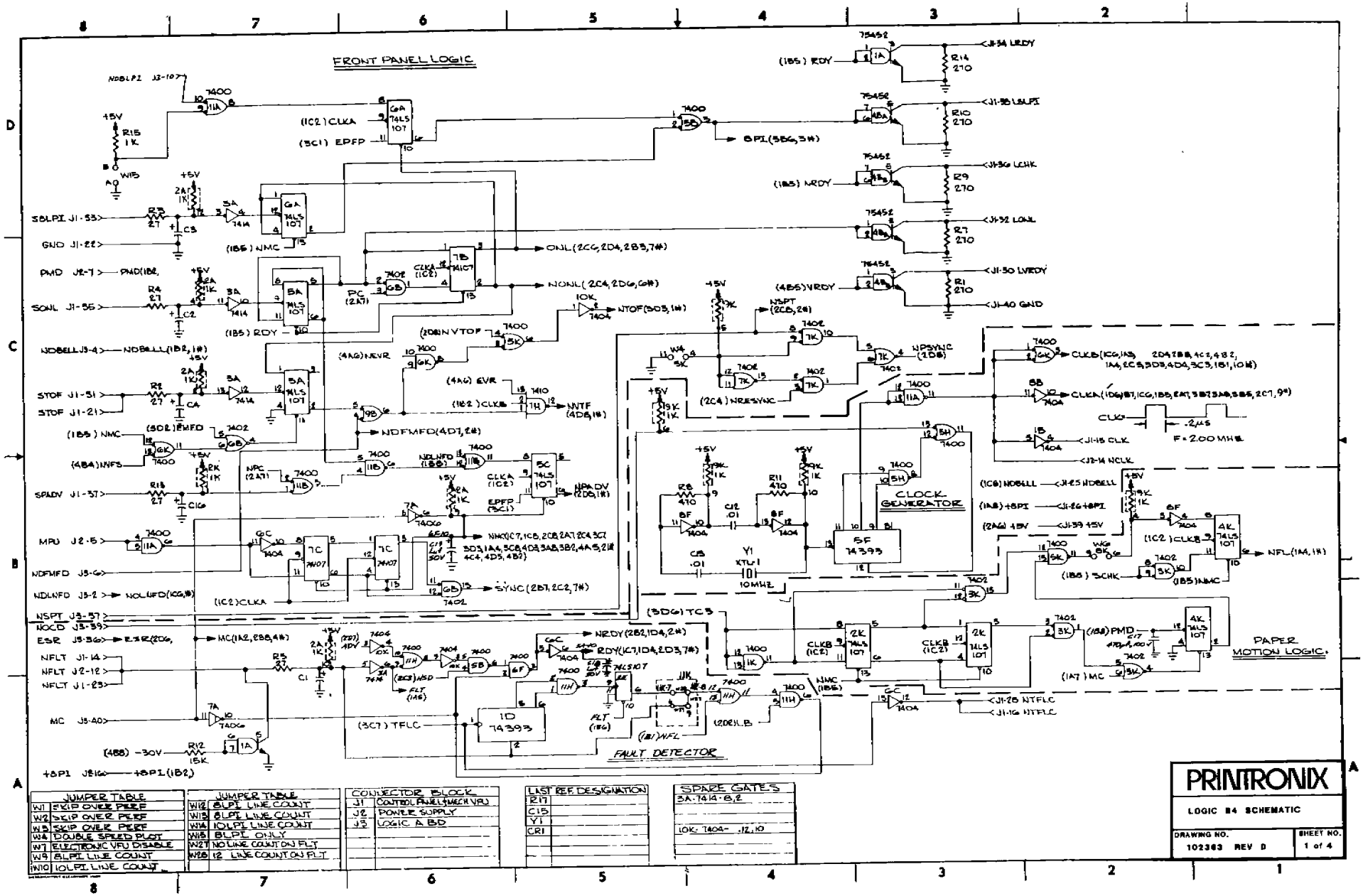
FRONT PANEL LOGIC
CLOCK GENERATOR
PAPER MOTION LOGIC
FAULT DETECTOR
PRINTRONIX
LOGIC B4 SCHEMATIC
DRAWING NO. 102363 REV D
SHEET NO. 1 of 4
JUMPER TABLE
W1 SKIP OVER PERF
W2 SKIP OVER PERF
W3 SKIP OVER PERF
W4 DOUBLE SPEED PLOT
W7 ELECTRONIC VFU DISABLE
W9 8LPI LINE COUNT
W10 10LPI LINE COUNT
JUMPER TABLE
W12 8LPI LINE COUNT
W13 8LPI LINE COUNT
W14 10LPI LINE COUNT
W15 8LPI ONLY
W27 NO LINE COUNT ON FLT
W28 12 LINE COUNT ON FLT
CONNECTOR BLOCK
J1 CONTROL PANEL & MECH VFU
J2 POWER SUPPLY
J3 LOGIC A BD
LAST REF. DESIGNATION
R17
C15
Y1
CR1
SPARE GATES
3A-7414-8,2
10K: 7404- 12,10

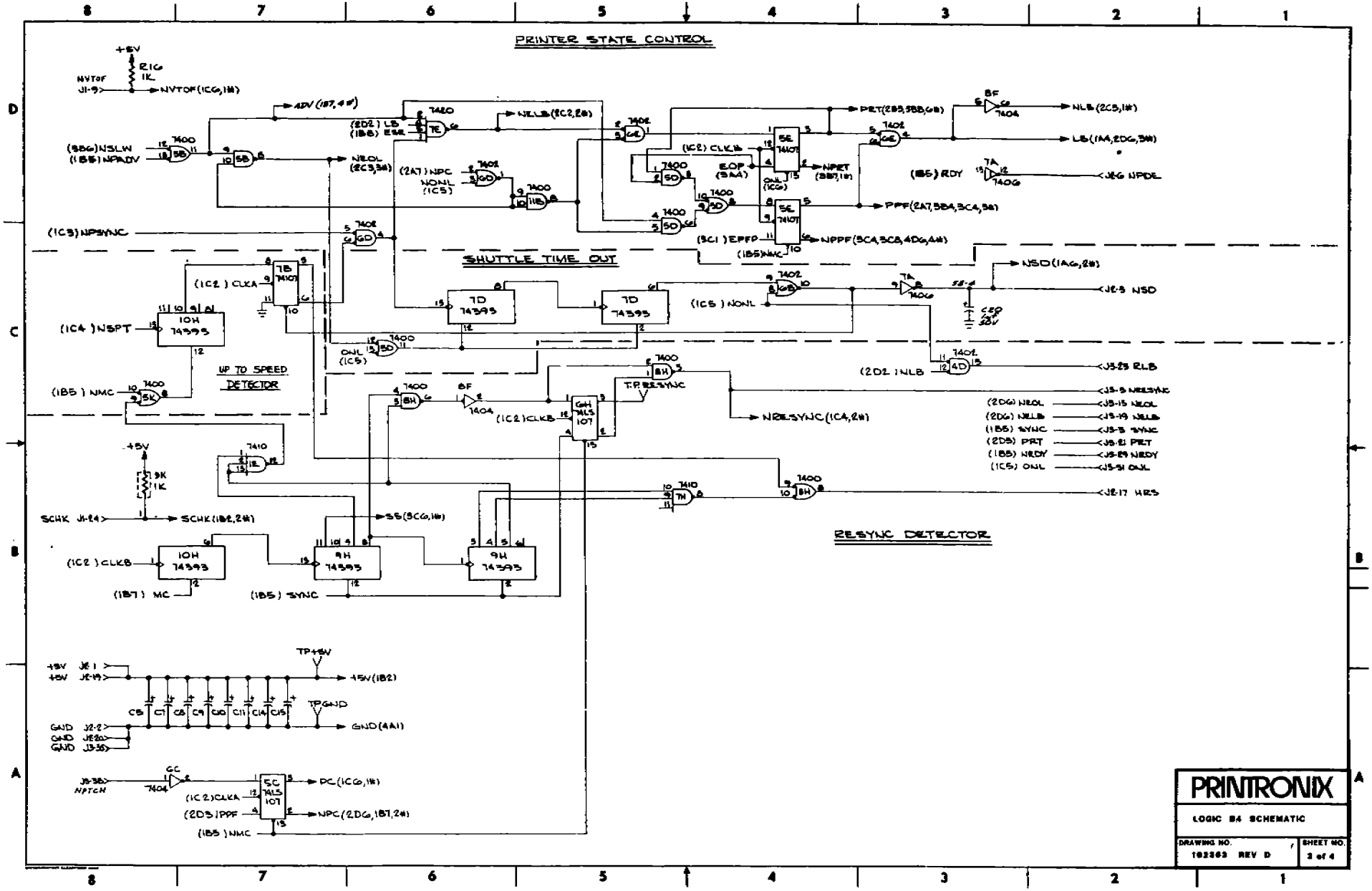
PRINTER STATE CONTROL
SHUTTLE TIME OUT
UP TO SPEED DETECTOR
RESYNC DETECTOR
PRINTRONIX
LOGIC B4 SCHEMATIC
DRAWING NO. 102363 REV D
SHEET NO. 2 of 4

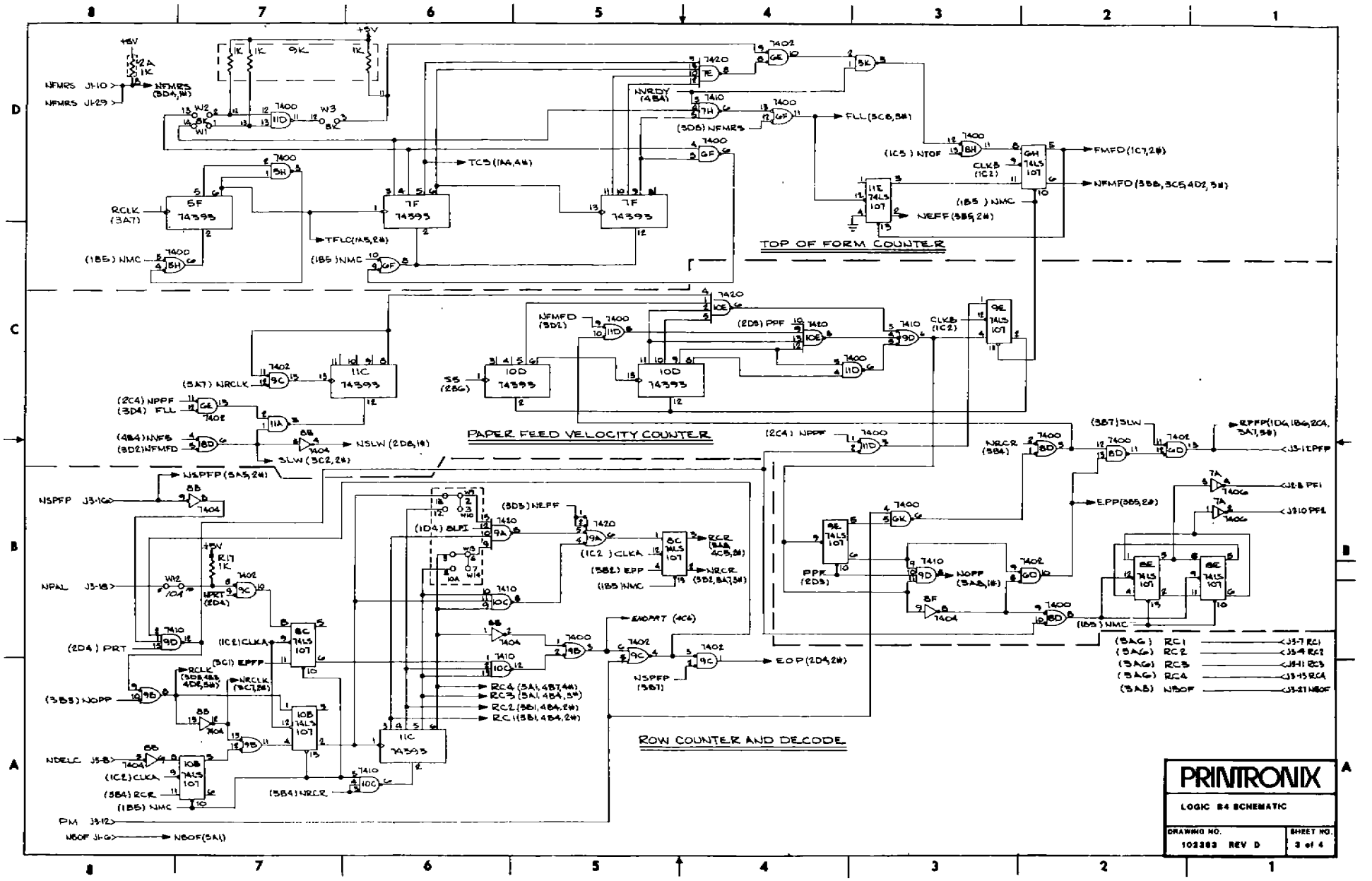
TOP OF FORM COUNTER
PAPER FEED VELOCITY COUNTER
ROW COUNTER AND DECODE
PRINTRONIX
LOGIC B4 SCHEMATIC
DRAWING NO. 103383 REV D
SHEET NO. 3 of 4

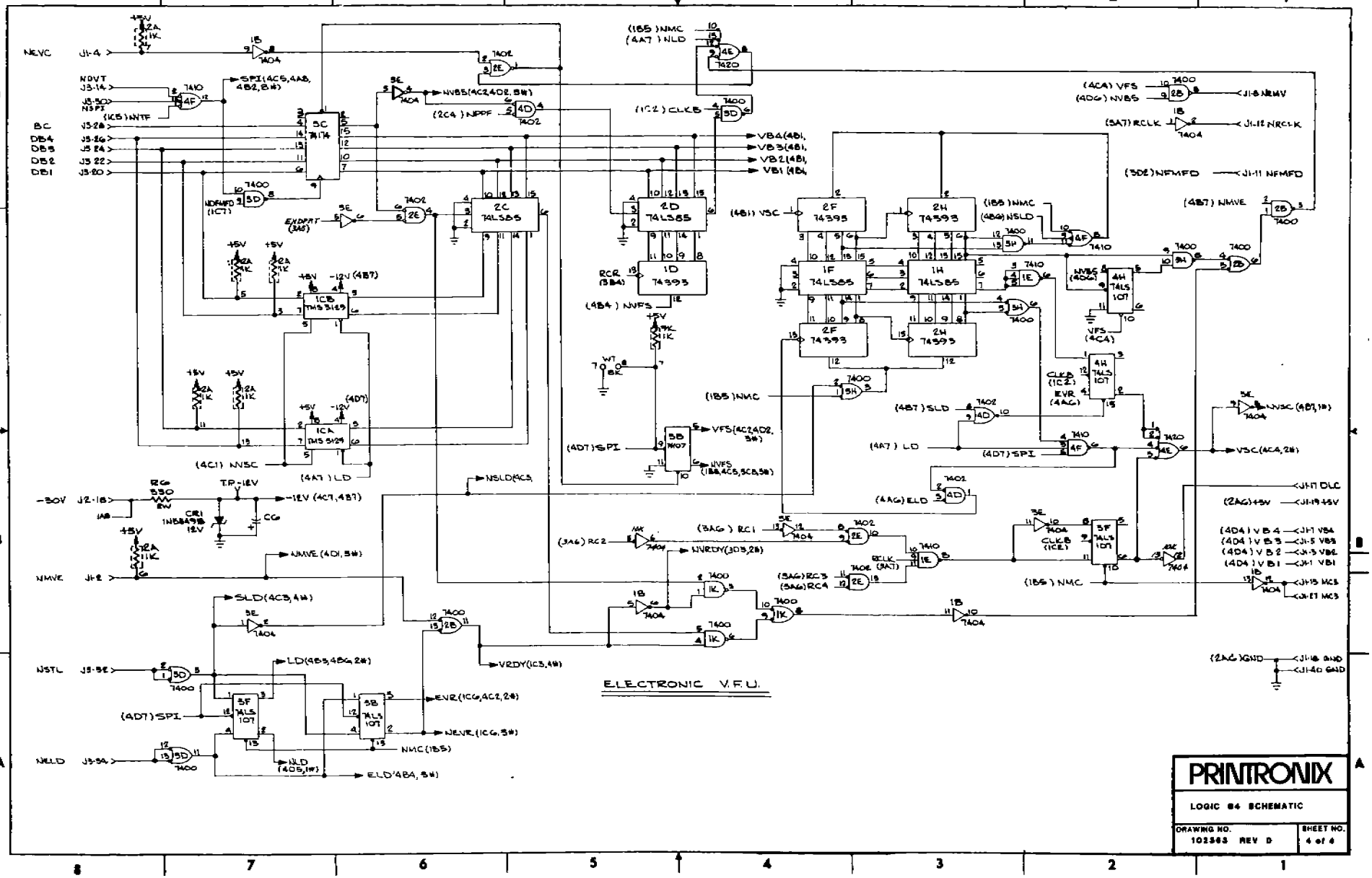
ELECTRONIC V.F.U.
PRINTRONIX
LOGIC 84 SCHEMATIC
DRAWING NO. 102363 REV D
SHEET NO. 4 of 4

6.0 DRAWINGS

6.11 LOGIC B7 PCBA
PART NUMBER 103830 REV V

REFERENCE DESIGNATOR	DESCRIPTION	PART NUMBER	QTY
C1-C5, C7, C12, C13	Capacitor, 100V, 220pf	102291-222	8
C6, C8, C9, C11, C14-C17, C19, C21, C23-C28, C30-C33, C36, C37	Capacitor, 15V, 20%, 3.3ufd	101362-001	22
C10	Capacitor, Tantalium, 15V, ± 20%, 22uf	101362-005	1
C18, C20, C22, C29	Capacitor, 50V, 20%, 1ufd	102233-001	4
C34, C34	Capacitor, 200V, 20%, .01ufd	101363-001	2
CR1	Diode IN5349B	101371-001	1
R1-R6, R8, R9, R14, R15	Resistor, 27 ohm	101337-271	10
R11, R17-R20	Resistor, 270 ohm	101337-272	5
R7, R10	Resistor, 47 ohm	101337-471	2
R24, R25	Resistor, 470 ohm	101337-472	2
R12	Resistor, ¼W, 15K, 5%	101337-154	1
R16	Resistor, 2W, 330 ohm, 5%	101421-332	1
R21-R23	Resistor, ¼W, 1K, 5%	101337-103	3
R13	Resistor, ¼W, 150 ohm, 5%	101337-152	1
Y1	XTL-10 MHz	101375-001	1
12A, 5B, 1C, 10C, 1D, 11D, 3E, 4E, 9E, 10E, 7F, 1H, 2H, 7H, 6K, 3L, 9L	I.C. 7400	101338-001	17
1B, 10B, 6C, 1E, 12E, 7E, 11E, 4K, 5L, 8L	I.C. 7402	101339-001	10
11A, 2D, 4D, 10D, 5F, 11F, 4H	I.C. 7404	101340-001	7
5A, 10F	I.C. 7406	101341-001	2
10A, 4C, 12C, 8F 3H, 9H	I.C. 7410	101342-001	6
3B, 7B, 1F	I.C. 7414	101343-001	3
7D, 12D, 12E, 9F, 3K, 7K	I.C. 7420	101344-001	6
5K	I.C. 7486	101348-001	1

6.0 DRAWINGS

6.11 LOGIC B7 PCBA (Continued)
PART NUMBER 103830 REV V

REFERENCE DESIGNATOR	DESCRIPTION	PART NUMBER	QTY
2B, 6B, 11B, 2C, 5C, 7C, 11C, 4L, 3D, 5D, 2E, 8E, 12F, 5H, 10H, 10K, 2K	I.C. 74107	101349-001	18
9B	I.C. 74174	101353-001	1
12B, 8D, 6E, 2F, 3F, 4F, 6F, 8H, 6L, 7L	I.C. 74393	101355-001	10
6A, 4BA, 4BB	I.C. 75452	101356-001	3
8BA, 8BB	I.C. TMS 3129	101357-001	2
9C, 6D, 9D, 6H	I.C. 7485	101347-001	4
4A, 9A, 10L	I.C. Resistor PK 1K	101381-102	3
8K, 9K	I.C. Socket 14 Pin	101384-001	2
8C	I.C. 7407 Hex Buffer	102294-001	1
1K	I.C. 7408 and -2 INPUT	104240-001	1
11L, 2L	I.C. Socket 16 Pin	101385-001	2
Install Loc 8K	Assembly, Jumper Platform	102541-002	1
Install Loc 9K	Assembly, Jumper Platform	102541-010	1
+5V GND -12V	Terminal, Turret	101380-001	4
N/A	Epoxy, 5 Minute	101549-001	A/R
N/A	PCB B7 Logic	104014-001	1
N/A	PCB Logic B7 Schematic	104118-000	REF
N/A	Injector/Ejector	101382-001	2
N/A	Pin, Roll	101319-001	2

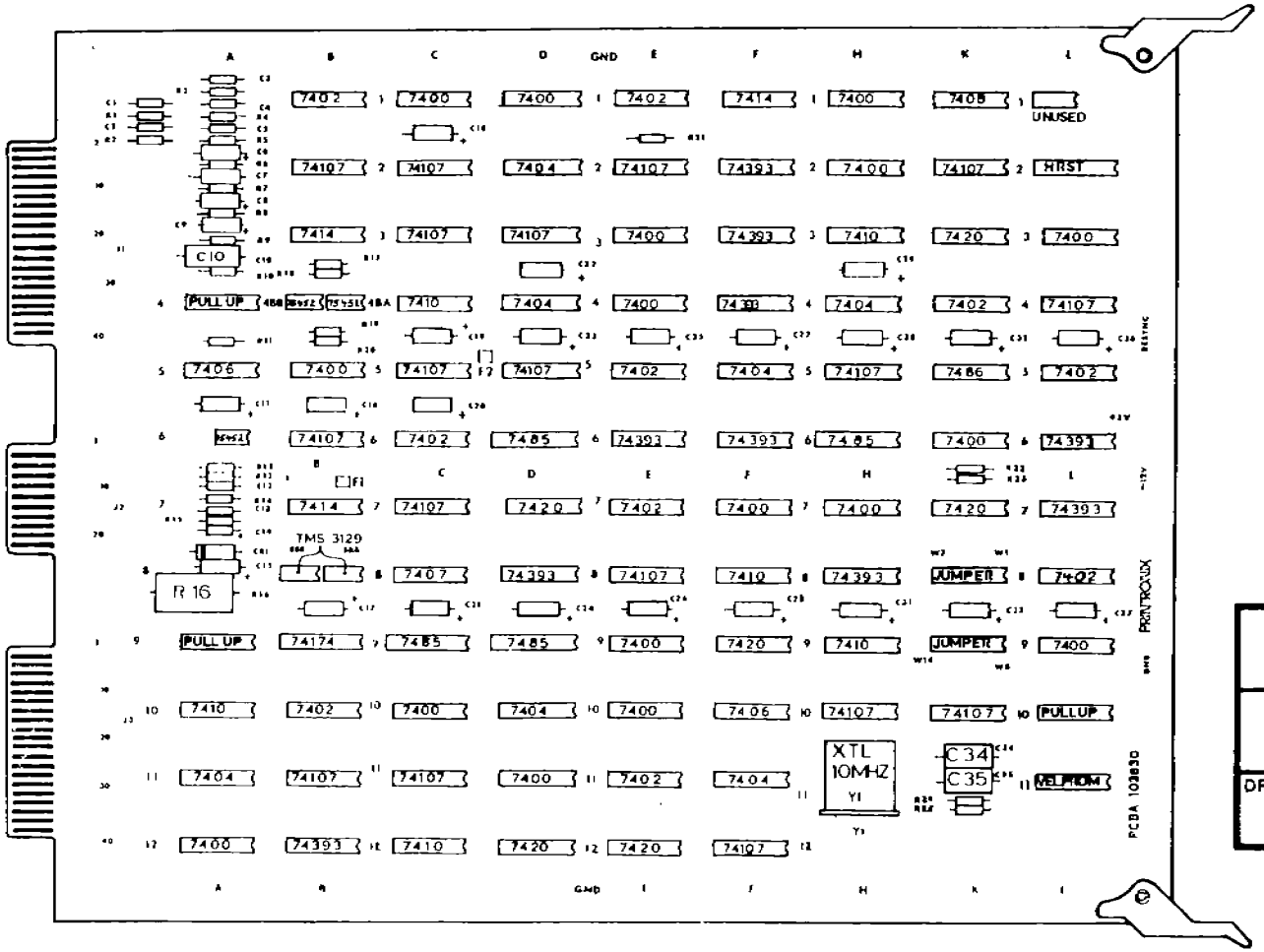

PRINTRONIX	
LOGIC B7 PCBA	
DRAWING NO. 103830 REV V	SHEET NO. 1 of 1

CONNECTOR BLOCK	
J1	CONTROL PANEL
J2	POWER
J3	A BOARD TRANSFER

JUMPER TABLE ⚠	W1	W2	W3	W4	W5	W6	W7	W8	W9	W10	W11	W12	W13	W14	W15	W16	W17
SKIP OVER FUNCTION 6LPI/8LPI																	
SKIP OVER PERF 3/4 LINES	X	X	X														
SKIP OVER PERF 4/6 LINES		X	X														
SKIP OVER PERF 3/6 LINES	X		X														
SKIP OVER PERF 4/6 LINES			X														
DOUBLE SPEED PLOT				X													
IMMEDIATE PAPER OUT FAULT																	X
PMD ACTIVE *						X											
DISABLE WFU							X										
8 LPI								X									
10 LPI								X	X								
P-300												X			X	X	
IN = NONE 1 LINE BINARY CT=000 OUT = NONE 1 LINE BINARY CT=001													X				
P-600					X							X			X		
P-150										X						X	

* = INSTALLED AT FACTORY

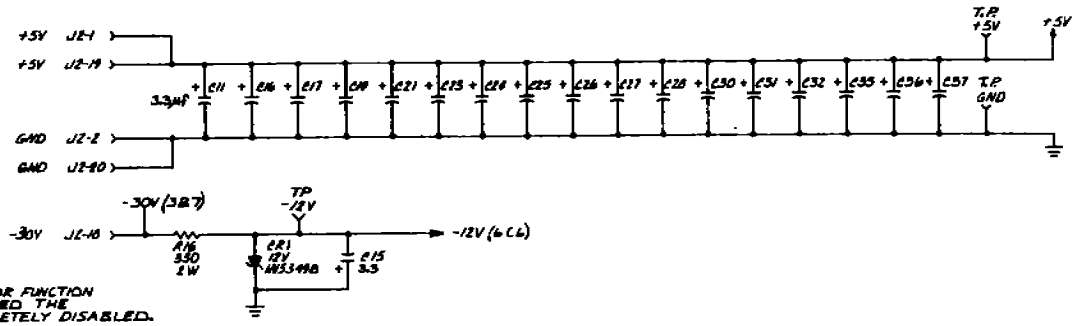

⚠ X INDICATES JUMPER INSTALLED FOR FUNCTION SPECIFIED. IF W3 IS NOT INSTALLED THE SKIP OVER PERFORATION IS COMPLETELY DISABLED.

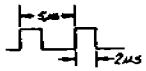

⚠ CLOCK WAVE FORM f = 2MHZ

2. ALL CAPACITORS - 3.3 µF, 15V, ±20%.

1. ALL RESISTORS - 1/4W, ± 5%.

NOTES: UNLESS OTHERWISE SPECIFIED

PRINTRONIX

LOGIC B7 SCHEMATIC

DRAWING NO.	SHEET NO.
104116 REV G	1 of 8

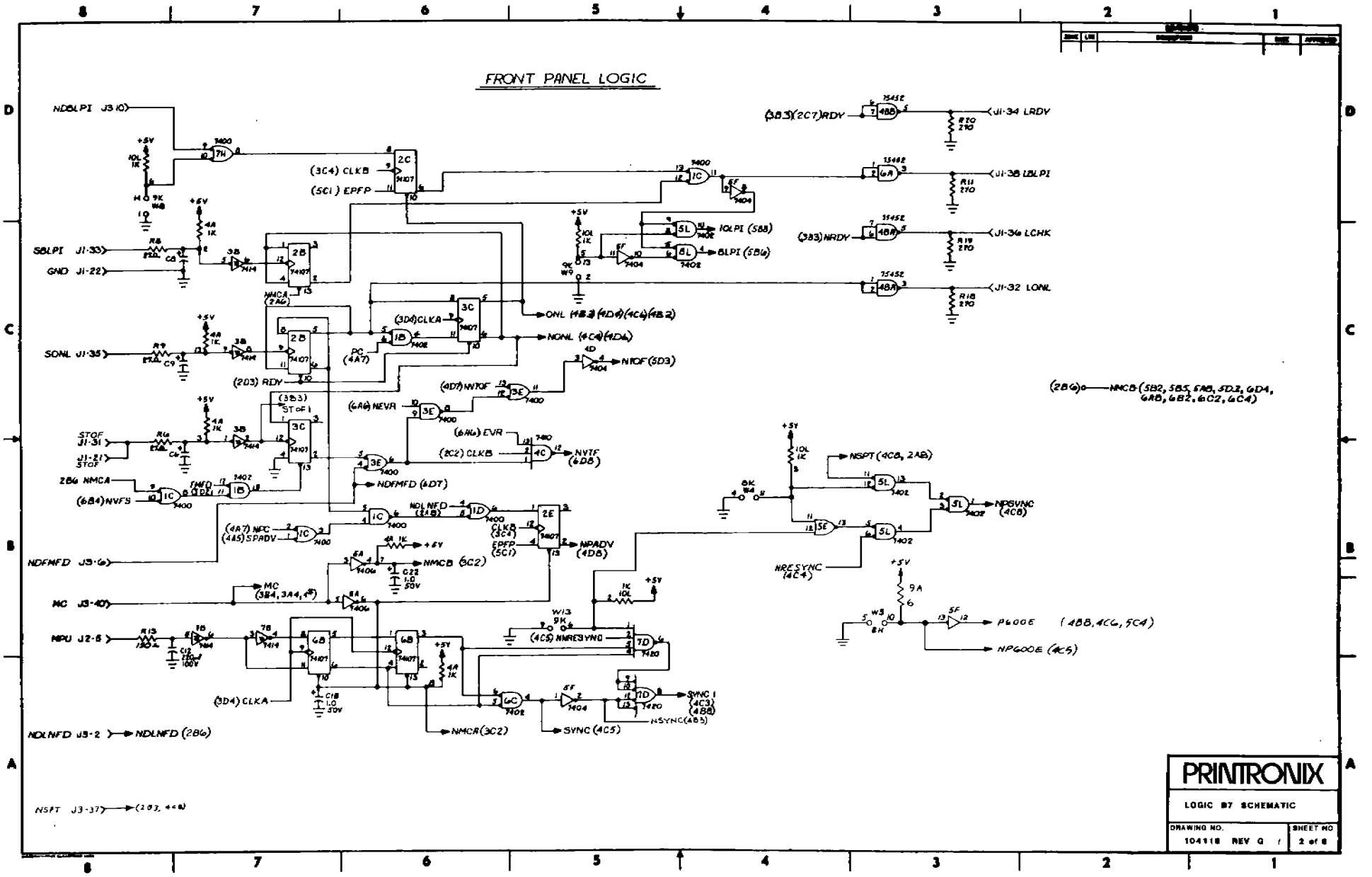
FRONT PANEL LOGIC
NDBLPI J3-10
SBLPI J1-33
GND J1-22
SONL J1-35
STOF J1-31
J1-21 STOF
2B6 NMCA
(6B4) NVFS
NDFMFD J3-6
MC J3-40
MPU J2-5
NDLNFD J3-2
NDLNFD (2B6)
NSPT J3-37
(3C4) CLKB
(5C1) EPFP
(3D4) CLKA
(2D3) RDY
(3B3) STOF
(4A7) NPC
(4A5) SPADV
NMCA (2A6)
PC (4A7)
(4D7) NVTOF
(6A6) NEVR
(6A6) EVR
(2C2) CLKB
NVTF (6D8)
NDFMFD (6D7)
NDLNFD (2A8)
CLKB (3C4)
EPFP (5C1)
NPADV (4D8)
NMCB (3C2)
MC (3B4, 3A4, 4#)
(4C5) NNRESYNC
NMCA (3C2)
SYNC (4C5)
SYNC 1 (4C3) (4B8)
NSYNC (4B5)
ONL (4B3) (4D4) (4C6) (4B2)
NONL (4C4) (4D6)
NTOF (5D3)
IOLPI (5B8)
BLPI (5B6)
(3B3) (2C7) RDY
J1-34 LRDY
J1-38 LBLPI
(3B3) NRDY
J1-36 LCHK
J1-32 LONL
(2B6) NMCB (5B2, 5B5, 5A8, 5D2, 6D4, 6A8, 6B2, 6C2, 6C4)
NSPT (4C8, 2A8)
NPSYNC (4C8)
NRESYNC (4C4)
P600E (4B8, 4C6, 5C4)
NP600E (4C5)
PRINTRONIX
LOGIC B7 SCHEMATIC
DRAWING NO. 104118 REV G
SHEET NO 2 of 8

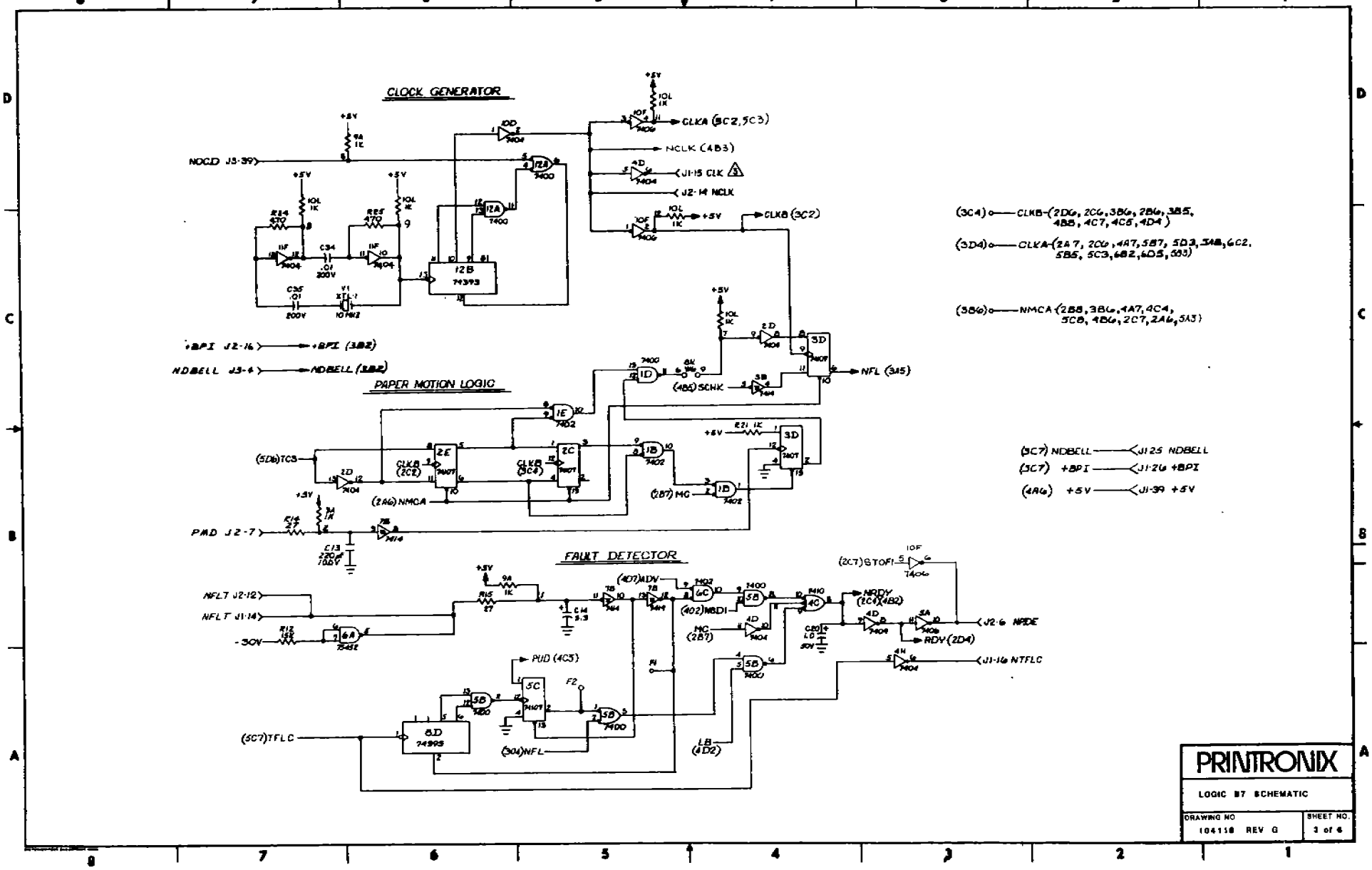
CLOCK GENERATOR
PAPER MOTION LOGIC
FAULT DETECTOR
NOCD J3-39
CLKA (3C2,5C3)
NCLK (4B3)
J1-15 CLK
J2-14 NCLK
CLKB (3C2)
+BPI J2-16
NDBELL J3-4
NFL (3A5)
(4B5) SCHK
(5D6) TC3
(2A6) NMCA
(2B7) MC
PMD J2-7
NFLT J2-12
NFLT J1-14
-30V
(2C7) STOFI
NRDY (2C4,4B2)
J2-6 NFDE
RDY (2D4)
J1-16 NTFLC
PUD (4C5)
(5C7) TFLC
(3D4) CLKA (2A7, 2C6, 4A7, 5B7, 5D3, 3A6, 6C2, 5B5, 5C3, 6B2, 6D5, 5B3)
(3B6) NMCA (2B8, 3B6, 4A7, 4C4, 5C8, 4B6, 2C7, 2A6, 3A3)
(3C7) NDBELL J1-25 NDBELL
(3C7) +BPI J1-26 +BPI
(4A6) +5V J1-39 +5V
PRINTRONIX
LOGIC B7 SCHEMATIC
DRAWING NO 104118 REV G
SHEET NO. 3 of 6

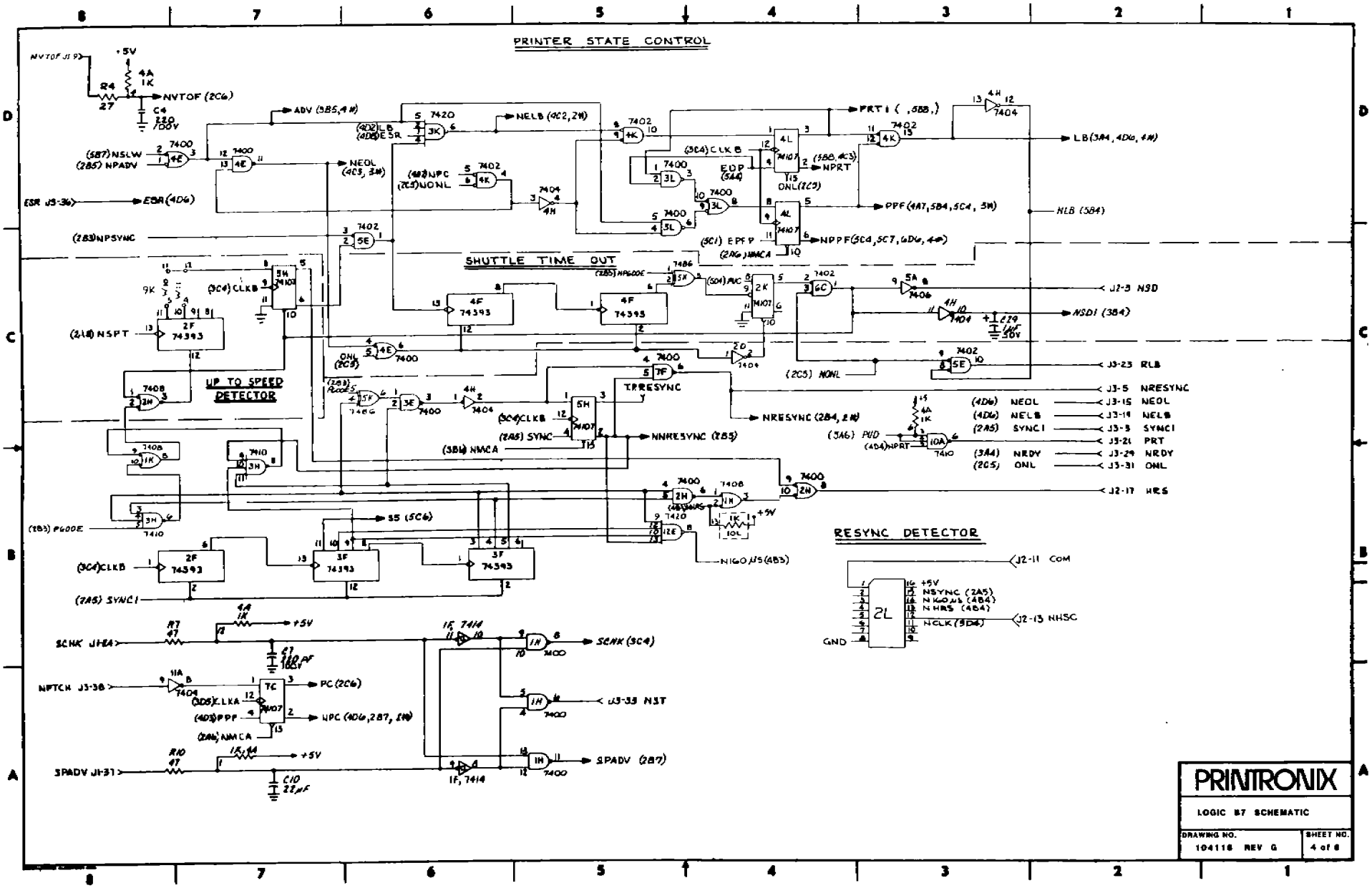
PRINTER STATE CONTROL
SHUTTLE TIME OUT
UP TO SPEED DETECTOR
RESYNC DETECTOR
PRINTRONIX
LOGIC B7 SCHEMATIC
DRAWING NO.
104118 REV G
SHEET NO.
4 of 6

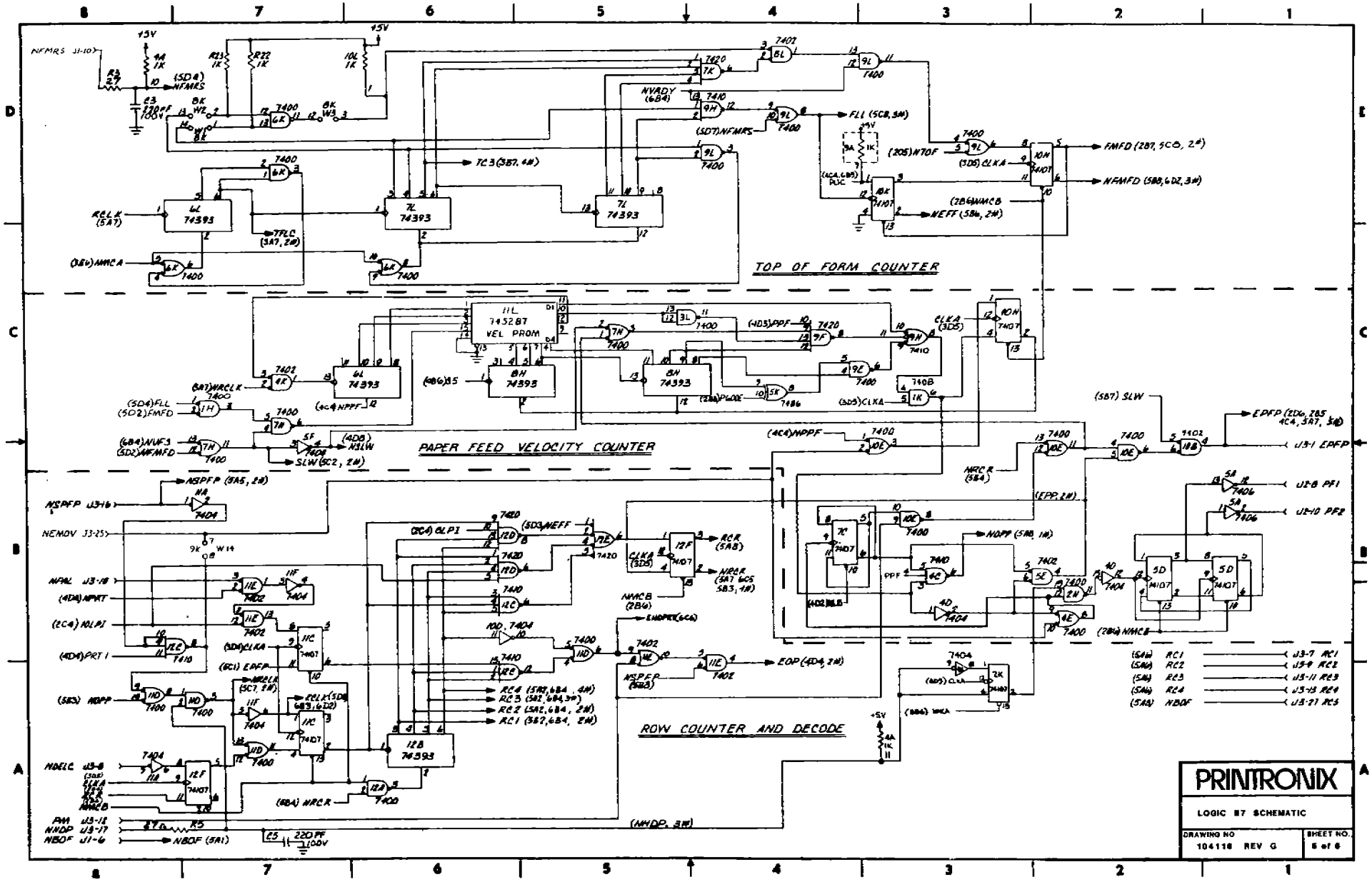
TOP OF FORM COUNTER
PAPER FEED VELOCITY COUNTER
ROW COUNTER AND DECODE
PRINTRONIX
LOGIC B7 SCHEMATIC
DRAWING NO 104118 REV G
SHEET NO. 5 of 6

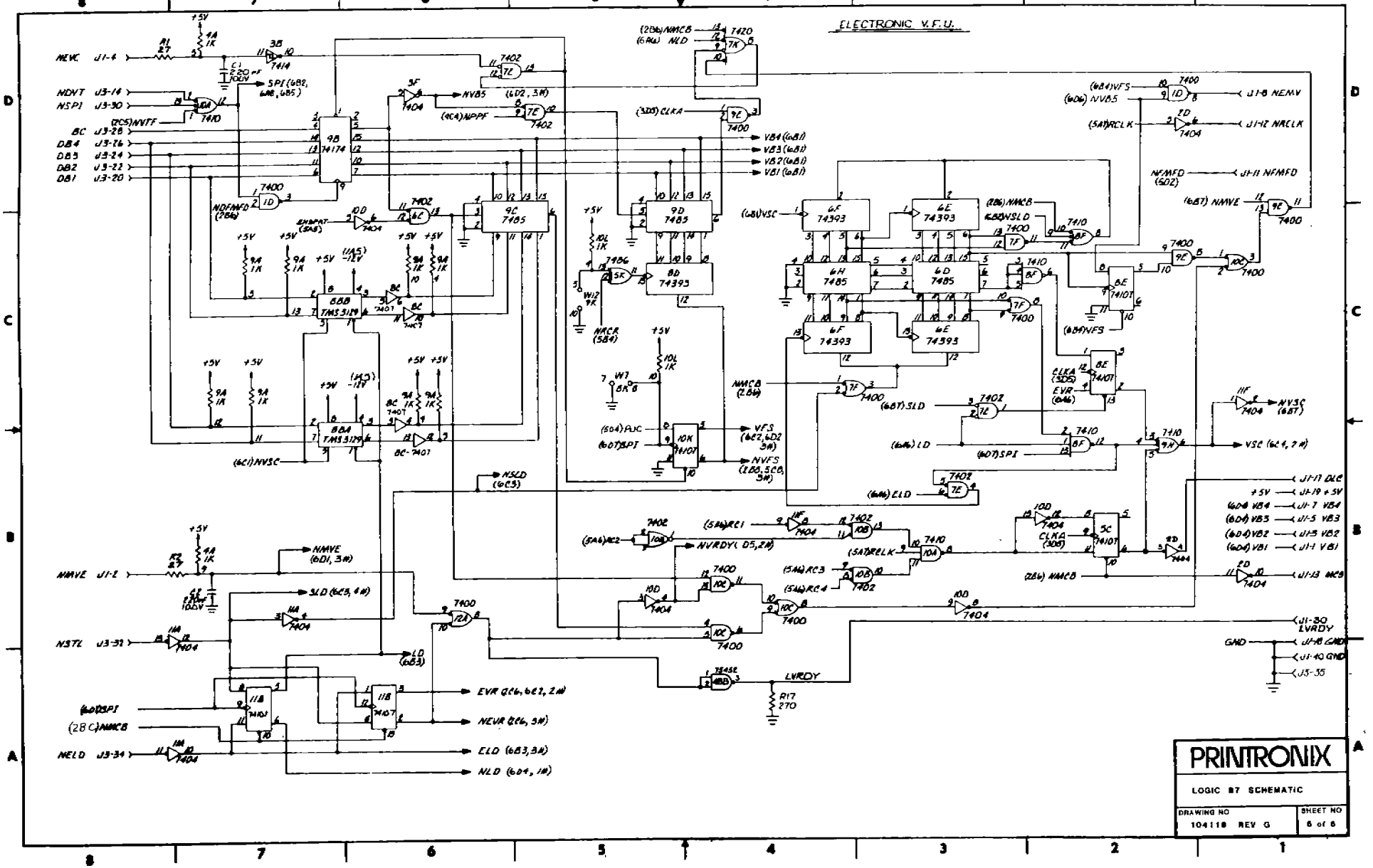
ELECTRONIC V.F.U.
PRINTRONIX
LOGIC B7 SCHEMATIC
DRAWING NO 104118 REV G
SHEET NO 5 of 5

6.0 DRAWINGS

6.12 LOGIC B9 PCBA
PART NUMBER 106594 REV J

REFERENCE DESIGNATOR	DESCRIPTION	PART NUMBER	QTY
N/A	Injector/Ejector	101382-001	2
N/A	Pin, Roll	101319-101	2
TP1-TP3	Terminal, Turret	101380-001	3
2L	Connector, Vertical, 8 Pin	105612-001	2
8K, 9K	Socket, I.C. 14 Pin	101384-001	2
2F, 3E, 10D	Socket, I.C. 16 Pin	101384-005	3
C21, C24, C25, C30, C33-C36	Capacitor, 100V, ± 10%, 220pf	102291-222	8
C26, C27	Capacitor, 200V, ± 10%, .01uf	101363-001	2
C22, C23, C29, C32	Capacitor, 50V, ± 20%, 1uf	102233-001	4
C1-C20, C28	Capacitor, 15V, ± 20%, 3.3uf	101362-001	21
C31	Capacitor, 15V, ± 20%, 22uf	101362-005	1
R1-R3, R13, R21, R28, R41, R46, R53, R61	Resistor, ¼W, 27 ohm, ± 5%	101337-271	10
R36, R37	Resistor, ¼W, 47 ohm, ± 5%	101337-471	2
R4	Resistor, ¼W, 150 ohm, ± 5%	101337-152	1
R17-R20, R57	Resistor, ¼W, 270 ohm, ± 5%	101337-472	5
R24, R27	Resistor, ¼W, 470 ohm, ± 5%	101337-472	2
R5-R12, R14-R16, R23, R25, R26, R29, R30-R35, R38-R40, R42-R45, R47-R52, R54-R56, R58, R59, R60, R62-R66	Resistor, ¼W, 1K, ± 5%	101337-103	45
R22	Resistor, 15K ± 5% ¼W	101337-154	1
Y1	Crystal, 10 MHz	101375-002	1
1E, 1H, 2D, 3H, 4D, 4F, 5C, 5L, 6F, 7B, 7F, 8E, 8H, 9E, 11A, 11F	I.C. 7400	101338-001	16
1B, 1C, 4K, 5F, 6E, 8D, 8L, 10E, 10F, 10H	I.C. 7402	101339-001	10

6.0 DRAWINGS

6.12 LOGIC B9 PCBA (Continued)
PART NUMBER 106594 REV J

REFERENCE DESIGNATOR	DESCRIPTION	PART NUMBER	QTY
3B, 3C, 3K, 8F, 9B 9F, 10L	I.C. 7404	101340-001	7
6A, 7C	I.C. 7406	101341-001	2
5H, 7E	I.C. 7408	104240-001	2
3D, 6C, 6L, 8B, 10A, 11H	I.C. 7410	101342-001	6
1A, 5E, 6B	I.C. 7414	101343-001	3
4L, 5D, 10B	I.C. 7420	101344-001	3
11C, 11D, 12C, 12H	I.C. 7485	101347-001	4
5K	I.C. 7486	101348-001	1
1D, 2B, 2C, 4B, 4C, 4H, 5B, 7A, 7D, 7H, 8A, 8C, 9C, 9D, 9H, 10K, 11K, 11L	I.C. 74107	101349-001	18
11B	I.C. 74174	101353-001	1
11E	I.C. 74LS244	103342-001	1
1F, 2E, 2H, 3F, 6H, 6K, 7K, 10C, 12D 12F	I.C. 74393	101355-001	10
3A-5A	I.C. 75452	101356-001	3

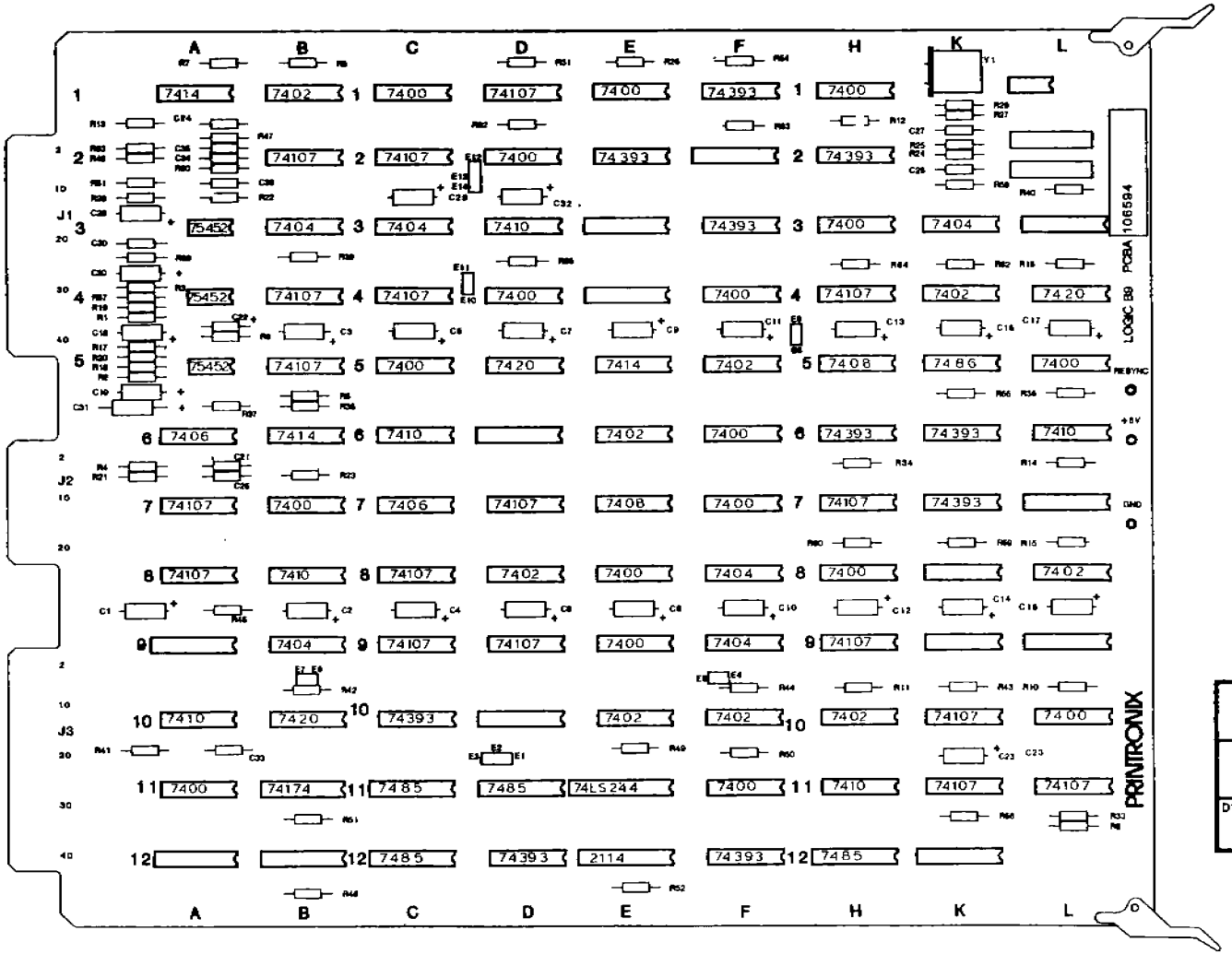

PRINTRONIX

LOGIC B9 PCBA

DRAWING NO.	SHEET NO.
106594 REV A	1 of 1

P300

JUMPER TABLE

JUMPER	FUNCTION	IC LOCATION	SCHEMATIC LOCATION
W3	SKIP OVER PERF 1 INCH	8K	8D5
W1, W3	SKIP OVER PERF 5/6 INCH		
W2, W3	SKIP OVER PERF 2/3 INCH		
W1, W2, W3	SKIP OVER PERF 1/2 INCH		
W4	DOUBLE SPEED PLOT PLOTS ON BOTH LEFT TO RIGHT AND RIGHT TO LEFT STROKES OF THE SHUTTLE		3B3
W6	PAPER MOTION DETECTOR ENABLE (OUT = DISABLE)		4C4
W7	DISABLE ELECTRONIC VERTICAL FORMAT UNIT (OUT = ENABLE)		7C5
W8	8 LINES/INCH VERTICAL DENSITY SELECTED	9K	3D4
W9	ALTERNATE LINES/INCH ENABLE WITH 8 LPI SELECTED. DEFAULT = 10 LPI (SEE E-JUMPERS BELOW)		3C4
W10, W14	P150 OPERATION		5C7, 6B6
W11, W13	P300 OPERATION		3B3, 5C7
W5, W11, W13	P600 OPERATION	8K, 9K	3B3, 5C7
W12	IN = MOVE 1 LINE BINARY CT = 000 OUT = MOVE 1 LINE BINARY CT = 001	9K	7C5
W14	P300 OPERATION WITH LOGIC A1 THROUGH A5	9K	6B6
E1 - E2	7 DOT ROW CHARACTERS (IN ETCH)	—	6B5
E2 - E3	8 DOT CHARACTERS, ETCH BETWEEN E1 - E2 MUST BE CUT		
E4 - E5	9 LPI (REPLACING 10 LPI)		6B6
E6 - E7	MOD PLOT	—	6C6
E8 - E9	ALTERNATE FORM LENGTH	—	8D6
E10 - E11	8 LPI SWITCH DISABLED WHEN ON-LINE	—	3D7
E12 - E13	STOP ON FAULT (CUT E13 - E14 ETCH)	—	9A5
E13 - E14	STOP 2 INCHES AFTER FAULT (IN ETCH)		

SPARE CIRCUITS

TYPE	LOCATION	OUTPUT PIN
7400	4D	8
7402	1B 6E	4 1,4
7404	3K 8F	2 4
7406	7C	2,6
7408	5H	8
7410	6C 10A	8,12 6
7414	5E	2,4,6,8

I.C. GND AND VOLTAGE INFO

TYPE	GND PIN	+5V PIN
7400	7	14
7402	7	14
7404	7	14
7406	7	14
7408	7	14
7410	7	14
7414	7	14
7420	7	14
7485	8	16
7486	7	14
74107	7	14
74174	8	16
74LS244	10	20
74393	7	14
75452	4	8
2114	9	18

CONNECTORS

J1	CONTROL PANEL
J2	POWER
J3	A-B INTERFACE

LAST REF DESIG USED	DESIG NOT USED
C36	
R66	
TP3	
Y1	

2. ALL CAPACITOR VALUES ARE IN MICROFARADS, ±20%, 15V.
1. ALL RESISTOR VALUES ARE GIVEN IN OHMS, ± 5%, 1/4W.

NOTES: UNLESS OTHERWISE SPECIFIED

PRINTRONIX

LOGIC B9 SCHEMATIC

DRAWING NO 106896 REV F

SHEET NO. 1 of 3

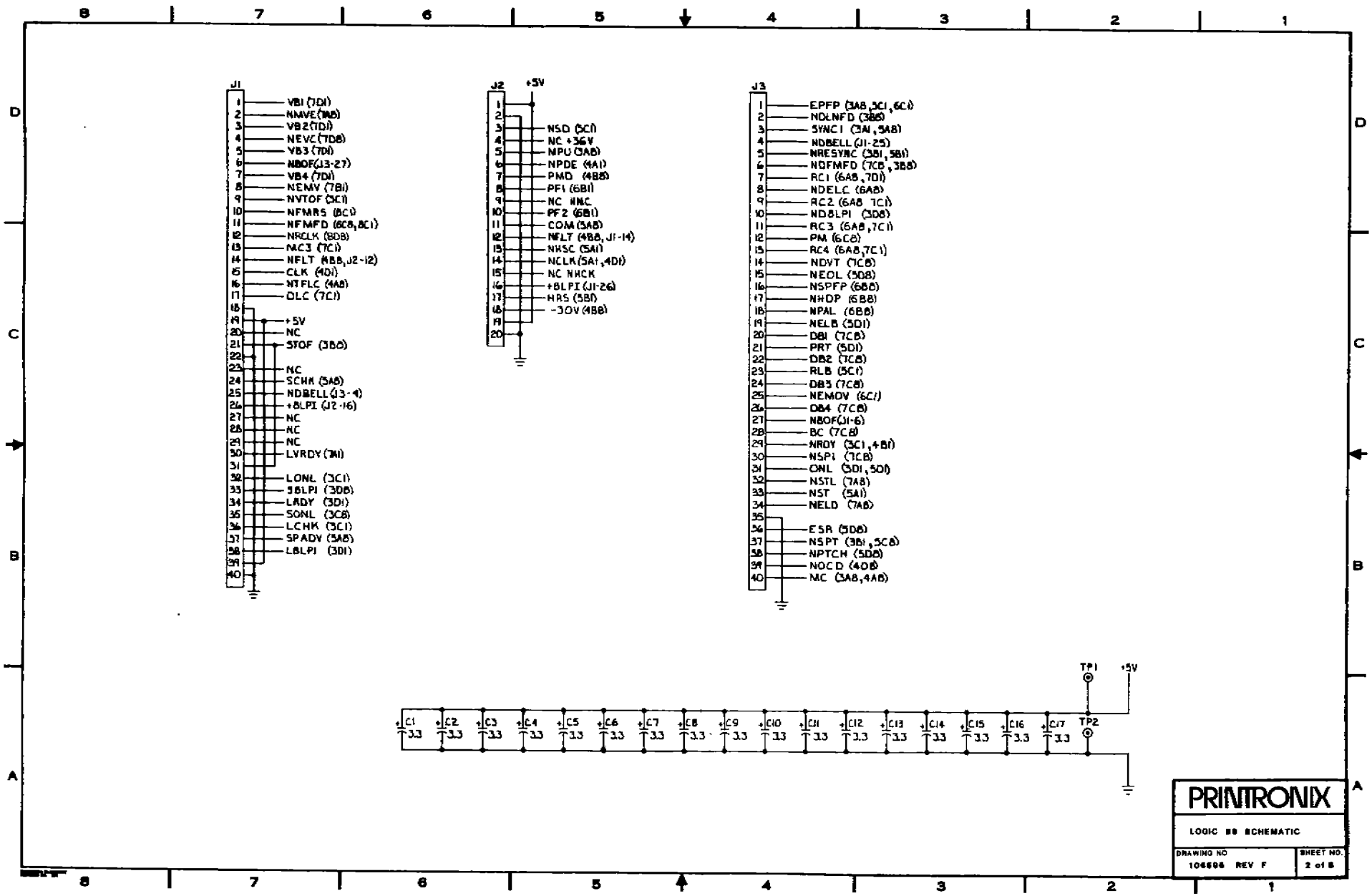
J1
1 VB1 (7D1)
2 NMVE (7A8)
3 VB2 (7D1)
4 NEVC (7D8)
5 VB3 (7D1)
6 NBOF (J3-27)
7 VB4 (7D1)
8 NEMV (7B1)
9 NVTOF (3C1)
10 NFMRS (8C1)
11 NFMFD (6C8, 8C1)
12 NRCLK (8D8)
13 MC3 (7C1)
14 NFLT (4B8, J2-12)
15 CLK (4D1)
16 NTFLC (4A8)
17 DLC (7C1)
18
19 +5V
20 NC
21 STOF (3B8)
22
23 NC
24 SCHK (5A8)
25 NDBELL (J3-4)
26 +8LPI (J2-16)
27 NC
28 NC
29 NC
30 LVRDY (7A1)
31
32 LONL (3C1)
33 38LPI (3D8)
34 LRDY (3D1)
35 SONL (3C8)
36 LCHK (3C1)
37 SPADV (5A8)
38 LBLPI (3D1)
39
40
J2
+5V
1
2
3 NSD (3C1)
4 NC +36V
5 NPU (3A8)
6 NPDE (4A1)
7 PMD (4B8)
8 PF1 (6B1)
9 NC NNC
10 PF2 (6B1)
11 COM (3A8)
12 NFLT (4B8, J1-14)
13 NHSC (5A1)
14 NCLK (5A1, 4D1)
15 NC NHCK
16 +8LPI (J1-26)
17 HRS (5B1)
18 -30V (4B8)
19
20
J3
1 EPFP (3A8, 3C1, 6C1)
2 NDLNFD (3B8)
3 SYNC1 (3A1, 5A8)
4 NDBELL (J1-25)
5 NRESYNC (3B1, 5B1)
6 NDFMFD (7C8, 3B8)
7 RC1 (6A8, 7D1)
8 NDELC (6A8)
9 RC2 (6A8, 7C1)
10 ND8LPI (3D8)
11 RC3 (6A8, 7C1)
12 PM (6C8)
13 RC4 (6A8, 7C1)
14 NDVT (7C8)
15 NEOL (5D8)
16 NSPFP (6B8)
17 NHDP (6B8)
18 NPAL (6B8)
19 NELB (5D1)
20 DB1 (7C8)
21 PRT (5D1)
22 DB2 (7C8)
23 RLB (5C1)
24 DB3 (7C8)
25 NEMOV (6C1)
26 DB4 (7C8)
27 NBOF (J1-6)
28 BC (7C8)
29 NRDY (3C1, 4B1)
30 NSP1 (7C8)
31 ONL (5D1, 5D1)
32 NSTL (7A8)
33 NST (5A1)
34 NELD (7A8)
35
36 ESR (5D8)
37 NSPT (3B1, 5C8)
38 NPTCH (5D8)
39 NOCD (4D8)
40 MC (3A8, 4A8)
TP1
+5V
TP2
C1 3.3
C2 3.3
C3 3.3
C4 3.3
C5 3.3
C6 3.3
C7 3.3
C8 3.3
C9 3.3
C10 3.3
C11 3.3
C12 3.3
C13 3.3
C14 3.3
C15 3.3
C16 3.3
C17 3.3
PRINTRONIX
LOGIC BD SCHEMATIC
DRAWING NO 106696 REV F
SHEET NO. 2 of 8

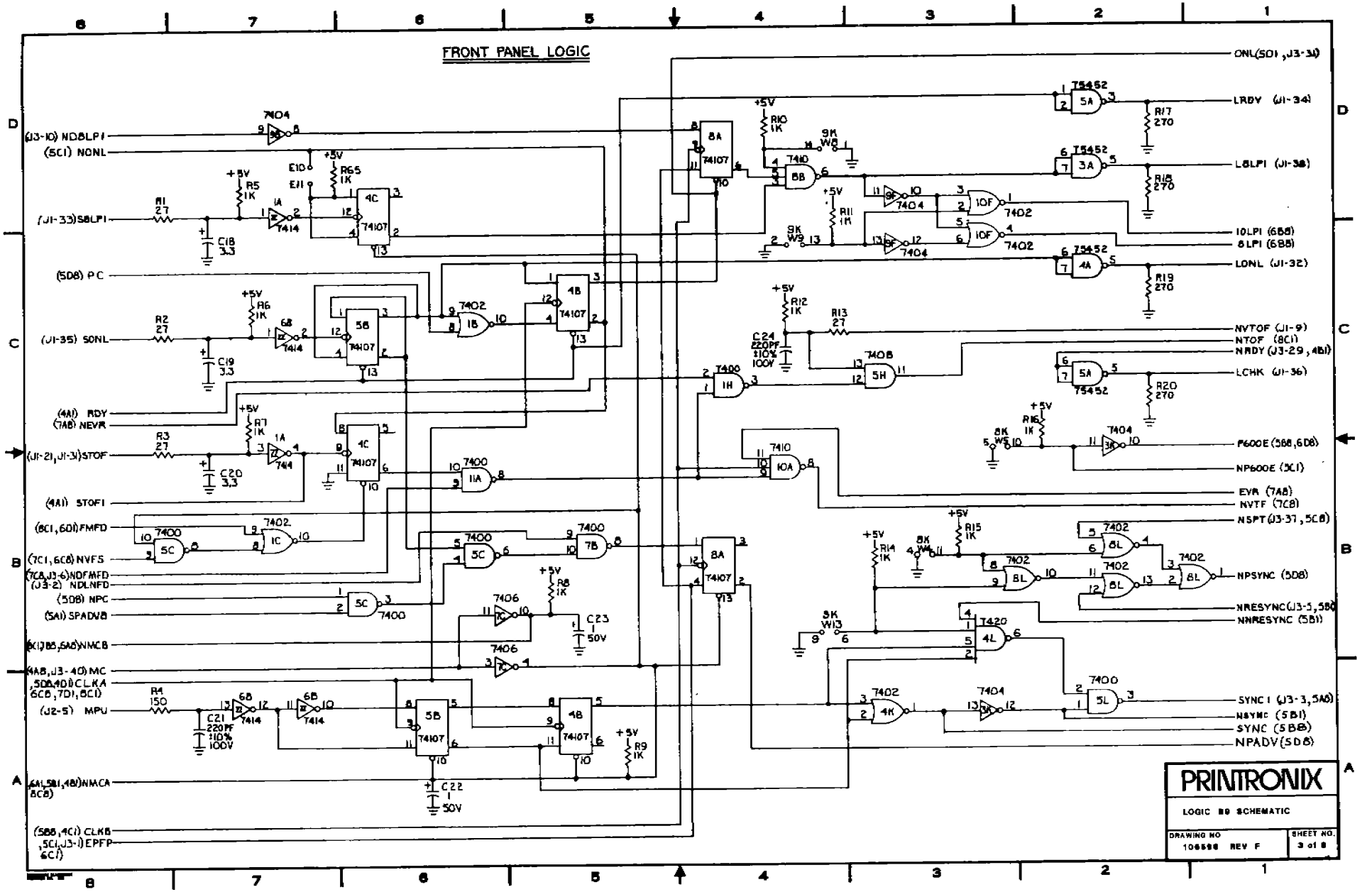
FRONT PANEL LOGIC
(J3-10) NDBLPI
(5C1) NONL
(J1-33) SBLPI
(5D8) PC
(J1-35) SONL
(4A1) RDY
(7A8) NEVR
(J1-21, J1-31) STOF
(4A1) STOFI
(8C1, 6D1) FMFD
(7C1, 6C8) NVFS
(7C8, J3-6) NDFMFD
(J3-2) NDLNFD
(5D8) NPC
(5A1) SPADVB
(6C1, 7B8, 5A8) NMCB
(4A8, J3-40) MC
(5D8, 4D1) CLKA
(6C8, 7D1, 8C1)
(J2-5) MPU
(6A1, 5B1, 4B1) NMCA
(6C8)
(5B8, 4C1) CLKB
(5C1, J3-1) EPFP
(6C1)
ONL (5D1, J3-31)
LRDY (J1-34)
LBLPI (J1-38)
10LPI (6B8)
8LPI (6B8)
LONL (J1-32)
NVTOF (J1-9)
NTOF (8C1)
NRDY (J3-29, 4B1)
LCHK (J1-36)
P600E (5B8, 6D8)
NP600E (3C1)
EVR (7A8)
NVTF (7C8)
NSPT (J3-37, 5C8)
NPSYNC (5D8)
NRESYNC (J3-5, 5B0)
NNRESYNC (5B1)
SYNC I (J3-3, 5A0)
NSYNC (5B1)
SYNC (5B8)
NPADV (5D8)
PRINTRONIX
LOGIC B9 SCHEMATIC
DRAWING NO 106598 REV F
SHEET NO. 3 of 8

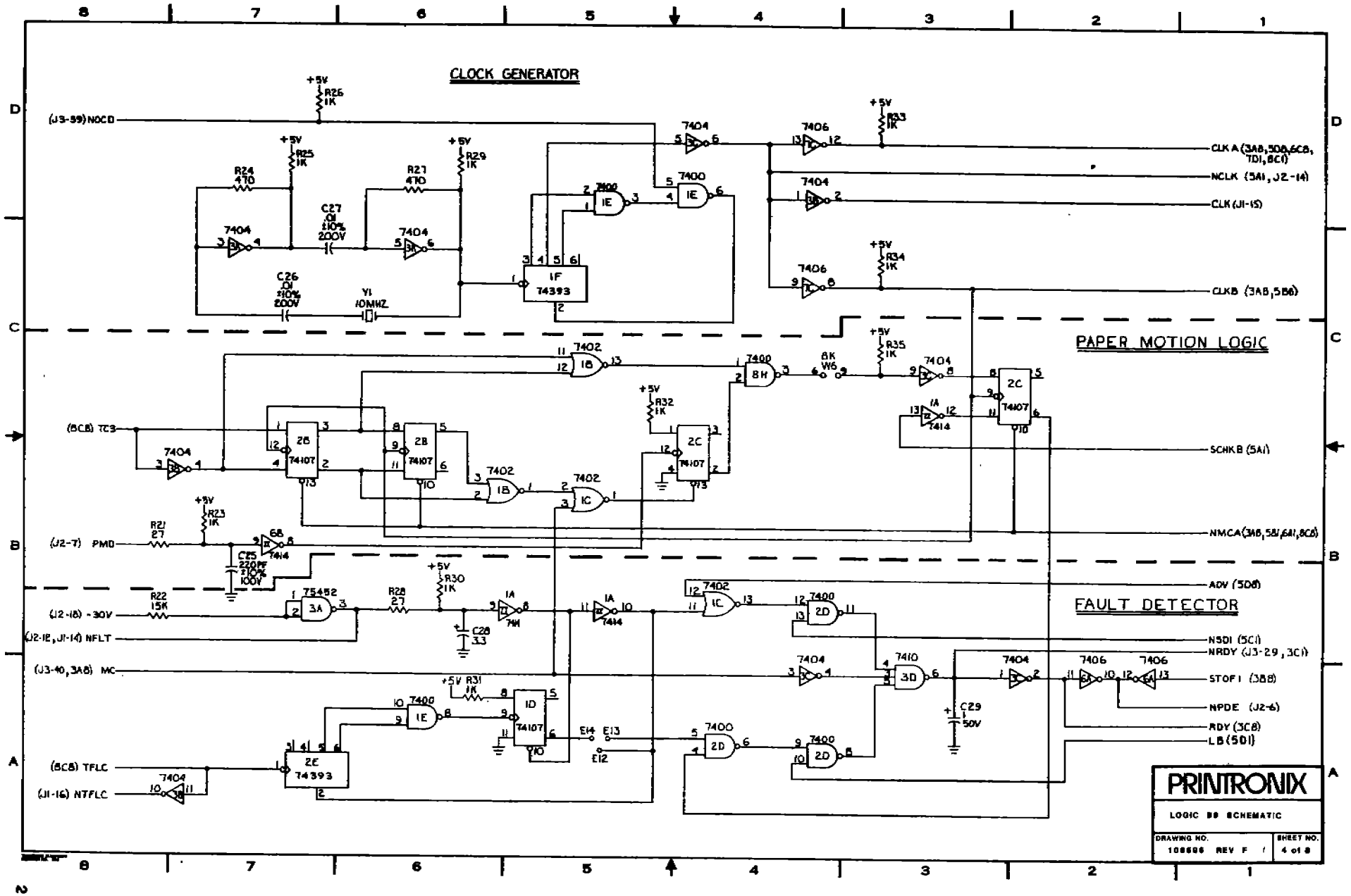
CLOCK GENERATOR
PAPER MOTION LOGIC
FAULT DETECTOR
(J3-39) NOCD
CLK A (3A8,5D8,6C8, 7D1,8C1)
NCLK (5A1, J2-14)
CLK (J1-15)
CLKB (3A8,5B6)
(8C8) TC3
(J2-7) PMD
(J2-18) -30V
(J2-18, J1-14) NFLT
(J3-40, 3A8) MC
(8C8) TFLC
(J1-16) NTFLC
SCHKB (5A1)
NMCA (3A8, 5A1, 6A1, 8C8)
ADV (5D8)
NSDI (5C1)
NRDY (J3-29, 3C1)
STOP I (3B8)
NPDE (J2-6)
RDY (3C8)
LB (5D1)
PRINTRONIX
LOGIC BD SCHEMATIC
DRAWING NO. 108606 REV F
SHEET NO. 4 of 8

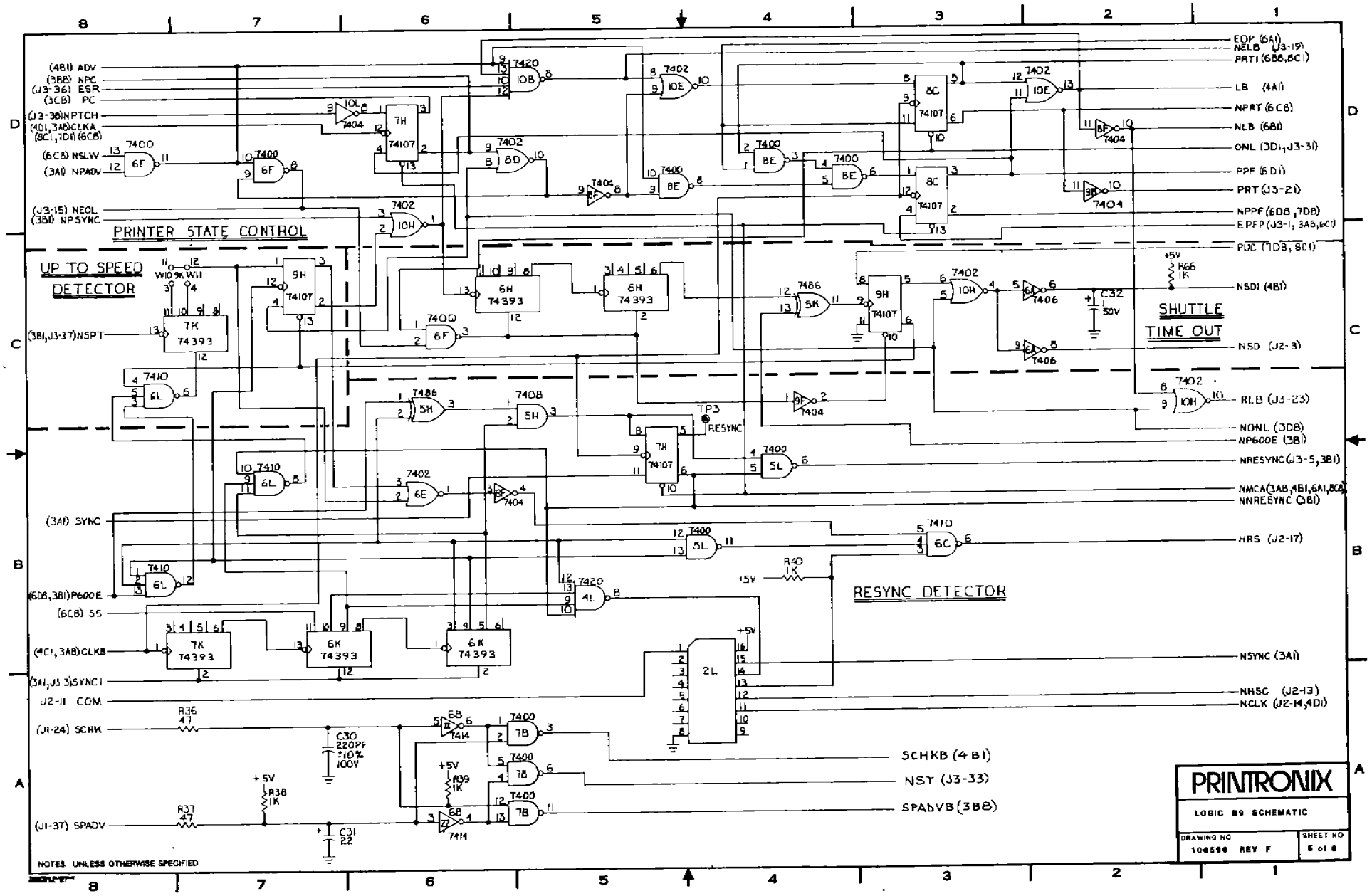
PRINTER STATE CONTROL
UP TO SPEED DETECTOR
SHUTTLE TIME OUT
RESYNC DETECTOR
(4B1) ADV
(3B8) NPC
(J3-36) ESR
(3C8) PC
(J3-38)NPTCH
(4D1,3A8)CLKA (8C1,7D1)(6C8)
(6C8) NSLW
(3A1) NPADV
(J3-15) NEOL
(3B1) NPSYNC
(3B1,J3-37)NSPT
(3A1) SYNC
(6D8,3B1)P600E
(6C8) SS
(4C1,3A8)CLKB
(3A1,J3-3)SYNC1
J2-11 COM
(J1-24) SCHK
(J1-37) SPADV
EOP (6A1)
NELB (J3-19)
PRT1 (6B8,8C1)
LB (4A1)
NPRT (6C8)
NLB (6B1)
ONL (3D1,J3-31)
PPF (6D1)
PRT (J3-21)
NPPF (6D8,7D8)
EPFP (J3-1, 3A8,6C1)
PUC (7D8, 8C1)
NSD1 (4B1)
NSD (J2-3)
RLB (J3-23)
NONL (3D8)
NP600E (3B1)
NRESYNC (J3-5,3B1)
NMCA (3A8,4B1,6A1,8C8)
NNRESYNC (3B1)
HRS (J2-17)
NSYNC (3A1)
NHSC (J2-13)
NCLK (J2-14,4D1)
SCHKB (4B1)
NST (J3-33)
SPADVB (3B8)
TP3
RESYNC
NOTES. UNLESS OTHERWISE SPECIFIED
PRINTRONIX
LOGIC B9 SCHEMATIC
DRAWING NO 106596 REV F
SHEET NO 5 of 8

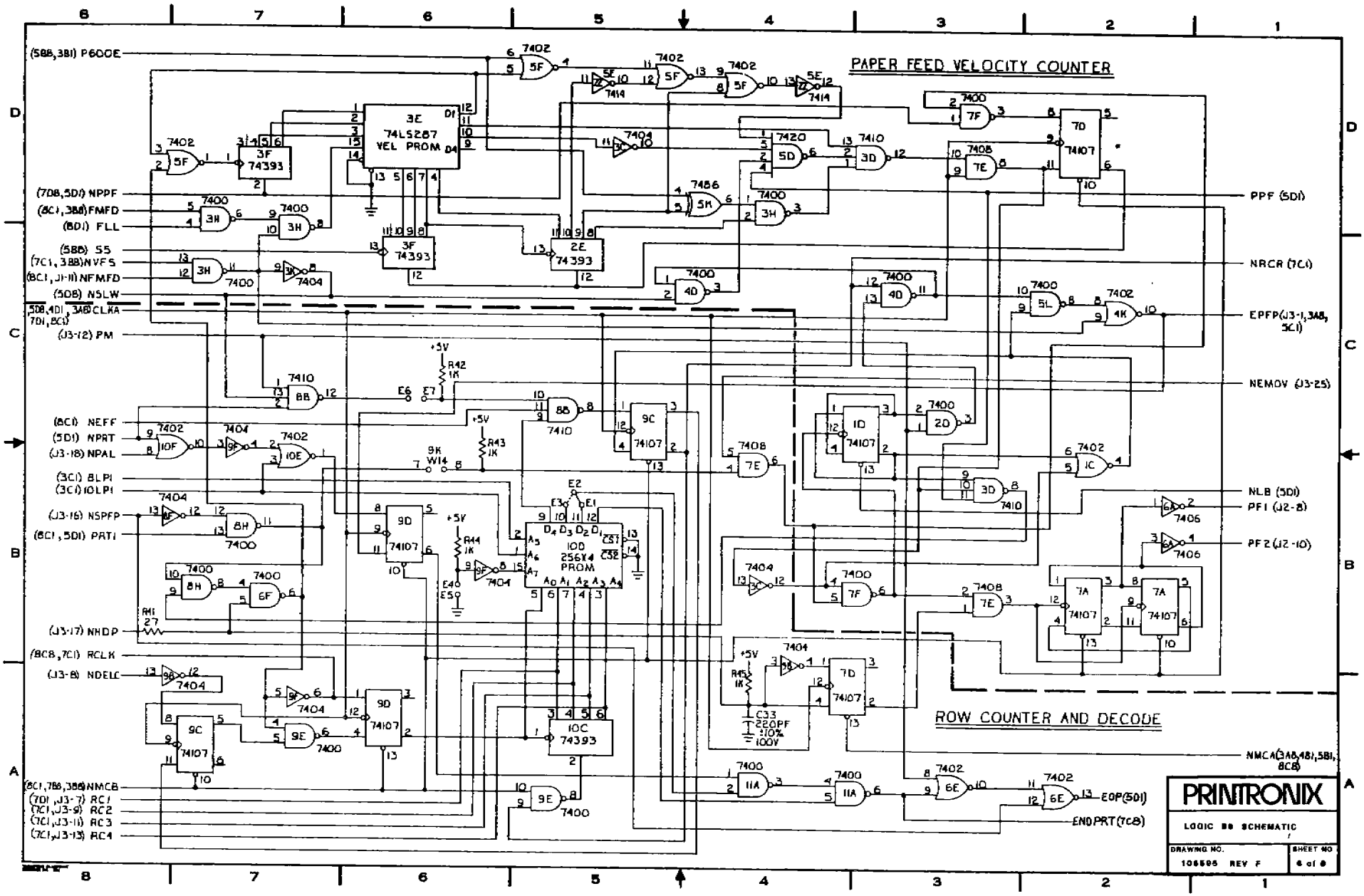
PAPER FEED VELOCITY COUNTER
ROW COUNTER AND DECODE
(5B8,3B1) P600E
(7D8,5D1) NPPF
(8C1,3B8) FMFD
(8D1) FLL
(5B8) S5
(7C1,3B8) NVFS
(8C1,J1-11) NFMFD
(5D8) NSLW
(5D8,4D1,3A8 7D1,8C1) CLKA
(J3-12) PM
(8C1) NEFF
(5D1) NPRT
(J3-18) NPAL
(3C1) BLPI
(3C1) IOLPI
(J3-16) NSPFP
(8C1,5D1) PRTI
(J3-17) NHDP
(8C8,7C1) RCLK
(J3-8) NDELC
(8C1,7B8,3B8) NMCB
(7D1,J3-7) RC1
(7C1,J3-9) RC2
(7C1,J3-11) RC3
(7C1,J3-13) RC4
PPF (5D1)
NRCR (7C1)
EPFP(J3-1,3A8, 5C1)
NEMOV (J3-25)
NLB (5D1)
PF1 (J2-8)
PF2 (J2-10)
NMCA(3A8,4B1,5B1, 8C8)
EOP(5D1)
ENDPRT(7C8)
3E 74LS287 VEL PROM
3F 74393
2E 74393
10C 74393
10D 256X4 PROM
PRINTRONIX
LOGIC BD SCHEMATIC
DRAWING NO. 106505 REV F
SHEET NO. 6 of 8

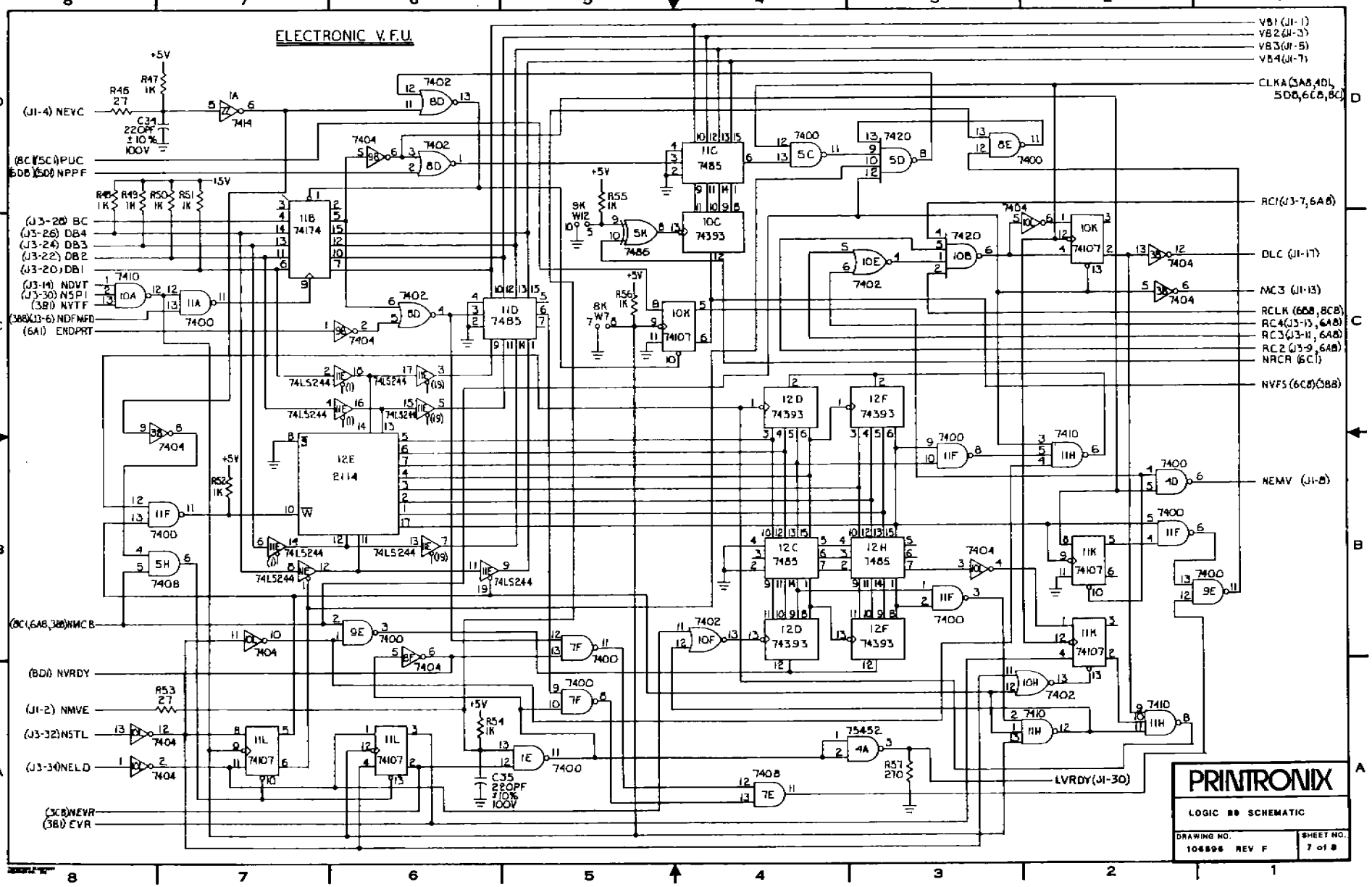
ELECTRONIC V.F.U.
PRINTRONIX
LOGIC 88 SCHEMATIC
DRAWING NO. 106596 REV F
SHEET NO. 7 of 8
(J1-4) NEVC
(8C)(5C1) PUC
(6D8)(5D1) NPPF
(J3-28) BC
(J3-26) DB4
(J3-24) DB3
(J3-22) DB2
(J3-20) DB1
(J3-14) NDVT
(J3-30) NSP1
(3B1) NVTF
(3B8)(J3-6) NDFMFD
(6A1) ENDPRT
(8C1,6A8,3B8) NMCB
(8D1) NVRDY
(J1-2) NMVE
(J3-32) NSTL
(J3-34) NELD
(3C8) NEVR
(3B1) EVR
VB1 (J1-1)
VB2 (J1-3)
VB3 (J1-5)
VB4 (J1-7)
CLKA (3A8,4D1, 5D8,6C8,8C)
RC1 (J3-7,6A8)
DLC (J1-17)
NC3 (J1-13)
RCLK (6B8,8C8)
RC4 (J3-13,6A8)
RC3 (J3-11,6A8)
RC2 (J3-9,6A8)
NRCR (6C1)
NVFS (6C8)(3B8)
NEMV (J1-8)
LVRDY (J1-30)

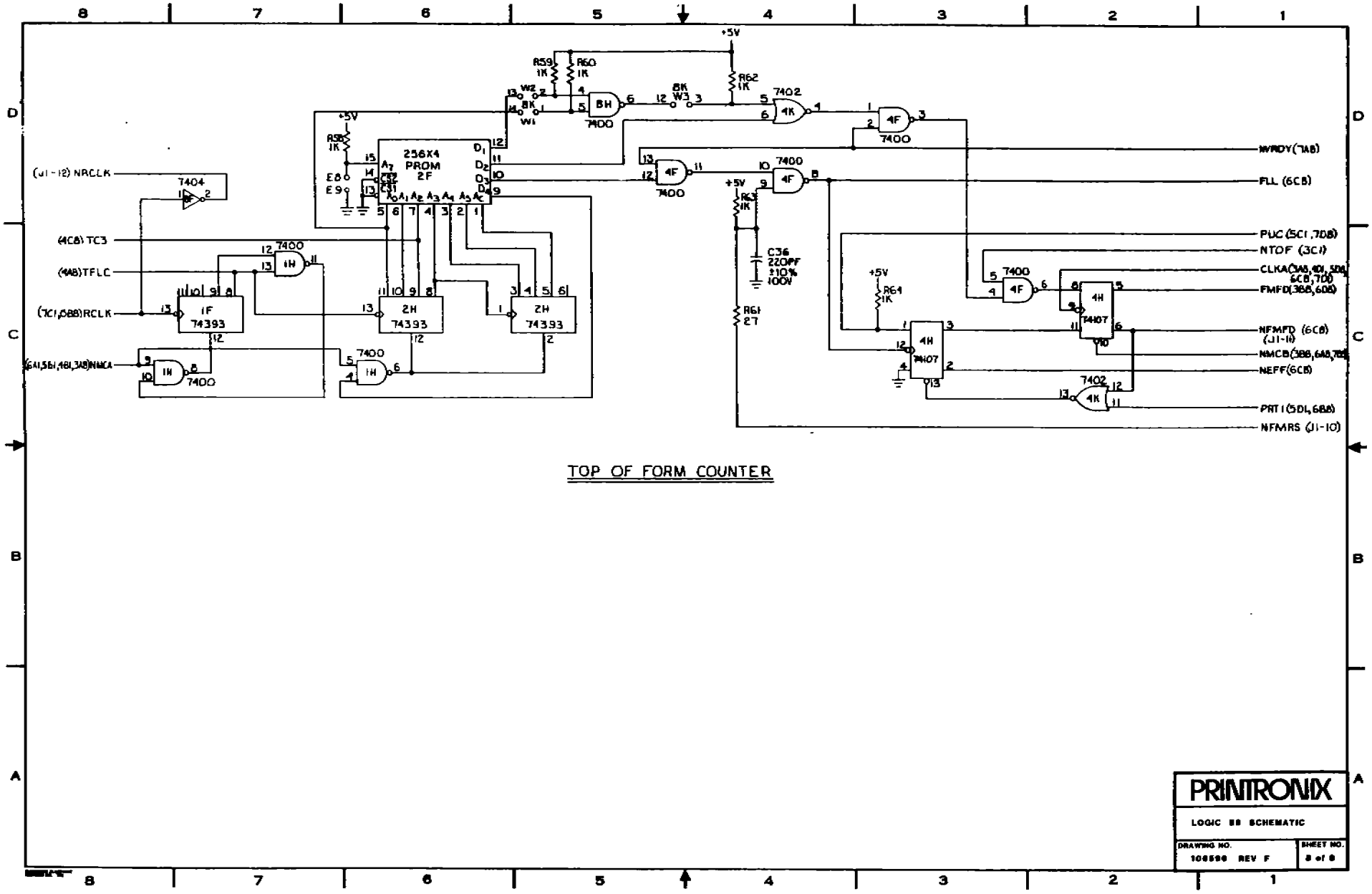

TOP OF FORM COUNTER

PRINTRONIX

LOGIC B8 SCHEMATIC

DRAWING NO. 108590 REV F

SHEET NO. 8 of 8

6.0 DRAWINGS

6.13 LOGIC B10 PCBA
PART NUMBER 107348 REV

REFERENCE DESIGNATOR	DESCRIPTION	PART NUMBER	QTY
N/A	Injector/Ejector	101382-001	2
N/A	Pin, Roll	101319-010	2
TP1-TP3	Terminal, Turret	101380-001	3
2L	Connector, Vertical, 8 Pin	105612-001	2
4H, 12C	Socket, I.C., 14 Pin	101384-001	2
5C, 10F, 11B	Socket, I.C., 16 Pin	101384-005	3
C21-C23, C32, C34-37	Capacitor, 100V, 10%, 220pfd	102291-222	8
C26, C27	Capacitor, 200V, 10%, .01uf	101363-001	2
C28-C31, C33	Capacitor, 50V, 20%, 1uf	102233-001	5
C1-C20, C25	Capacitor, 15V, 20%, 3.3uf	101362-005	2
C24	Capacitor, 15V, 20%, 22uf	101362-005	1
R1-R3, R8, R13, R17, R27, R31, R32, R34	Resistor, ¼W, 27 ohm, 5%	101337-271	10
R14, R15	Resistor, ¼W, 47 ohm, 5%	101337-471	2
R24	Resistor, ¼W, 150 ohm, 5%	101337-152	1
R10-R12, R23, R35	Resistor, ¼W, 270 ohm, 5%	101337-272	5
R18, R21	Resistor, ¼W, 470 ohm, 5%	101337-472	2
R4-R7, R9, R19, R20, R22, R25, R26, R29, R30, R33	Resistor, ¼W, 1K, 5%	101337-103	14
R16	Resistor, ¼W, 1K, 5%	101337-154	1
Y1	Crystal, 10 MHz	101375-002	1
4K, 7A, 11D	Resistor Network, DPI, 1K 2%	101381-102	3
1F, 2C, 2F, 2K, 3K, 4B, 4D, 5B, 6D, 6L, 7H, 9B, 10C, 10H, 10L, 11L, 12B	I.C. 7400	101338-001	17
1C, 3E, 6K, 7C, 7E, 8F, 9A, 10D, 11K, 12A	I.C. 7402	101339-001	10
2D, 2E, 3B, 6H, 8A, 8D, 10A, 10K, 11A	I.C. 7404	101340-001	9
6A, 7B	I.C. 7406	101341-001	2
1K, 3D, 9L	I.C. 7408	104240-001	3
4F, 5L, 8B, 8H, 8L	I.C. 7410	101342-001	5

6.0 DRAWINGS

6.13 LOGIC B10 PCBA (Continued)
PART NUMBER 107348 REV

REFERENCE DESIGNATOR	DESCRIPTION	PART NUMBER	QTY
1A 6B	I.C. 7414	101343-001	2
3F, 4E, 7K, 8E	I.C. 7420	101344-001	4
3L, 9D, 9H	I.C. 7474	102295-001	3
9E, 10E, 12D, 12K	I.C. 7485	101347-001	4
7F	I.C. 7486	101348-001	1
1B, 1E, 1H, 2B, 2H, 3C, 3H, 4C, 4L, 6C, 6E, 6F, 7L, 8C, 8K, 9K, 10B, 11H	I.C. 74107	101349-001	18
11E	I.C. 74174	101353-001	1
11F	I.C. 74LS244	103342-001	1
5D, 5E, 5F, 5H, 5K, 7D, 9C, 9F, 11C, 12E, 12H	I.C. 74393	101355-001	11
3A-5A	I.C. 75452	101356-001	3
12F	I.C. 2114	105694-001	1

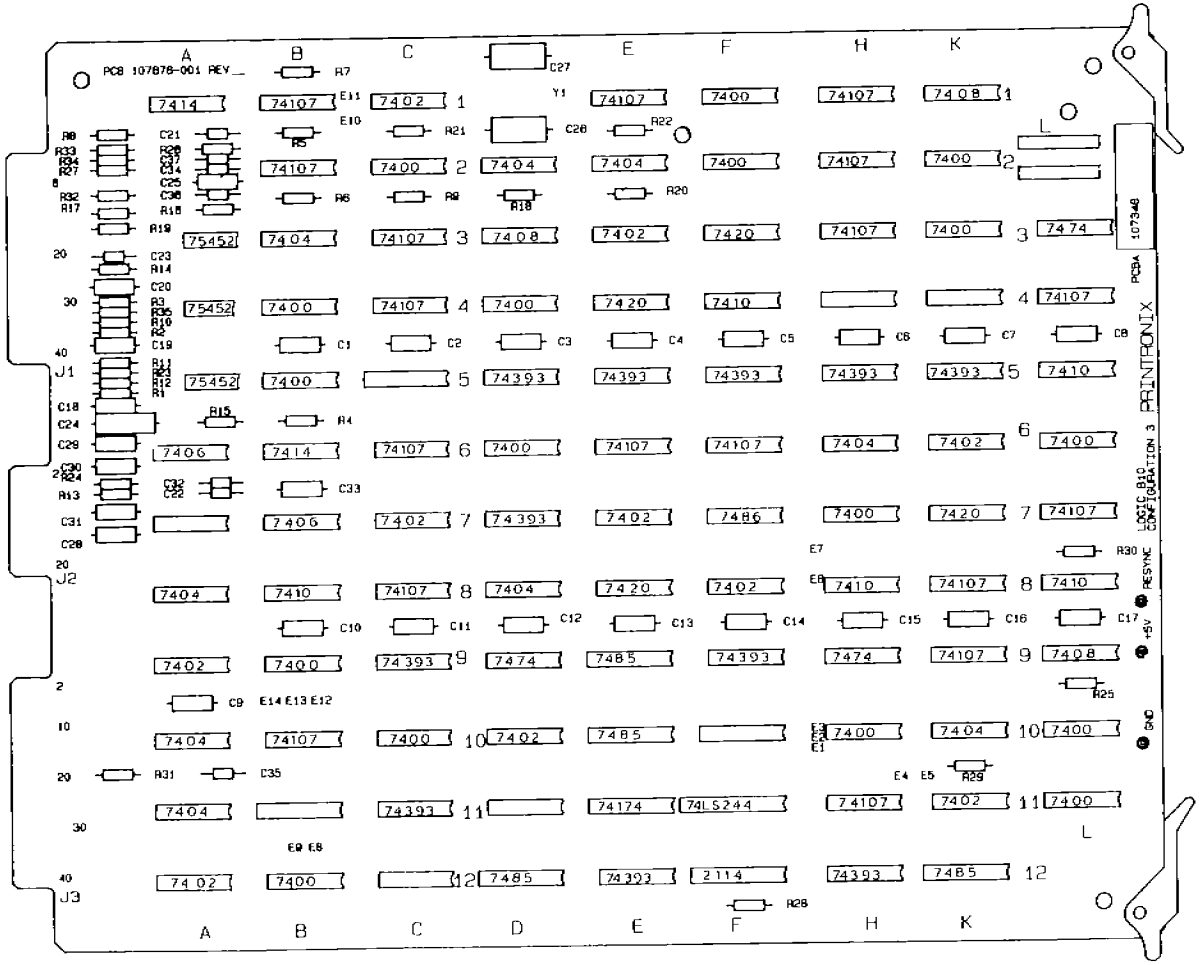

PRINTRONIX	
LOGIC B10 PCBA	
DRAWING NO. 107348 REV A	SHEET NO. 1 of 1

JUMPER TABLE		LOCATION SHT	LOCATION ZONE
W3	SKIP OVER PERF 1 INCH	9	D3, D4
W1, W3	SKIP OVER PERF 5/6 INCH		
W2, W3	SKIP OVER PERF 2/3 INCH		
W1, W2, W3	SKIP OVER PERF 1/2 INCH		
W4	DOUBLE SPEED PLOT	5	A3
W6	PAPER MOTION DETECTOR ENABLE (OUT=DISABLE)	4	C3
W7	DISABLE EVFU (OUT=ENABLE)	7	C7
W8	8 LINES/INCH VERTICAL DENSITY SELECTED	3	B5
W9	ALTERNATE LINES/INCH ENABLE WITH 8 LPI SELECTED. DEFAULT=10 LPI (SEE E-JUMPERS BELOW)	3	B4
W10, W14	P150 OPERATION	5, 6	C7, A6, D8, A4
W11, W13	P300 OPERATION		
W5, W11, W13	P600 OPERATION		
W12	IN=MOVE 1 LINE BINARY CT=000 OUT=MOVE 1 LINE BINARY CT=001	7	C7
W14	P300 OPERATION WITH LOGIC A1 THROUGH A5	8	A6
E1-E2	7 DOT ROW CHARACTERS (IN ETCH)	8	A4
E2-E3	8 DOT CHARACTERS, ETCH BETWEEN E1-E2 MUST BE CUT	8	A4
E4-E5	9 LPI (REPLACING 10 LPI)	8	A7
E6-E7	MOD PLOT	8	B6
E8-E9	ALTERNATE FORM LENGTH	9	C5
E10-E11	8 LPI SWITCH DISABLED WHEN ON-LINE (IN ETCH)	3	B6
E12-E13	STOP ON FAULT (CUT E13-E14 ETCH)	4	A5
E13-E14	STOP 2 INCHES AFTER FAULT (IN ETCH)	4	A5

SPARE CIRCUITS		
DEVICE	LOCATION	OUTPUT PIN
7400	2K	11
7404	2E 8A 11A 3B	8 4 2 8
7414	1A	2, 6
75452	4A	3

I.C. GND / PWR PIN		
DEVICE	GND	+5V
7400	7	14
7402	7	14
7404	7	14
7406	7	14
7408	7	14
7410	7	14
7414	7	14
7420	7	14
7474	7	14
7485	8	16
7486	7	14
74107	7	14
74174	8	16
74LS244	10	20
74393	7	14
75452	4	8
2114	9	18

CONNECTORS	
J1	CONTROL PANEL
J2	POWER
J3	A-B INTERFACE
2L	HAMMER RESET TIMER

LAST REF DESIG USED	DESIG NOT USED
C37	
R35	
TP3	
Y1	

PRINTRONIX

LOGIC B10 SCHEMATIC

DRAWING NO. 107348 REV B

SHEET NO. 1 of 9

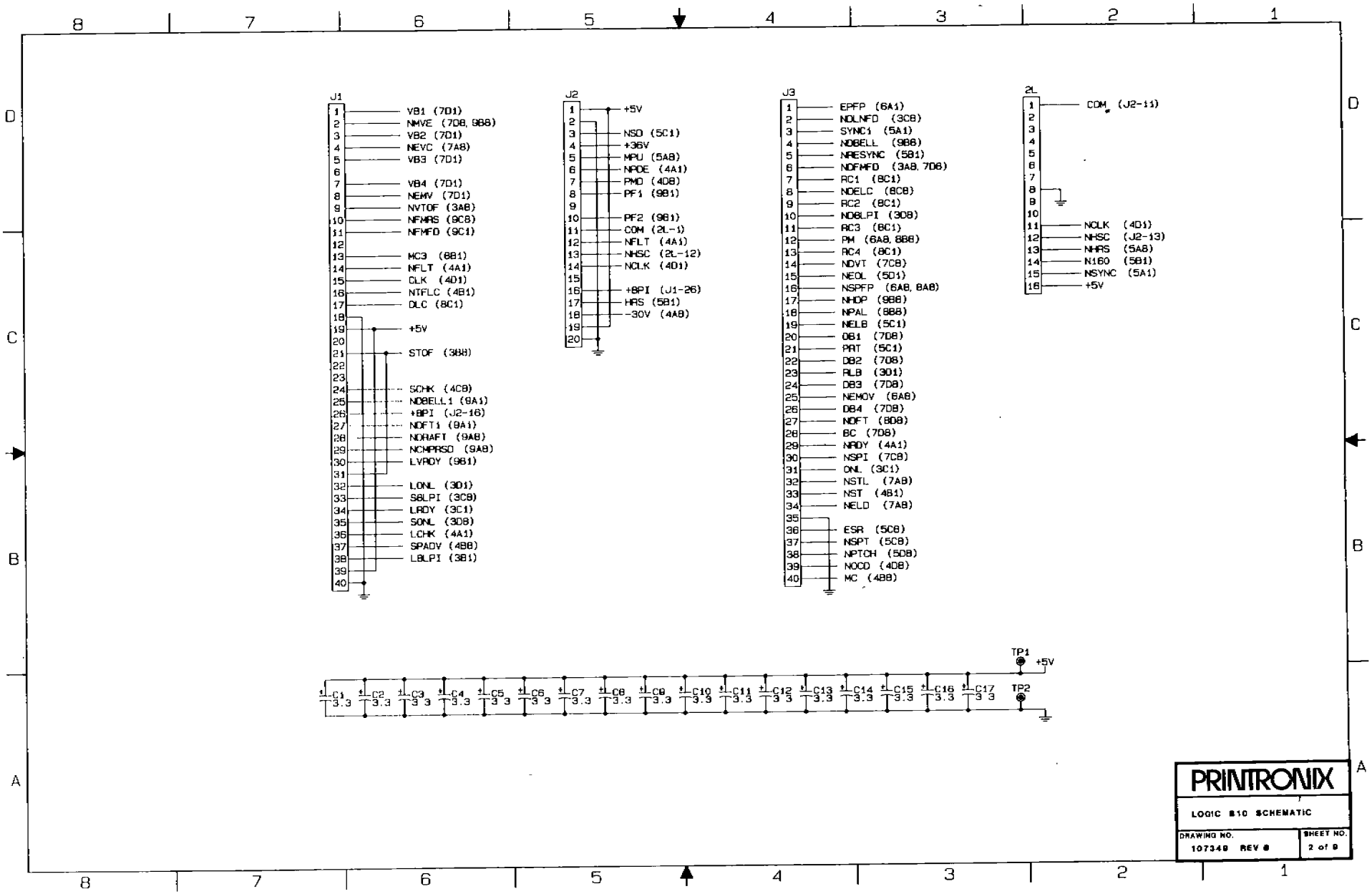
J1
1 VB1 (7D1)
2 NMVE (7D8, 9B8)
3 VB2 (7D1)
4 NEVC (7A8)
5 VB3 (7D1)
6
7 VB4 (7D1)
8 NEMV (7D1)
9 NVTOF (3A8)
10 NFMRS (9C8)
11 NFMFD (9C1)
12
13 MC3 (8B1)
14 NFLT (4A1)
15 CLK (4D1)
16 NTFLC (4B1)
17 DLC (8C1)
18
19 +5V
20
21 STOF (3B8)
22
23
24 SCHK (4C8)
25 NDBELL1 (9A1)
26 +8PI (J2-16)
27 NDFT1 (9A1)
28 NDRAFT (9A8)
29 NCMPRSO (9A8)
30 LVRDY (9B1)
31
32 LONL (3D1)
33 S8LPI (3C8)
34 LRDY (3C1)
35 SONL (3D8)
36 LCHK (4A1)
37 SPADV (4B8)
38 LBLPI (3B1)
39
40
J2
1 +5V
2
3 NSO (5C1)
4 +36V
5 MPU (5A8)
6 NPDE (4A1)
7 PMD (4D8)
8 PF1 (9B1)
9
10 PF2 (9B1)
11 COM (2L-1)
12 NFLT (4A1)
13 NHSC (2L-12)
14 NCLK (4D1)
15
16 +8PI (J1-26)
17 HRS (5B1)
18 -30V (4A8)
19
20
J3
1 EPFP (6A1)
2 NDLNFD (3C8)
3 SYNC1 (5A1)
4 NDBELL (9B8)
5 NRESYNC (5B1)
6 NDFMFD (3A8, 7D8)
7 RC1 (8C1)
8 NDELC (8C8)
9 RC2 (8C1)
10 ND8LPI (3D8)
11 RC3 (8C1)
12 PM (6A8, 8B8)
13 RC4 (8C1)
14 NDVT (7C8)
15 NEOL (5D1)
16 NSPFP (6A8, 8A8)
17 NHDP (9B8)
18 NPAL (8B8)
19 NELB (5C1)
20 DB1 (7D8)
21 PRT (5C1)
22 DB2 (7D8)
23 RLB (3D1)
24 DB3 (7D8)
25 NEMOV (6A8)
26 DB4 (7D8)
27 NDFT (8D8)
28 BC (7D8)
29 NRDY (4A1)
30 NSPI (7C8)
31 ONL (3C1)
32 NSTL (7A8)
33 NST (4B1)
34 NELD (7A8)
35
36 ESR (5C8)
37 NSPT (5C8)
38 NPTCH (5D8)
39 NOCD (4D8)
40 MC (4B8)
2L
1 COM (J2-11)
2
3
4
5
6
7
8
9
10
11 NCLK (4D1)
12 NHSC (J2-13)
13 NHRS (5A8)
14 N160 (5B1)
15 NSYNC (5A1)
16 +5V
TP1 +5V
TP2
C1 3.3
C2 3.3
C3 3.3
C4 3.3
C5 3.3
C6 3.3
C7 3.3
C8 3.3
C9 3.3
C10 3.3
C11 3.3
C12 3.3
C13 3.3
C14 3.3
C15 3.3
C16 3.3
C17 3.3
PRINTRONIX
LOGIC 810 SCHEMATIC
DRAWING NO. 107348 REV 0
SHEET NO. 2 of 9

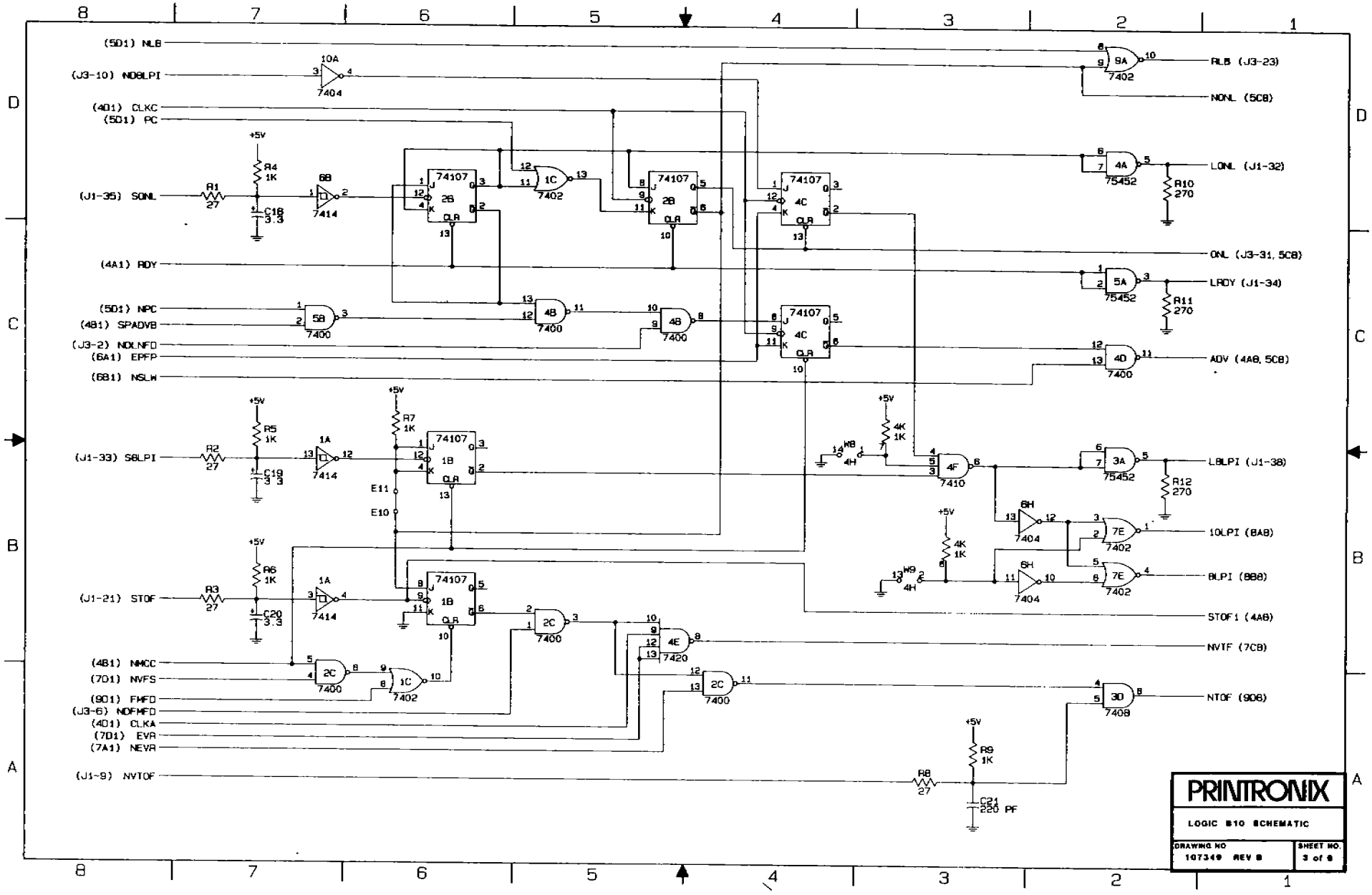
(5D1) NLB
(J3-10) NDBLPI
(4D1) CLKC
(5D1) PC
(J1-35) SONL
(4A1) RDY
(5D1) NPC
(4B1) SPADVB
(J3-2) NDLNFD
(6A1) EPFP
(6B1) NSLW
(J1-33) SBLPI
(J1-21) STOF
(4B1) NMCC
(7D1) NVFS
(9D1) FMFD
(J3-6) NDFMFD
(4D1) CLKA
(7D1) EVR
(7A1) NEVR
(J1-9) NVTOF
RLB (J3-23)
NONL (5C8)
LONL (J1-32)
ONL (J3-31, 5C8)
LRDY (J1-34)
ADV (4A8, 5C8)
LBLPI (J1-38)
10LPI (8A8)
BLPI (8B8)
STOF1 (4A8)
NVTF (7C8)
NTOF (9D8)
PRINTRONIX
LOGIC B10 SCHEMATIC
DRAWING NO 107349 REV B
SHEET NO. 3 of 8

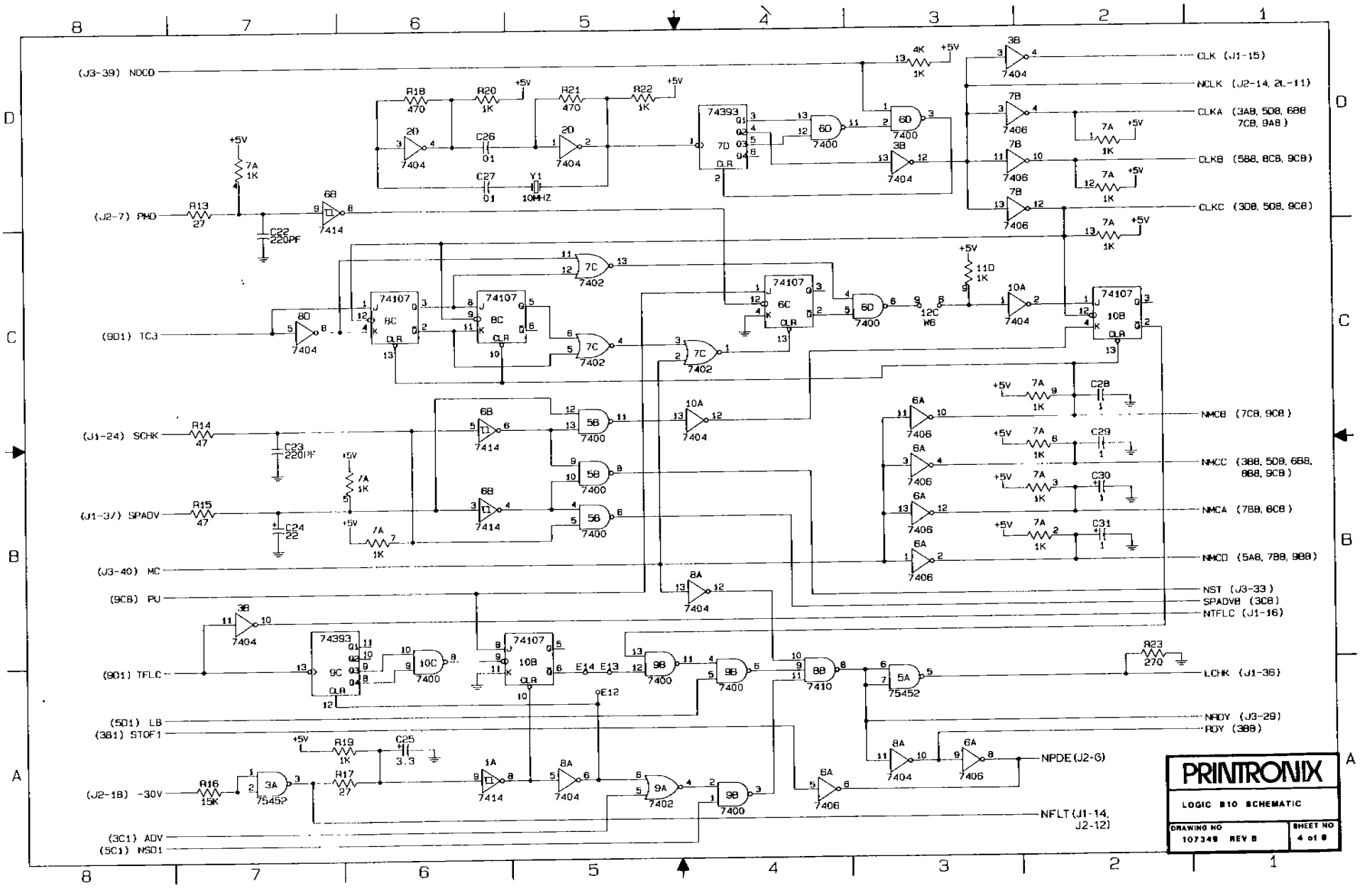
(J3-39) NDCD
(J2-7) PMD
(9D1) TCJ
(J1-24) SCHK
(J1-37) SPADV
(J3-40) MC
(9C8) PU
(9D1) TFLC
(5D1) LB
(3B1) STOF1
(J2-18) -30V
(3C1) ADV
(5C1) NSD1
CLK (J1-15)
NCLK (J2-14, 2L-11)
CLKA (3A8, 5D8, 6B8 7C8, 9A8)
CLKB (5B8, 8C8, 9C8)
CLKC (3D8, 5D8, 9C8)
NMCB (7C8, 9C8)
NMCC (3B8, 5D8, 6B8, 8B8, 9C8)
NMCA (7B8, 8C8)
NMCD (5A8, 7B8, 9B8)
NST (J3-33)
SPADVB (3C8)
NTFLC (J1-16)
LCHK (J1-36)
NRDY (J3-29)
RDY (3B8)
NPDE (J2-6)
NFLT (J1-14, J2-12)
PRINTRONIX
LOGIC B10 SCHEMATIC
DRAWING NO 107349 REV B
SHEET NO 4 of 8

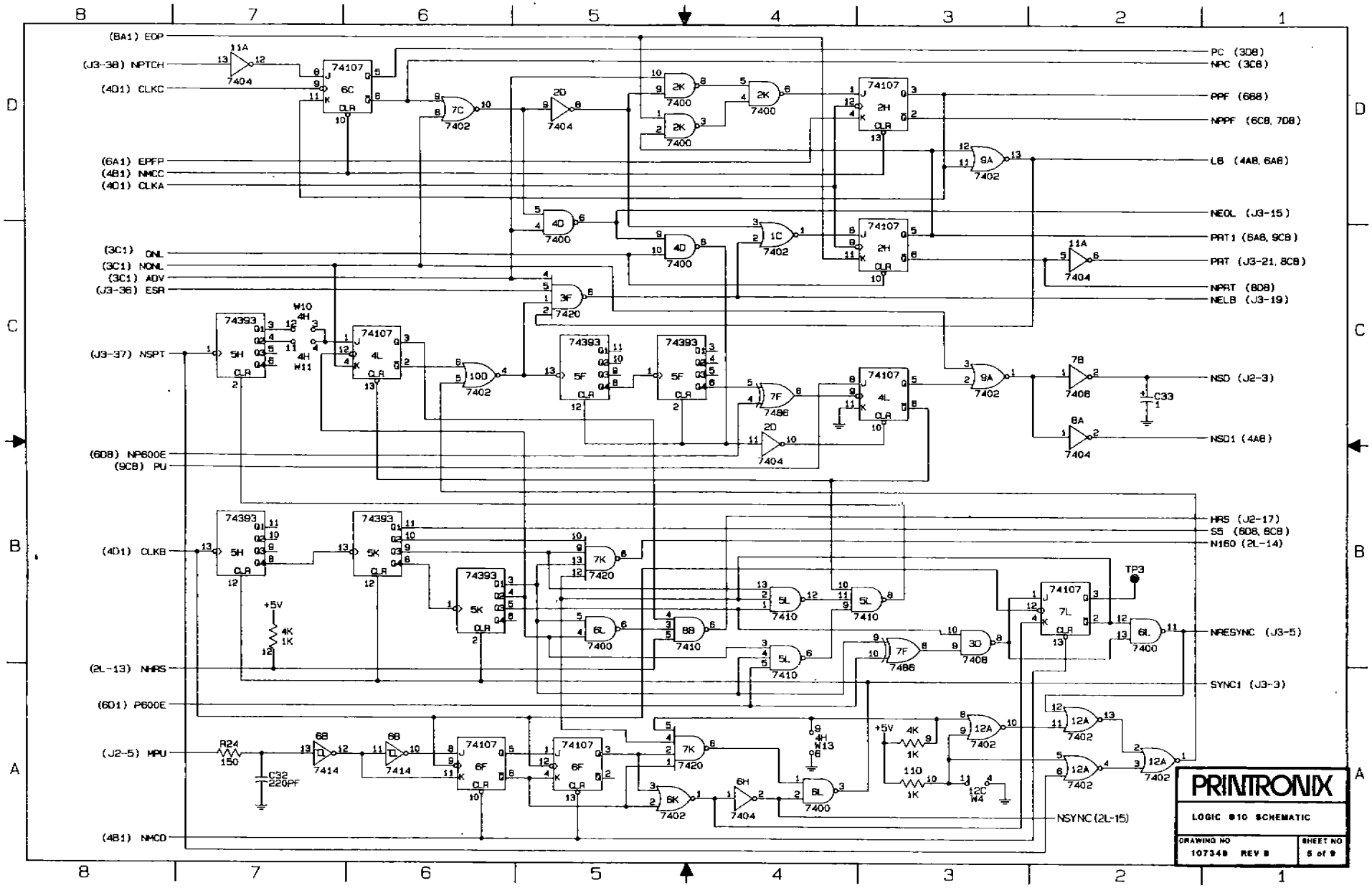
(8A1) EOP
(J3-38) NPTCH
(4D1) CLKC
(6A1) EPFP
(4B1) NMCC
(4D1) CLKA
(3C1) QNL
(3C1) NONL
(3C1) ADV
(J3-36) ESR
(J3-37) NSPT
(6D8) NP600E
(9C8) PU
(4D1) CLKB
(2L-13) NHRS
(6D1) P600E
(J2-5) MPU
(4B1) NMCD
PC (3D8)
NPC (3C8)
PPF (6B8)
NPPF (6C8, 7D8)
LB (4A8, 6A8)
NEOL (J3-15)
PRT1 (6A8, 9C8)
PRT (J3-21, 8C8)
NPRT (8D8)
NELB (J3-19)
NSD (J2-3)
NSD1 (4A8)
HRS (J2-17)
S5 (6D8, 8C8)
N160 (2L-14)
NRESYNC (J3-5)
SYNC1 (J3-3)
NSYNC (2L-15)
TP3
PRINTRONIX
LOGIC 810 SCHEMATIC
DRAWING NO 107348 REV B
SHEET NO 5 of 9

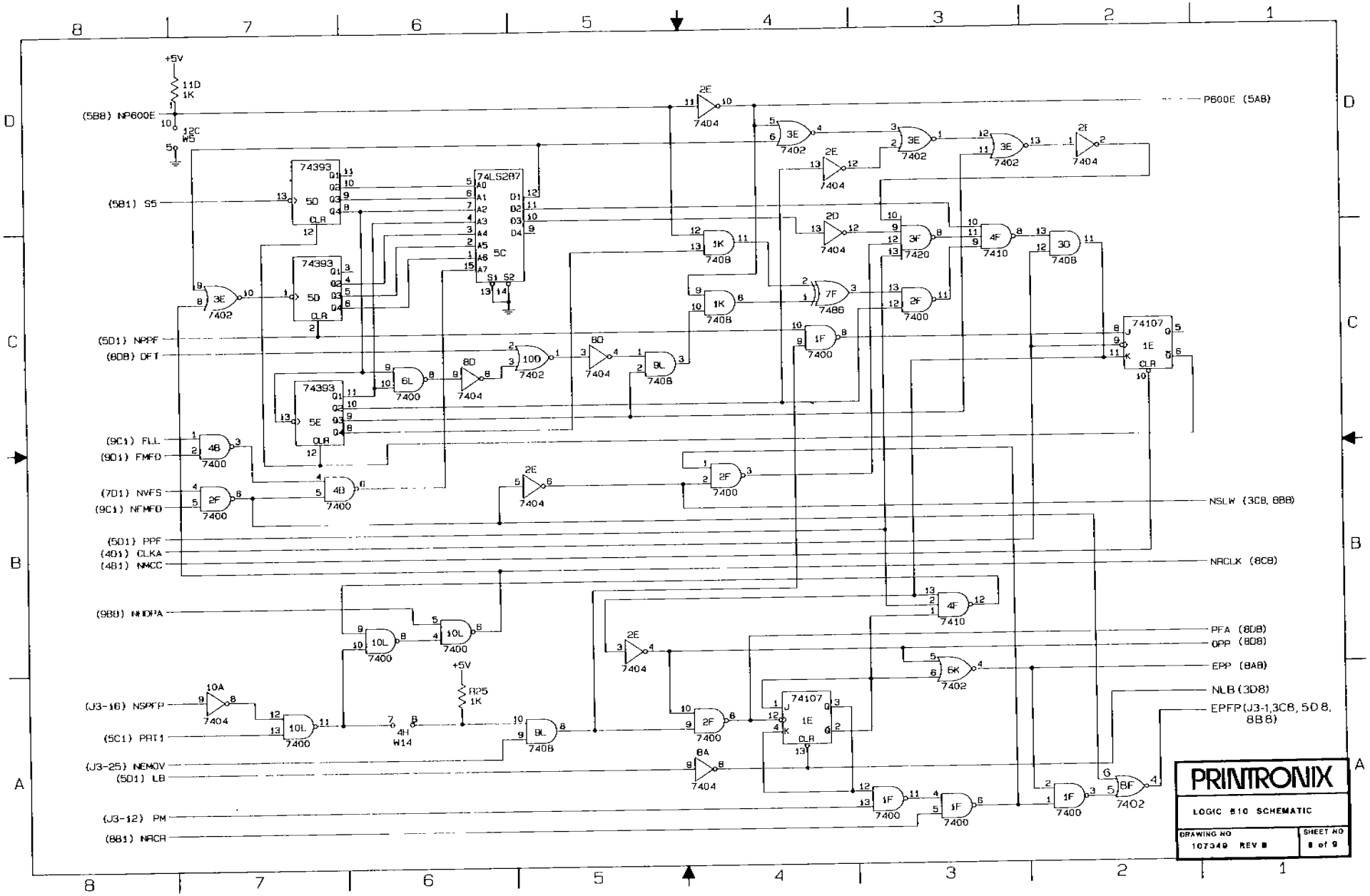
(5B8) NP600E
(5B1) S5
(5D1) NPPF
(8D8) DFT
(9C1) FLL
(9D1) FMFD
(7D1) NVFS
(9C1) NFMFD
(5D1) PPF
(4D1) CLKA
(4B1) NMCC
(9B8) NHDPA
(J3-16) NSPFP
(5C1) PRT1
(J3-25) NEMOV
(5D1) LB
(J3-12) PM
(8B1) NACR
P600E (5A8)
NSLW (3C8, 8B8)
NRCLK (8C8)
PFA (8D8)
OPP (8D8)
EPP (8A8)
NLB (3D8)
EPFP (J3-1,3C8, 5D8, 8B8)
PRINTRONIX
LOGIC 810 SCHEMATIC
DRAWING NO 107349 REV B
SHEET NO 8 of 9

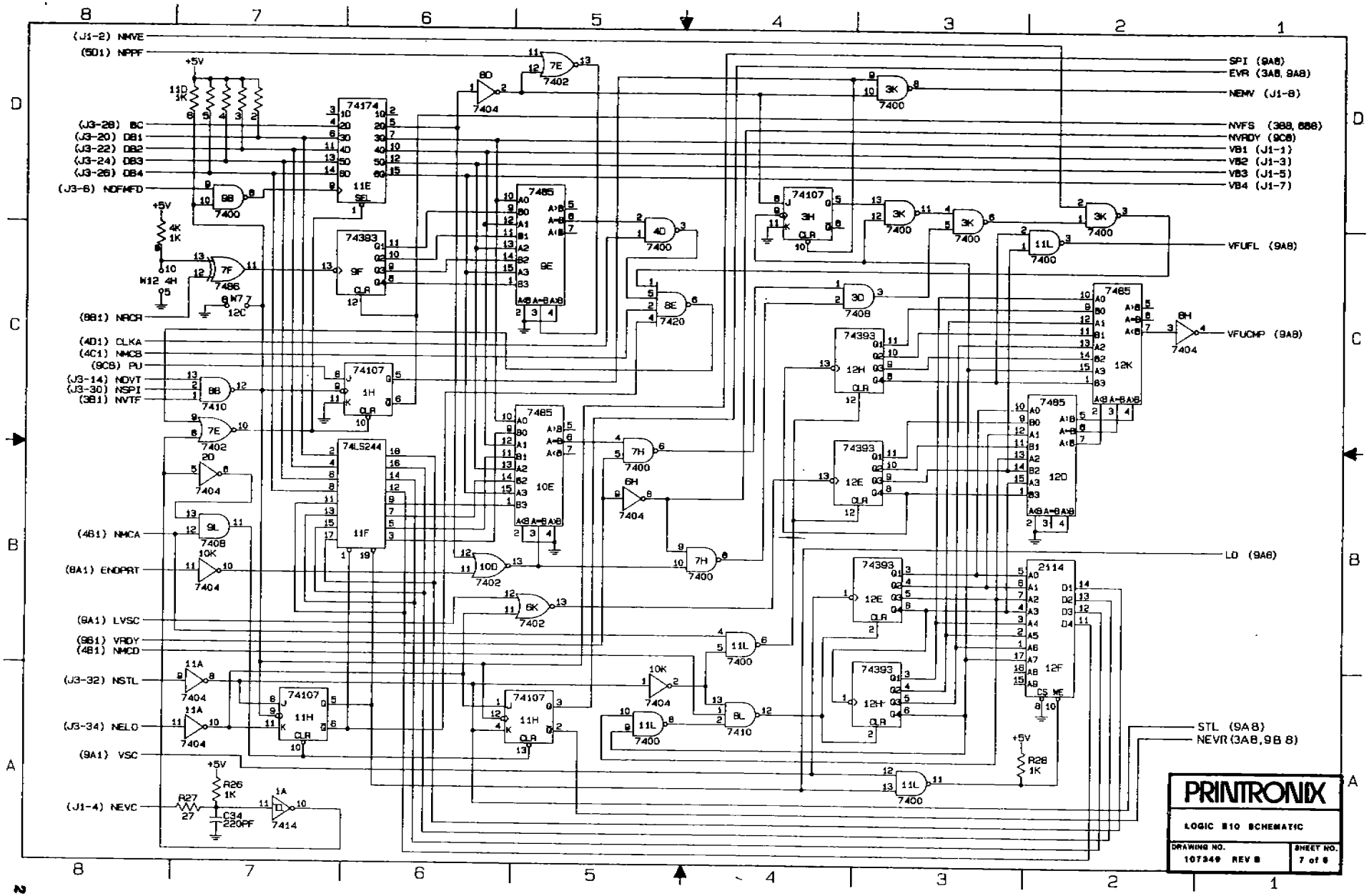
(J1-2) NMVE
(501) NPPF
(J3-28) BC
(J3-20) DB1
(J3-22) DB2
(J3-24) DB3
(J3-26) DB4
(J3-6) NDFMFD
(881) NRCR
(4D1) CLKA
(4C1) NMCB
(9C8) PU
(J3-14) NDVT
(J3-30) NSPI
(381) NVTF
(481) NMCA
(8A1) ENDPRT
(9A1) LVSC
(981) VRDY
(481) NMCD
(J3-32) NSTL
(J3-34) NELD
(9A1) VSC
(J1-4) NEVC
SPI (9A8)
EVR (3A8, 9A8)
NEMV (J1-8)
NVFS (388, 888)
NVRDY (9C8)
VB1 (J1-1)
VB2 (J1-3)
VB3 (J1-5)
VB4 (J1-7)
VFUFL (9A8)
VFUCMP (9A8)
LD (9A8)
STL (9A8)
NEVR (3A8, 9B 8)
PRINTRONIX
LOGIC 810 SCHEMATIC
DRAWING NO. 107349 REV B
SHEET NO. 7 of 8

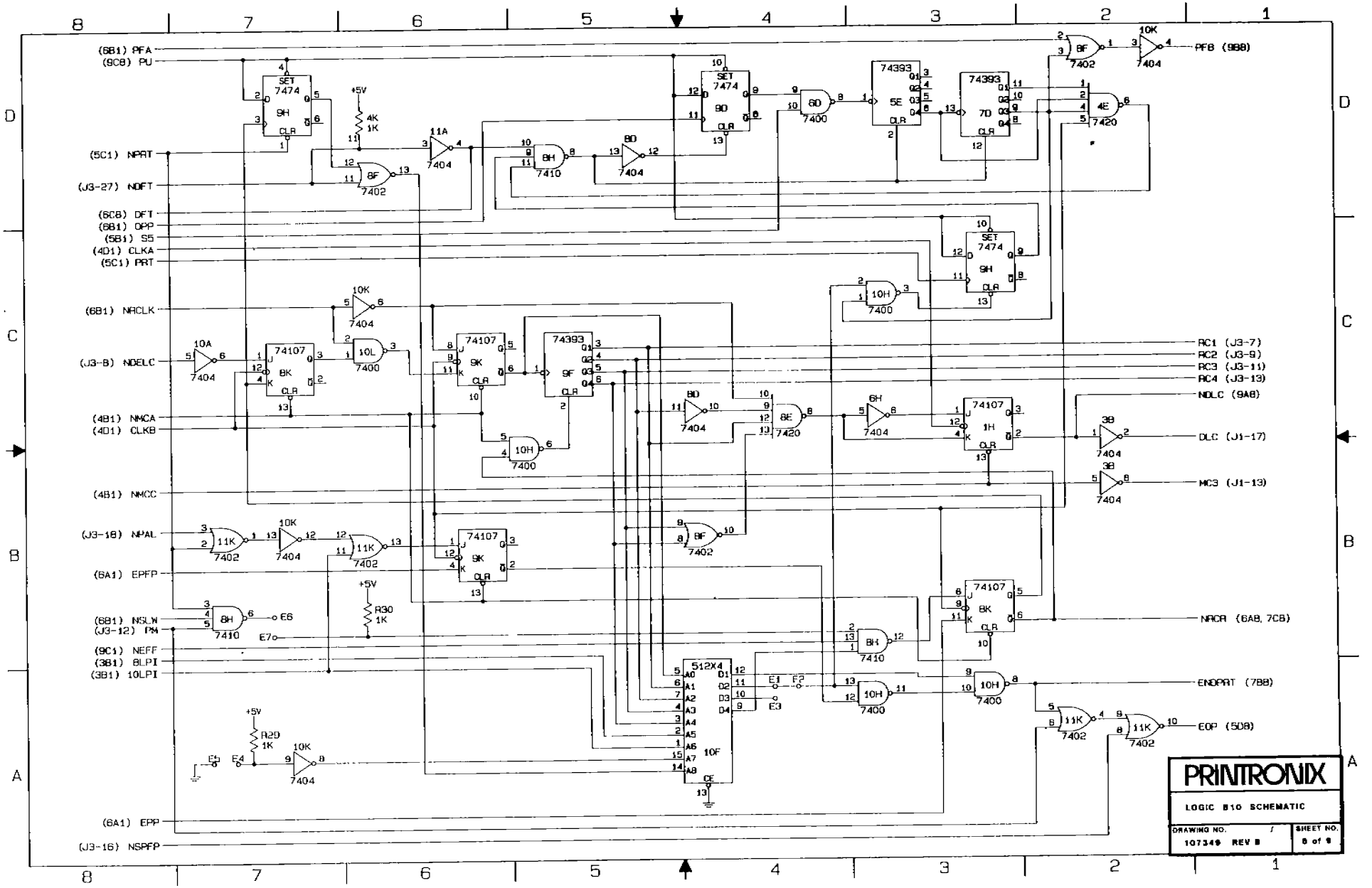
(6B1) PFA
(9C8) PU
(5C1) NPRT
(J3-27) NDFT
(6C8) DFT
(6B1) DPP
(5B1) S5
(4D1) CLKA
(5C1) PRT
(6B1) NACLK
(J3-8) NDELC
(4B1) NMCA
(4D1) CLKB
(4B1) NMCC
(J3-18) NPAL
(6A1) EPFP
(6B1) NSLW
(J3-12) PM
(9C1) NEFF
(3B1) 8LPI
(3B1) 10LPI
(6A1) EPP
(J3-16) NSPFP
PFB (9B8)
RC1 (J3-7)
RC2 (J3-9)
RC3 (J3-11)
RC4 (J3-13)
NDLC (9A8)
DLC (J1-17)
MC3 (J1-13)
NACR (6A8, 7C8)
ENDPRT (7B8)
EOP (5D8)
PRINTRONIX
LOGIC 810 SCHEMATIC
DRAWING NO. 107349 REV B
SHEET NO. 8 of 9

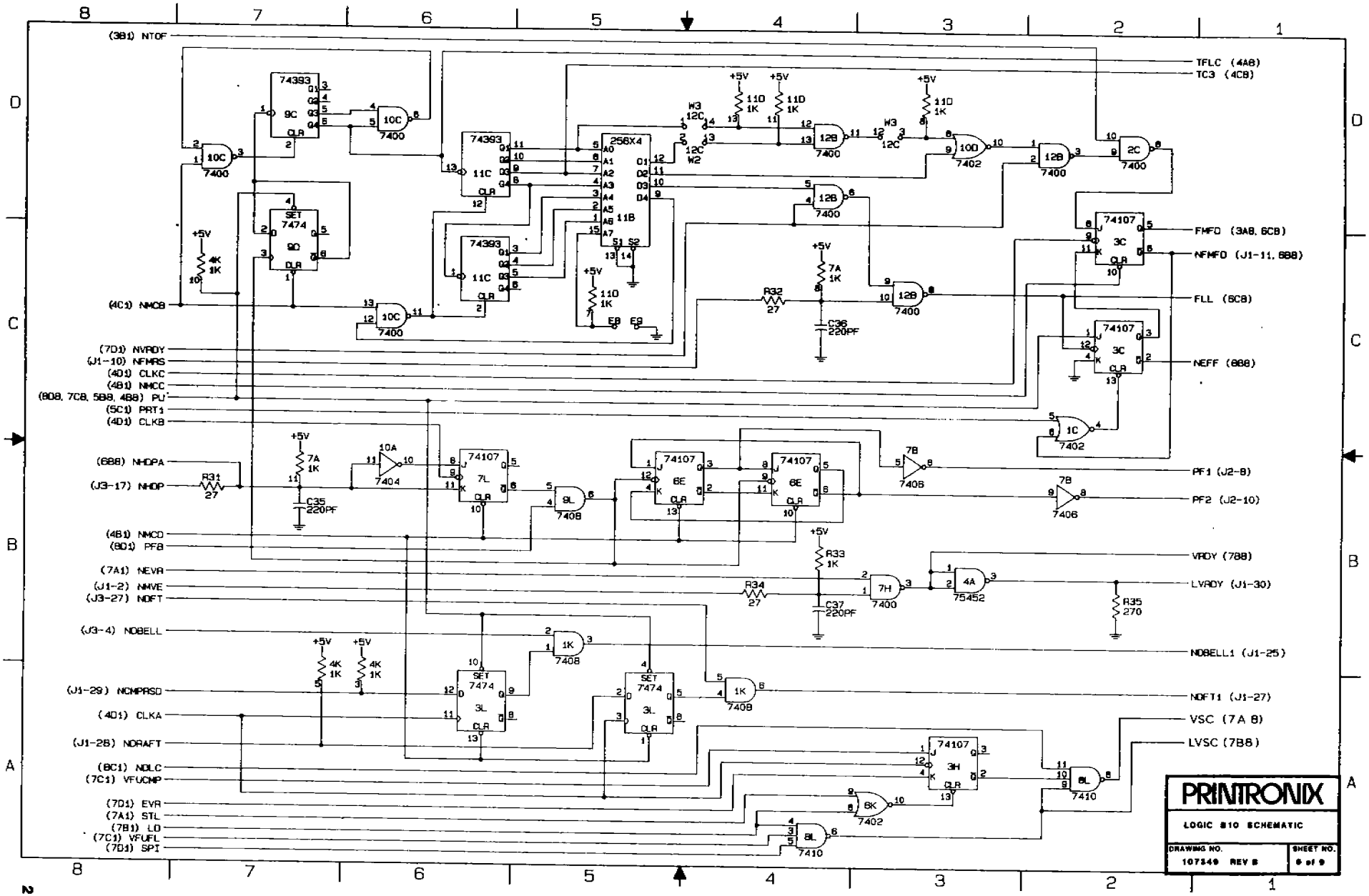
(3B1) NTOF
TFLC (4A8)
TC3 (4C8)
(4C1) NMCB
(7D1) NVRDY
(J1-10) NFMRS
(4D1) CLKC
(4B1) NMCC
(B08, 7C8, 5B8, 4B8) PU
(5C1) PRT1
(4D1) CLKB
FMFD (3A8, 6C8)
NFMFD (J1-11, 6B8)
FLL (6C8)
NEFF (8B8)
(6B8) NHOPA
(J3-17) NHOP
PF1 (J2-8)
PF2 (J2-10)
(4B1) NMCD
(8D1) PFB
(7A1) NEVR
(J1-2) NMVE
(J3-27) NOFT
VRDY (7B8)
LVRDY (J1-30)
(J3-4) NOBELL
NOBELL1 (J1-25)
(J1-29) NCMPRSD
(4D1) CLKA
(J1-28) NDRAFT
NOFT1 (J1-27)
VSC (7A 8)
LVSC (7B8)
(8C1) NDLC
(7C1) VFUCMP
(7D1) EVR
(7A1) STL
(7B1) LD
(7C1) VFUFL
(7D1) SPI
PRINTRONIX
LOGIC 810 SCHEMATIC
DRAWING NO. 107349 REV B
SHEET NO. 6 of 9

7.0 MNEMONICS

7.1 MNEMONIC DICTIONARY HAMMER DRIVER PCBA

The following list presents and defines, in alphabetical order, the mnemonics used in logic diagrams contained in the basic printer. Mnemonics are positive true unless noted. Initial letter N denotes negative -true. Numeric mnemonics are found at the end of the alphabetic list.

COM..... Compare Line (Serial Data to Hammerbank Shift Register)

GND..... Ground

HC1 - 44..... Drive for Hammer Coils 1 through 44
HMC..... Hammer Master Clear
HRS..... Hammer Reset
NHCK..... Hammer Clock (Low Active) - transfers data from hammer shift resistors to hammer data latches
NHRS, NHRS1..... Hammerbank Reset (Low Active)
NHSC..... Hammerbank Shift Clock (Low Active) - clocks serial data from COM line into the hammer shift registers

5 HL..... +5 VDC for Hammer Data Latches
+5 V..... +5 VDC from Power Supply
+28 VH..... +28 VDC Supply for Hammer Coils

7.0 MNEMONICS

7.2 MNEMONIC DICTIONARY LOGIC A PCBA

The following list presents and defines, in alphabetical order, the mnemonics used in logic diagrams contained in the basic printer. Mnemonics are positive true unless noted. Initial letter "N" denotes negative - true. Numeric mnemonics are found at the end of the alphabetic list.

ACP.....Alternate Compressed Print

BC.....Binary Count (DBS True Starts Binary Count Operation in the EVFU)

CLKA, CLKB.....Clock (2 MHz System Clock)
COM.....Compare Line (Serial Dots to Hammerbank Shift Registers)
CP.....Compressed Data Signal

DB1 - 4.....Data Bits 1 through 4 - applied to the EVFU on logic B
DB1A - 8A.....Data Bits 1 through 8 - applied to print buffer and control decodes
DC1 - 4.....Dot Column Count bits 1 through 4
DFT.....Draft Mode Signal activated by Draft Switch
DR.....Data Request
DSTB.....Delayed Strobe - for paper instruction and control codes

ECR.....End Carriage Return
EDT.....End Data Transfer - signals the end of data transfer for the present line
EPFP.....End Paper Feed Pulse - signals the end of paper motion
ESR.....End Static RAM - signals the end of the static RAM interrogation

HDP.....Half Dot Plot - enabled when jumper W9 is in place
HMC.....Hammer Master Clear
HRES.....High Resolution - active for half dot plot

IACK.....Acknowledge (Interface)
ICBY.....Busy (Interface)
ICPE.....Printer Enable (Ready for Centronics Interface)
ICSTB, IDSTB.....Data Strobes (for Centronics and Dataproducts Interface)
IDR.....Data Request (Interface)
IONL.....Online (Interface)
IPI.....Paper Instruction (Interface)
IRDY.....Ready (Interface)

7.0 MNEMONICS

7.2 MNEMONIC DICTIONARY LOGIC A PCBA (Continued)

MC.....Master Clear (Power Up Start)

NCLK.....Clock (2 MHz System Clock)
NCRR.....Carriage Return (Low Active) - derived from NDCRR
NDCRR.....Decoded Carriage Return
NDBELL.....Decoded Bell Character (not used)
NDELC.....Decoded Elongated Character
NDFMFD.....Decoded Form Feed
NDFT.....Draft Mode Signal (Low Active)
NDLNFD.....Decoded Line Feed
NDLNFDA.....Decoded Line Feed
NDSTB1.....Data Strobe - derived internally from ICSTB or IDSTB
NDUL.....Decoded Underline
NDVT.....Decoded Vertical Tab
ND8LPI.....Decoded 8LPI
NELD.....End Load Command (for EVFU)
NEOL.....End of Line
NESR.....End of Static RAM
NGO.....Go - derived from NESR and a SYNC pulse
NEMOV.....Early Move
NHCK.....Hammer Clock (Low Active) - transfers data from hammer shift register to hammer data latches
NHDP.....Half Dot Plot (Low Active)
NHSC.....Hammerbank Shift Clock (Low Active) - clock serial data from COM line into the hammer shift registers
NMCA, NMCB.....Master Clear (Power Up Start)
NPAL.....Print Additional Line (Active when Printing Underlines on Lowercase with Descenders)
NPIC.....Paper Instruction Command (Low Active) enabled when jumper W5 is installed
NPM.....Plot Mode (Low Active)
NPT.....Printable Character - active when DB6A and/or DB7A are true
NPTCH.....Printable Character - derived from NPT at the next DSTB
NP600E.....P600 Enable - active when jumpers W11 and W14 are missing
NRDY.....Ready - active when there are no printer faults
NRESYCH.....Resync - indicates that the shuttle is beginning a left to right excursion
NRLB.....Ready Load Bumper - active while the printer is online and in the load buffer state
NSDB8.....High Vertical Resolution Bit
NSP.....Space Code
NSPFP, NSPFP1.....Start Paper Feed Pulse - begin paper motion

7.0 MNEMONICS

7.2 MNEMONIC DICTIONARY LOGIC A PCBA (Continued)

NSPI.....Paper Instruction Switches
NSPNST.....Self-Test
NSPT.....Start Print
NST.....Self-Test - begins self-test when CHECK and paper advance are pressed simultaneously
NSTB3.....Strobe Time 3 - used to generate IACK
NSTCLR.....Self-Test Clear - active while ACK flip-flop is reset
NSTL.....Start load - begins the loading of EVFU memory
NSWCP.....Compressed Print Switch
NSWDFT.....Draft Mode Switch

ONL, ONLA.....Online

PI.....Paper Instruction
PIC.....Paper Instruction Command - active when jumper W5 is installed
PM, PM1.....Plot Mode
PRT, PRTA.....Print - indicates the print state
PS.....Polarity Select - reverses interface polarity when jumper W7 is installed
PUA.....Pull Up Resistor
P/FCNTR.....Phase Fire Counter - available for the phase fire option
RC1 - 4.....Row Counter Bits 1 through 4
RLB.....Ready Line Buffer

SDB1 - 6.....Serial Data Bits 1 through 6
SDB6B, SDB7A,
SDB7B, SDB8, SDB8S. Selectable Data Bits 6, 7 and 8
SDUL.....Shift Underline
SRADD0 - 7.....Static RAM Address 0 through 7
SRCLK.....Static RAM Clock
SRCRST.....Static RAM Counter Reset
ST.....Self-Test Mode Switch
SOV.....Alternate Character Set Select
SYNC.....Sync Pulse

7.0 MNEMONICS

7.3 MNEMONIC DICTIONARY LOGIC B PCBA

The following list presents and defines, in alphabetical order, the mnemonics used in logic diagrams contained in the basic printer. Mnemonics are positive true unless noted. Initial letter N denotes negative - true. Numeric mnemonics are found at the end of the alphabetic list.

ADV.....Paper Advance

BC.....Binary Count (DB5 True starts Binary Count Operation in the EVFU

CLK, CLKA, CLKBD...Clock (2MHz System Clock)

DB1 - 4.....Data Bits 1 Through 4 to EVFU
DLC.....Decoded Long Characters

ENDPRT.....End Print - occurs after last dot row in character line
EOP.....End of Page
EPP.....Even Paper Pulse
EPFP.....End Paper Feed Pulses
ESR.....End Static RAM
EVR.....Enable EVFU Ready

FLL.....Forms Last Line (line 65 of 11 inch form)
FMFD.....Form Feed

HRS.....Hammer Reset

LB.....Load Buffer
LCHK.....Lamp Drive for Check Switch Lamp
LD.....Load Buffer
LONL.....Lamp Drive for Online Switch Lamp
LVRDY.....EVFU Ready
LVSC.....EVFU Shift Clock
LRDY.....Lamp Drive for Top of Form Switch Lamp (EVFU Loaded)
L8LPI.....Lamp Drive for 8LPI Switch Lamp

MC, MC3.....Master Clear (Power Up Start)
MPU.....Magnetic Pick Up - output of MPU assembly converted to TTL levels

N160.....Time Out (Hammer Reset Board)
NCLK.....Clock (2 Mhz System Clock)
NCMPRSD.....Low Active Compressed Print
NDBELL, NDBELL1...Decoded Bell (not used)
NDELC.....Decoded Elongated Character
NDFMFD.....Decoded Form Feed
NDFT, NDFT1.....Draft
NDLC.....Delayed Last Count (EVFU - RC = 0)
NDLNFD.....Decoded Line Feed

7.0 MNEMONICS

7.3 MNEMONIC DICTIONARY LOGIC B PCBA (Continued)

NDRAFT.....Draft
NDVT.....Decoded Vertical Tab
ND8LPI.....Decoded 8 LPI
NEFF.....End of Form Feed (resets the form feed flip-flop)
NELB.....End Load Buffer (stops the load buffer state and starts the print state)
NEMOV.....Early Move
NEOL.....End of Load - activated by paper Motion Command
NELD.....End Load - stops the EVFU load and illuminates the top-of-form lamp
NEMV.....Enable Mechanical VFU (not used)
NEVC.....EVFU Count
NEVR.....EVFU Ready - indicates successful EVFU memory load
NFLT.....Fault - indicates plates open, paper out or power supply voltage out of tolerance
NFMFD.....Form Feed Command
NFMRS.....Form Feed Reset (from MVFU), not used
NHDPA.....Half Dot Plot
NLB.....Load Buffer
NMCA, NMCB,
NMCC, NMCD.....Master Clear
NMVE.....Mechanical VFU Enable (not used)
NOCD.....Output Clock Disable
NONL.....Online
NPAL.....Print Additional Lines - active for lowercase and underline printing
NPC.....Printable Character - the output of the printable character flip-flop
NPDE.....Paper Drive Enables
NPPF.....Paper Feed (Print State Control)
NPRT.....Print - output of the print flip flop. active during the print state
NPTCH.....Printable Character
NP600E.....P600 Enable - active when jumper W11 and W14 are missing (not active for P300)
NRCLK.....Row Counter Clock
NRCR.....Row Counter Reset
NRESYNC.....Resync - generated when a sync pulse is missing
NRDY.....Ready - active when there are no printer faults
NSD, NSD1.....Shuttle Drive - activates the shuttle drive motor and the ribbon motors
NSLW.....Slew - active for paper motion operations
NSPFP.....Start Paper Feed Pulse
NSPI.....Paper Instruction Strobe

7.0 MNEMONICS

7.3 MNEMONIC DICTIONARY LOGIC B PCBA (Continued)

NSPT.....Start Print - occurs during shuttle turnaround and clocks shuttle up to speed logic
NST.....Self-Test - active when CHECK and PAPER ADVANCE switches are pressed simultaneously
NSTL.....Start Load - begins the loading of EVFU memory
NSYNC.....Sync Pulses
NTFLC.....Top-of-Form Count - keep track of row count
NTOF.....Top-of-Form Command - used to set the top-of-form flip-flop
NVFS.....Vertical Format Slew - initiates high speed operation of paper feed logic
NVRDY.....
NVTF.....Vertical Format Top-of-Form - used with EVFU
NVTOF.....Vertical Format Top-of-Form from FLS Option (or MVFU)

ONL.....Online
OPP.....Odd Paper Pulse

PC.....Printable Character (Latched)
PFA, PFB.....Used to Enable Paper Feed Pulses 1 and 2
PF1, PF2.....Paper Feed Pulses 1 and 2
PM.....Plot Mode
PMD.....Paper Motion Detector
PPF.....Paper Feed (Print State Control)
PRT, PRT1.....Print - the output of the print flip-flop
PU.....Pull Up Resistor
P600E.....P600 Enable - active when jumpers W11 and W14 are missing (not active for P300)

RC1 - 4.....Row Counter Bits 1 through 4
RDY.....Ready - indicates there are no printer faults
RLB.....Reset Load Buffer

SCHK.....Check Switch Signal
SONL.....Online Switch Signal
SPI.....Stroked Paper Instuction
SPADV, SPADVB.....Paper Advance Switch Signal
STL.....Start Load - initiates loading of EVFU memory
STOF, STOF1.....Top-of-Form Switch Signal
SYNC1.....Sync Pulses
S5.....Stage 5 (16 uSec Clock Counts)
S8LPI.....8 LPI Switch Signal

TFLC.....Top-of-Form Final Line Count

7.0 MNEMONICS

7.3 MNEMONIC DICTIONARY LOGIC B PCBA (Continued)

VB1 - 4.....EVFU Data Bits 1 through 4
VFUCMP.....VFU Comparator
VFUFL.....VFU Full
VRDY.....VFU Ready (Memory Loaded)
VSC.....VFU Shift Register Clock

8LPI.....Active when 8 LPI Switch is pressed if jumper W9 is not Installed
10LPI.....Active when 8 LPI Switch is pressed if jumper W9 is Installed

8.0 OPTION (RS232)

8.1 RS232 PCBA
PART NUMBER 104374 REV K

REFERENCE DESIGNATOR	DESCRIPTION	PART NUMBER	QTY
	PCB RS232	105076-001	1
C2, C3	Capacitor, Tantalum, 3.3u, 15V, 20%	101362-001	2
C1,C4,C5,C11,C13, C14,C15,C16,C17, C19,C20,C21,C24, C28,C29,C30	Capacitor, 22uf, 15V, 20%	101362-005	16
C6,C7,C8,C9,C10,C18	Capacitor, Ceramic, .00047, 100V, 10%	102291-472	6
C12,C22,C25,C26	Capacitor, CK05 Series, .01uf, 100V, 10%	103355-103	4
C31	Capacitor, CK05 Series, 47, 000pf,50V,10%	103355-473	1
Y1	Crystal 4.9152 MHZ	101375-003	1
CR3,CR4,CR5,CR6, CR7,CR8	Diode 1N4004	101336-001	6
CR1,CR2	Zener Diode 1N5349B	101371-001	2
CR10,CR11,CR12	Light Emitting Diode	101593-001	3
CR9	Diode, Switching, Small Signal	102872-001	1
CR13	Diode, Zener, 1/2W, IN5266	101894-008	1
1K	IC LM339	101358-001	1
9A	IC SN75188	102026-001	1
9B	IC SN75189A	102027-001	1
5E	IC UART	102028-002	1
11A-B,11A-C	IC OPTO COUPLERS	102131-001	2
10D,8E,7C	IC 74LS107	102302-001	3
3B, 3C	RAM, STATIC, 1024x4	102976-001	2
11E	IC 74LS122	103280-001	1
6B,7E,9E,1F,6H,8H, 10H,10K	IC 74LS00	103299-001	8
4A,4B,2F,6F,8F,5K, 8D	IC 74LS02	103319-001	7
1C,7D,9D,7F,9F,6K, 11K,	IC 74LS04	103330-001	7
8C,2H	IC 74LS10	103332-001	2
10B	IC 74LS14	103333-001	1

8.0 OPTION (RS232) (Continued)

8.1 RS232 PCBA
PART NUMBER 104374 REV K

REFERENCE DESIGNATOR	DESCRIPTION	PART NUMBER	QTY
5B,3E	IC 74LS20	103334-001	2
6D	IC 74LS42	103335-001	1
10F	IC 74LS86	103336-001	1
4C,5C,2D,9H	IC 74LS157	103337-001	4
2A	IC 74LS240	103341-001	1
3A,3H,4H,5H	IC 74LS244	103342-001	4
6C,10C,3D,4D,5D,7H	IC 74LS393	103343-001	6
8K	IC 74LS153	103379-001	1
10E,11F,11H,9K	IC 74LS74	103932-001	4
2E,6E,3F	IC 74LS193	103969-001	3
R12,R13,R14,R33	Resistor, 1K, 1/4W, 5%	101337-103	4
R2,R3,R6,R18,R19, R22,R24,R27, R31,R32,R34	Resistor, 10K, 1/4W, 5%	101337-104	11
R8,R9	Resistor, 100K, 1/4W, 5%	101337-105	2
R28,R29,R30	Resistor, 180 , 1/4W, 5%	101337-182	3
R11	Resistor, 2.2K, 1/4W, 5%	101337-223	1
R21,R25,R23	Resistor, 22K, 1/4W, 5%	101337-224	3
R16	Resistor, 3.3K, 1/4W, 5%	101337-333	1
R17	Resistor, 33K, 1/4W, 5%	101337-334	1
R26	Resistor, 470K, 1/4W, 5%	101337-475	1
R20	Resistor, 7.5K, 1/4W, 5%	101337-753	1
R7,R10	Resistor, 330 , 1/4W, 5%	101337-332	2
R5	Resistor, 1K, 5W, 10%	101398-103	1
R4	Resistor, 330 , 5W, 10%	101398-332	1
R15	Resistor, Metal Film, 182 , 1/4W 1%	101399-182	1
R1	Resistor, 680 , 2W, 5%	101421-682	1
Q1	Transistor, 2N4236	102868-001	1
Q2,Q3	Transistor, MPS-A06	103372-001	2
SW1	Toggle Switch	101592-001	1
1H,3K,4K,4E	Resistor Network IC SIP	103385-002	4
E1,E2,8B,5A,E8	Plug, Jumper, Wire Wrap Terminal	104658-002	12

8.0 OPTION (RS232) (Continued)

8.1 RS232 PCBA
PART NUMBER 104374 REV K

REFERENCE DESIGNATOR	DESCRIPTION	PART NUMBER	QTY
E3,E4,E7	Plug, Jumper, Wire Wrap Terminal	104658-003	3
E5,E6	Plug, Jumper, Wire Wrap Terminal	104658-001	2
11D	Plug, Jumper, Wire Wrap Terminal	104658-004	1
3K,4K	Plug, Jumper, Wire Wrap Terminal	104658-006	2
4F	Plug, Jumper, Wire Wrap Terminal	104658-005	1
11C	Plug, Jumper, Wire Wrap Terminal	104658-008	1
9C	Plug, Jumper, Wire Wrap Terminal	104658-009	1
5E	IC Socket, 40 Pin	102253-001	1
-12V,+12V,+5V,DATA READY, DSTB, REC'D DATA, N CLK, GND	Turret Terminal	101380-001	8
	Injector Ejector	101382-001	2
	Pin Roll	101319-010	2
	Schematic, RS232	104379-000	REF
2B,2C	Socket, IC. 18 Pin	105080-001	2
	RS232 Jumper Configuration List	104975-000	REF
10A	IC, OPTO-Coupler, 6N136	105889-001	1
11AA,10A	Wire, Solid, 30 AWG	101617-001	A/R

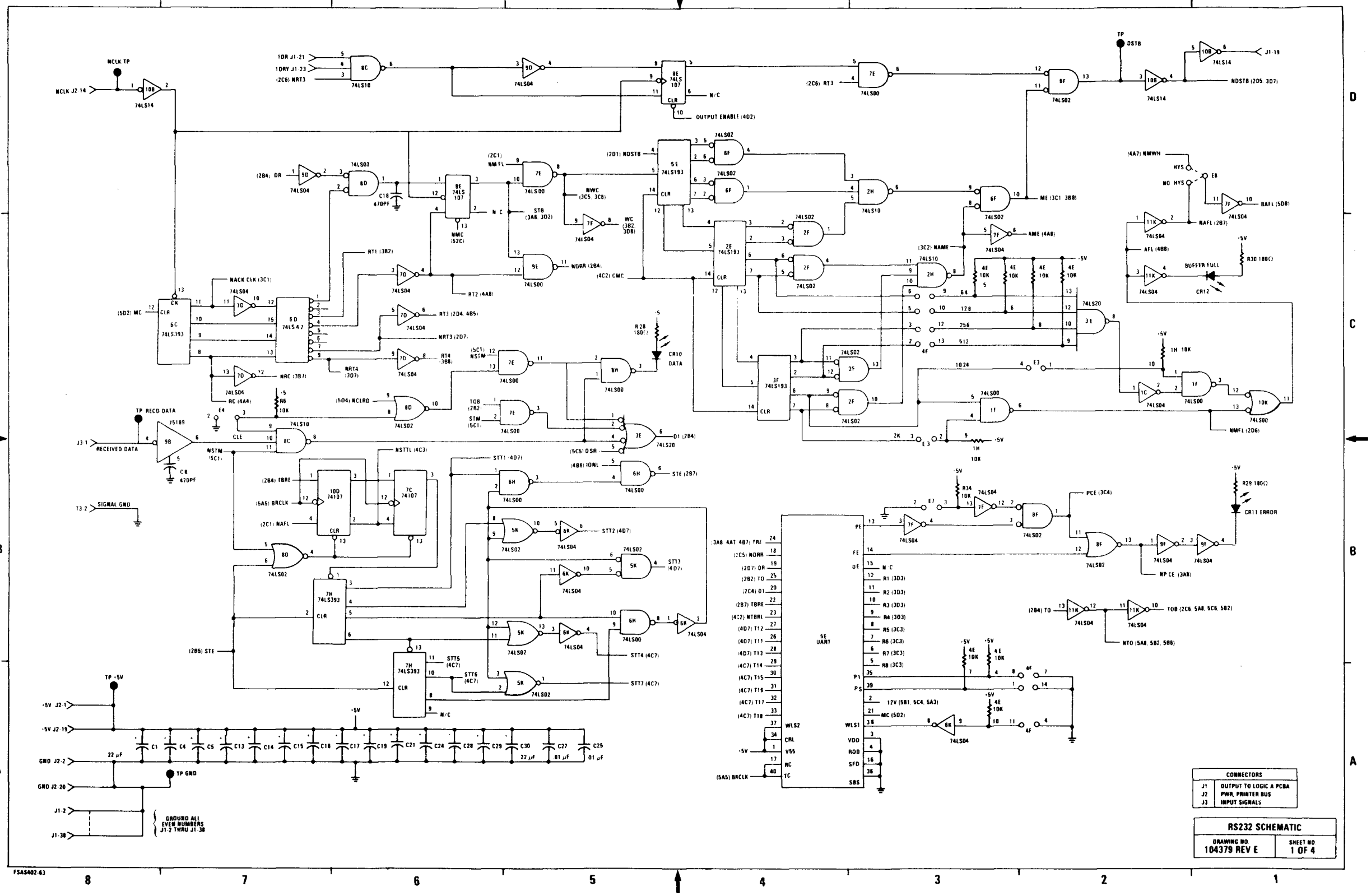
NCLK TP
NCLK J2-14
74LS14
1DR J1-21
1DRY J1-23
(2C6) NRT3
74LS10
74LS04
8E 74LS 107
N/C
OUTPUT ENABLE (4D2)
(2C6) RT3
74LS00
74LS02
TP DSTB
NDSTB (2D5, 3D7)
J1-19
(2B4) DR
C18 470PF
(2C1) NMFL
NWC (3C5, 3C6)
STB (3A8, 3D2)
WC (3B2, 3D8)
NMC (5ZC)
NDRR (2B4)
(2D1) NDSTB
6E 74LS193
2E 74LS193
3F 74LS193
(4C2) CMC
(4A7) NMWH
HYS
NO HYS
E8
BAFL (5D8)
NAFL (2B7)
AFL (4B8)
BUFFER FULL
CR12
R30 180Ω
ME (3C1, 3B8)
AME (4A8)
(3C2) NAME
RT1 (3B2)
RT2 (4A8)
RT3 (2D4, 4B5)
NRT3 (2D7)
RT4 (3B8)
NRT4 (3D7)
NACK CLK (3C1)
(5D2) MC
6C 74LS393
6D 74LS 42
NRC (3B7)
RC (4A4)
R6 10K
(5C1) NSTM
(5D4) NCLRD
TOB (2B2)
STM (5C1)
R28 180Ω
CR10 DATA
TP RECD DATA
J3-1
RECEIVED DATA
75189
9B
C8 470PF
CLE
8C
D1 (2B4)
(5C5) DSR
(4B8) IONL
STE (2B7)
NSTM (5C1)
NSTTL (4C3)
STT1 (4D7)
(2B4) FBRE
(5A5) BRCLK
(2C1) NAFL
10D 74107
7C 74107
T3-2
SIGNAL GND
STT2 (4D7)
STT3 (4D7)
7H 74LS393
(2B5) STE
STT5 (4C7)
STT6 (4C7)
STT4 (4C7)
STT7 (4C7)
N/C
5E UART
(3A8, 4A7, 4B7) TRE
(2C5) NDRR
(2D7) DR
(2B2) TO
(2C4) D1
(2B7) TBRE
(4C2) NTBRL
(4D7) T12
(4D7) T11
(4D7) T13
(4C7) T14
(4C7) T15
(4C7) T16
(4C7) T17
(4C7) T18
WLS2
CRL
V55
RC
TC
(5A5) BRCLK
PE
FE
OE
R1 (3D3)
R2 (3D3)
R3 (3D3)
R4 (3D3)
R5 (3C3)
R6 (3C3)
R7 (3C3)
R8 (3C3)
P1
PS
12V (5B1, 5C4, 5A3)
MC (5D2)
WLS1
VDD
ROD
SFD
SBS
PCE (3C4)
R29 180Ω
CR11 ERROR
NP CE (3A8)
(2B4) TO
TOB (2C6, 5A8, 5C6, 5B2)
NTO (5A8, 5B2, 5B6)
1H 10K
NMFL (2D6)
TP +5V
+5V J2-1
+5V J2-19
GND J2-2
GND J2-20
J1-2
J1-38
TP GND
GROUND ALL EVEN NUMBERS J1-2 THRU J1-38
C1 C4 C5 C13 C14 C15 C16 C17 C19 C21 C24 C28 C29 C30 C27 C25
22 µF
.01 µF
CONNECTORS
J1 OUTPUT TO LOGIC A PCBA
J2 PWR, PRINTER BUS
J3 INPUT SIGNALS
RS232 SCHEMATIC
DRAWING NO. 104379 REV E
SHEET NO. 1 OF 4
FSAS402-83

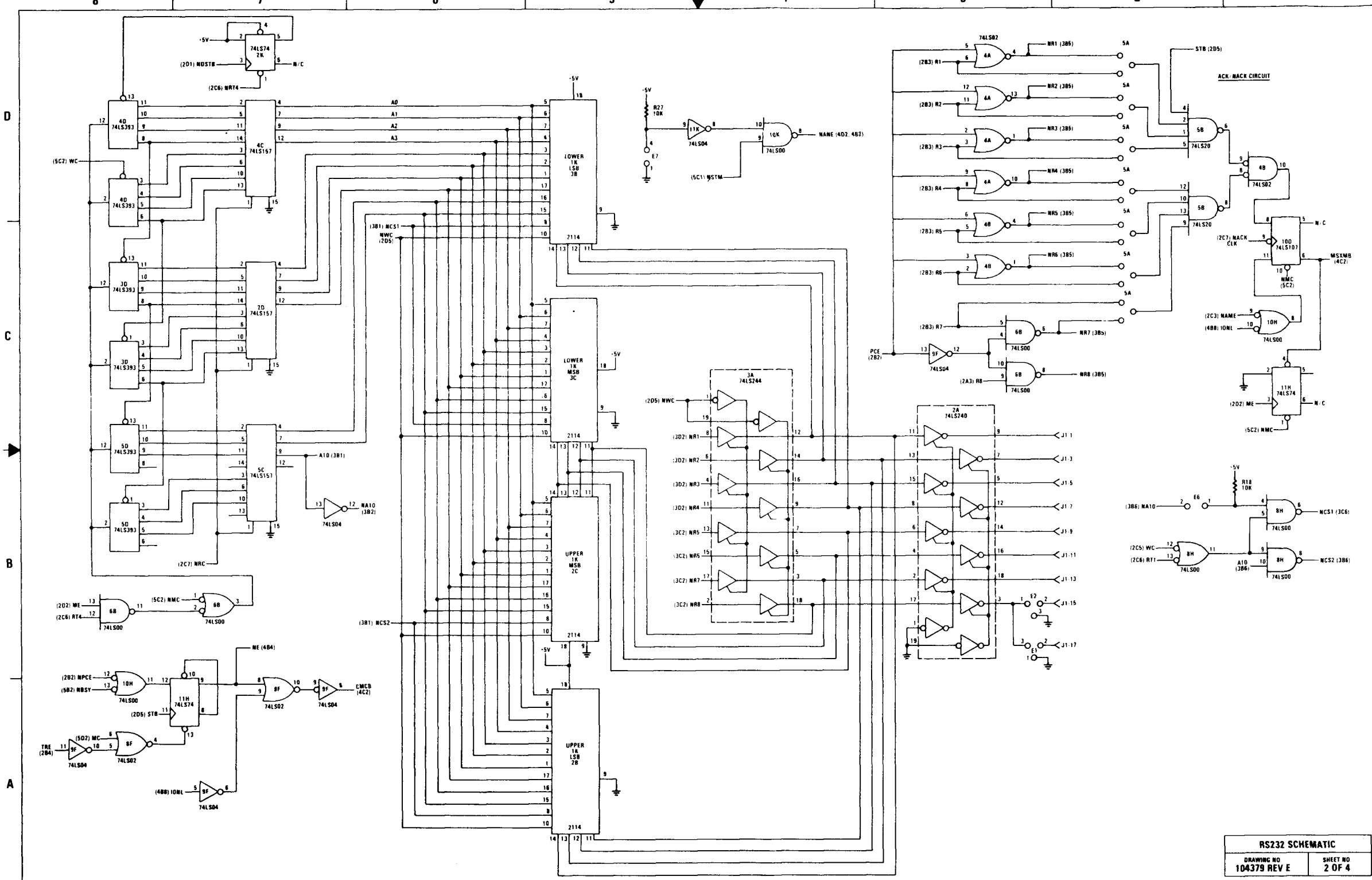
ACK/NACK CIRCUIT
RS232 SCHEMATIC
DRAWING NO. 104379 REV E
SHEET NO. 2 OF 4
LOWER 1K LSB 3B
LOWER 1K MSB 3C
UPPER 1K MSB 2C
UPPER 1K LSB 2B
2114
74LS74 2K
4D 74LS393
3D 74LS393
5D 74LS393
4C 74LS157
2D 74LS157
5C 74LS157
3A 74LS244
2A 74LS240
74LS02
74LS20
74LS04
74LS00
74LS10
11H 74LS74
R27 10K
R18 10K
(2D1) MDSTB
(2C6) NRT4
(5C2) WC
(3B1) NCS1
NWC (2D5)
(3B1) NCS2
A10 (3B1)
NA10 (3B2)
(2C7) NRC
(2D2) ME
(2C6) RT4
(5C2) NMC
(2B2) NPCE
(5B2) NBSY
(2D5) STB
NE (4B4)
CMCB (4C2)
TRE (2B4)
(5D2) MC
(4B8) IONL
(2D5) NWC
(3D2) NR1
(3D2) NR2
(3D2) NR3
(3D2) NR4
(3C2) NR5
(3C2) NR6
(3C2) NR7
(3C2) NR8
(5C1) NSTM
NAME (4D2, 4B2)
(2B3) R1
(2B3) R2
(2B3) R3
(2B3) R4
(2B3) R5
(2B3) R6
(2B3) R7
(2A3) R8
PCE (2B2)
NR1 (3B5)
NR2 (3B5)
NR3 (3B5)
NR4 (3B5)
NR5 (3B5)
NR6 (3B5)
NR7 (3B5)
NR8 (3B5)
STB (2D5)
(2C7) NACK CLK
MSXMB (4C2)
NMC (5C2)
(2C3) NAME
(4B8) IONL
(2D2) ME
(5C2) NMC
(3B6) NA10
NCS1 (3C6)
(2C5) WC
(2C6) RT1
A10 (3B6)
NCS2 (3B6)
J1-1
J1-3
J1-5
J1-7
J1-9
J1-11
J1-13
J1-15
J1-17
E7
E6
E2
E1
FSA5402-64

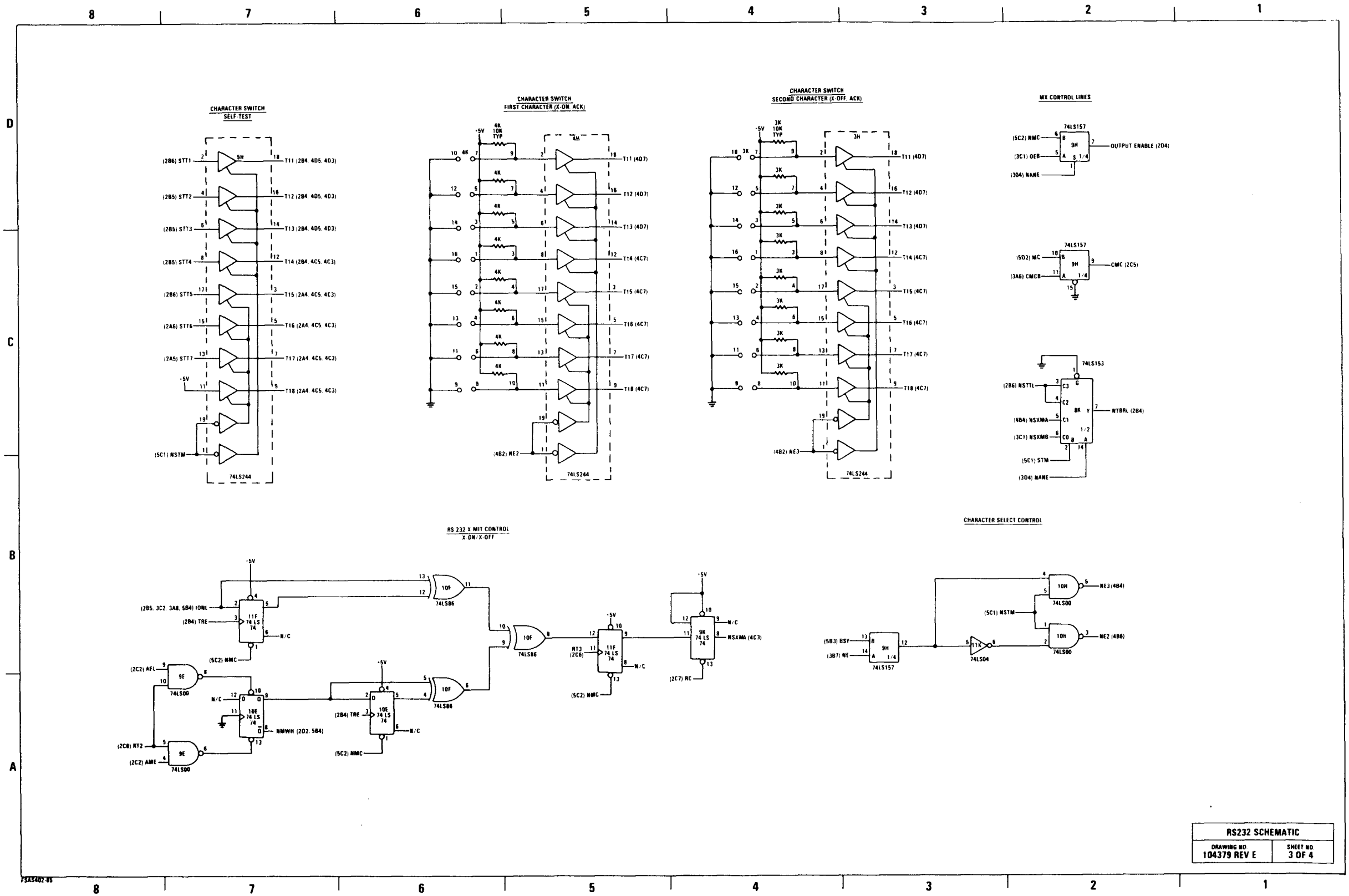

RS232 SCHEMATIC	
DRAWING NO. 104379 REV E	SHEET NO. 3 OF 4

FSAS402-85

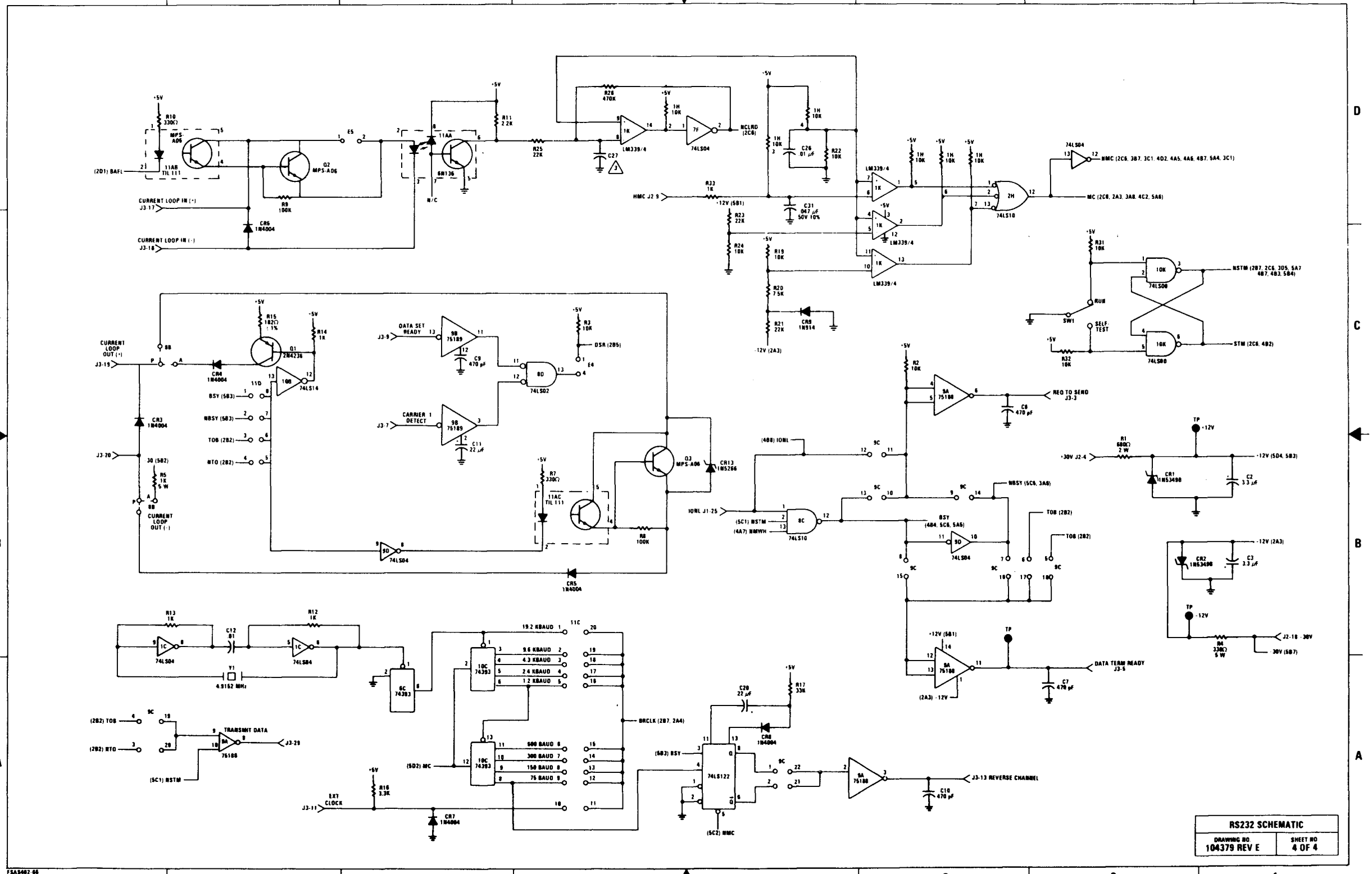
RS232 SCHEMATIC
DRAWING NO
104379 REV E
SHEET NO
4 OF 4
CURRENT LOOP IN (+)
CURRENT LOOP IN (-)
CURRENT LOOP OUT (+)
CURRENT LOOP OUT (-)
DATA SET READY
CARRIER 1 DETECT
TRANSMIT DATA
EXT CLOCK
DATA TERM READY
REQ TO SEND
NMC (2C6, 3B7, 3C1, 4D2, 4A5, 4A6, 4B7, 5A4, 3C1)
MC (2C8, 2A3, 3A8, 4C2, 5A6)
NSTM (2B7, 2C6, 3D5, 5A7, 4B7, 4B3, 5B4)
STM (2C6, 4B2)
RUN
SELF TEST
J3-13 REVERSE CHANNEL
4.9152 MHz
19.2 KBAUD
9.6 KBAUD
4.3 KBAUD
2.4 KBAUD
1.2 KBAUD
600 BAUD
300 BAUD
150 BAUD
75 BAUD
BRCLK (2B7, 2A4)
FSAS402-66