TI 6490.20

NSN 0056-00-472-6000

INSTRUCTION BOOK

M200
MATRIX PRINTER

(SCHEMATICS)

PART OF

FLIGHT SERVICE AUTOMATION SYSTEM

VOLUME III

CONTROLLED
DOCUMENT

CONTRACT DTFA01-81-C-10039

CONTRACTOR

E-SYSTEMS, INC.
GARLAND DIVISION
P.O. BOX 660023

416-21627

1 MAY 1985

MADE FOR

U.S. DEPARTMENT OF TRANSPORTATION

FEDERAL AVIATION ADMINISTRATION

FA 10017, 10018

M200
MATRIX PRINTER
(Schematics)

FA 10017, 10018

M200
MATRIX PRINTER
(SCHEMATICS)

DATE DUE	BORROWER'S NAME	ROOM NUMBER

DPC255015A

SCHEMATICS PACKAGE
MATRIX PRINTER
MODEL M200

© *Dataproducts Corp. 1980*

Dataproducts

6200 CANOGA AVENUE
WOODLAND HILLS, CALIFORNIA 91365

DECEMBER 1980

All rights reserved. No part of this manual may be reproduced without the express permission of Dataproducts Corporation.

The material in this manual is for information purposes and is subject to change without notice.

Dataproducts Corporation assumes no responsibility for any errors which may appear in this manual.

TABLE OF CONTENTS

Figure No.	Title	Page No.
1	Circuit Card Assembly, Centronics-Compatible Interface	1
2	Circuit Card Assembly, Serial Interface	10
3	Circuit Card Assembly, Short Line Interface	18
4	Circuit Card Assembly, Processor	27
5	Circuit Card Assembly, Motor Driver	36
6	Circuit Card Assembly, Wire Driver	40
7	Circuit Card Assembly, Regulator	43
8	Standard Power Supply	45
9	Universal Power Supply	48
10	Control Panel	51
11	Circuit Card Assembly, Mother Board (Wire List)	53

NOTES: (UNLESS OTHERWISE SPECIFIED)

1. ALL RESISTANCE VALUES ARE IN OHMS, 5%, 1/4W.
2. ALL RESISTORS ARE 7.5K.
3. ALL CAPACITANCE VALUES ARE IN UF, +80%, -20%, 50V.
4. ALL CAPACITORS ARE 0.1UF.
5. —o— DENOTES JUMPER WIRE PAD.
6. INTERRUPTED SIGNAL CONNECTIONS ARE CODED BY SHEET AND ZONE (E.G. 7C2 IS SHEET 7 ZONE C2).
7. ON INTEGRATED CIRCUITS: PIN 7 IS 0V, PIN 14 IS +5V.
8. ON INTEGRATED CIRCUITS: U10,16,24,25,28,30,43,44 PIN 8 IS 0V, PIN 16 IS +5V.
9. INTEGRATED CIRCUITS ARE:

815004 (74S472)	MEM1	801531 (74LS10)	U13,55
810059 (74S287)	MEM3	801800 (74LS132)	U14
801529 (74LS04)	U1,27,56	801691 (74LS240)	U18,38,45,52
801584 (74LS02)	U2,41	801716 (74LS244)	U19,21-23,39,51
801540 (74LS74)	U3	801023 (74221)	U28
801534 (74LS20)	U4	801533 (74LS14)	U31-33,49
801536 (74LS32)	U6	801963 (74LS197)	U34,35
801812, (74LS125)	U7	801805 (8304)	U36,53
801614 (2114)	U8,20	801550 (74LS273)	U37
801813 (74LS112)	U10,16,24,25,30,43	801999 (74LS390)	U44
801528 (74LS00)	U11,26,42	801585 (74LS138)	U48
801530 (74LS08)	U12,15,29,40,57		

10. RESISTOR NETWORKS ARE:
801006-752 (7.5K) U9,54
801006-391 (390) U46,47

(11) COMPONENTS NOT INSTALLED:
J12: TCVFU OPTION, SEE INSTALLATION DRAWING 249431.
MEM2: CODE CONVERSION OPTION, SEE INSTALLATION DRAWING

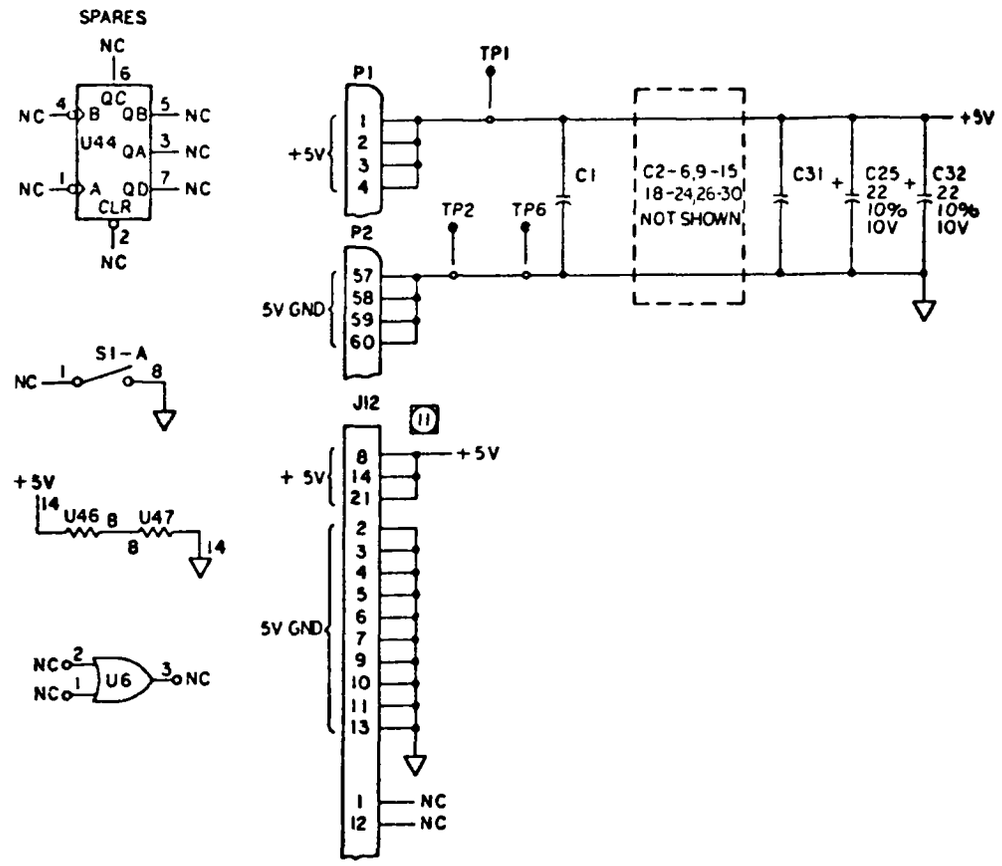

TITLE: SCHEMATIC DIAGRAM— CENTRONICS I/F

SIZE	CODE IDENT NO	DRAWING NO	REV
D	19790	249764	B

SCALE NONE SHEET 1 OF 9

FIGURE 1 (SH 1 OF 9)
CIRCUIT CARD ASSEMBLY,
DPC CENTRONICS-COMPATIBLE
INTERFACE

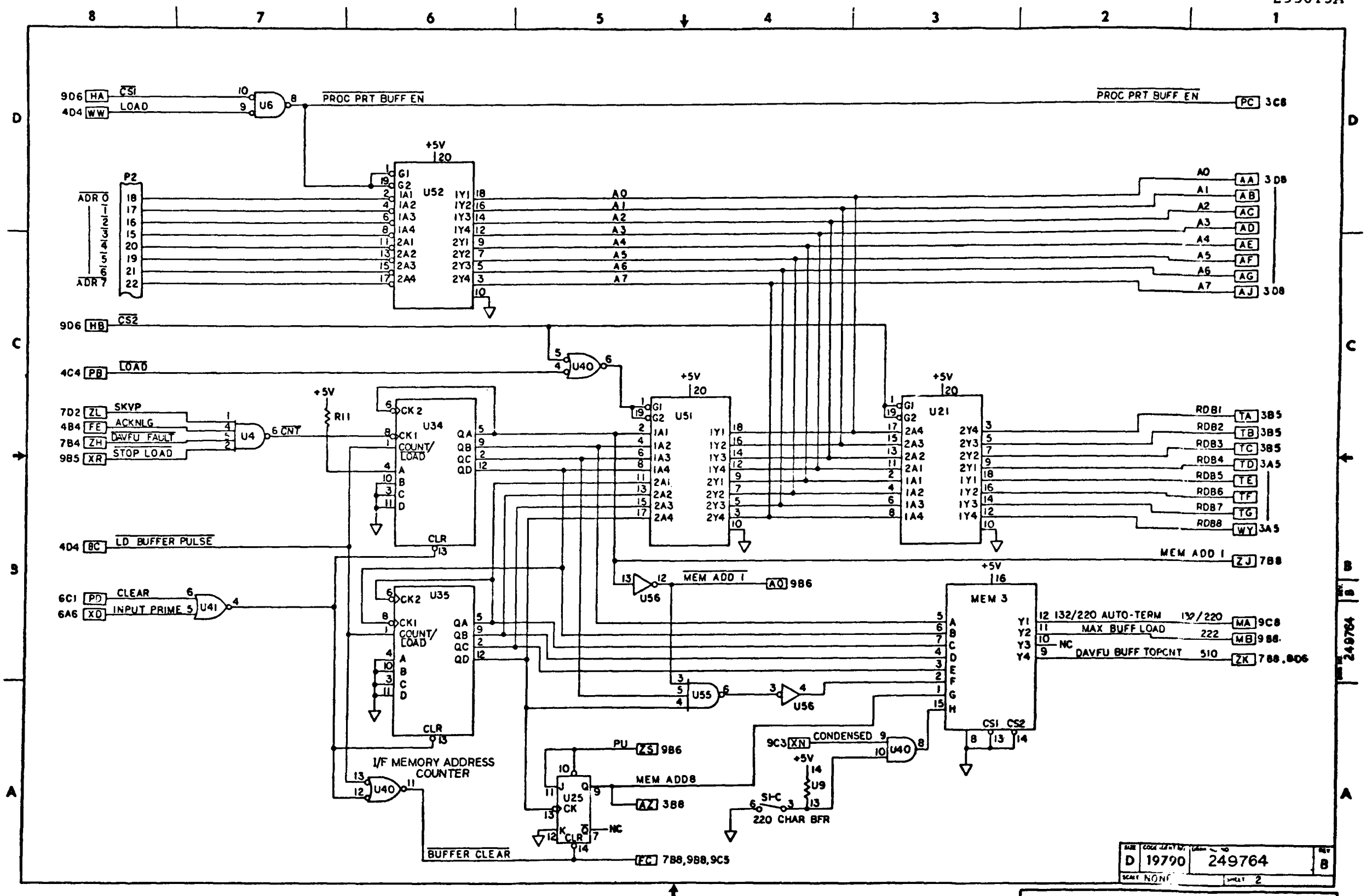

FIGURE 1 (SH 2 OF 9)
CIRCUIT CARD ASSEMBLY,
DPC CENTRONICS-COMPATIBLE
INTERFACE

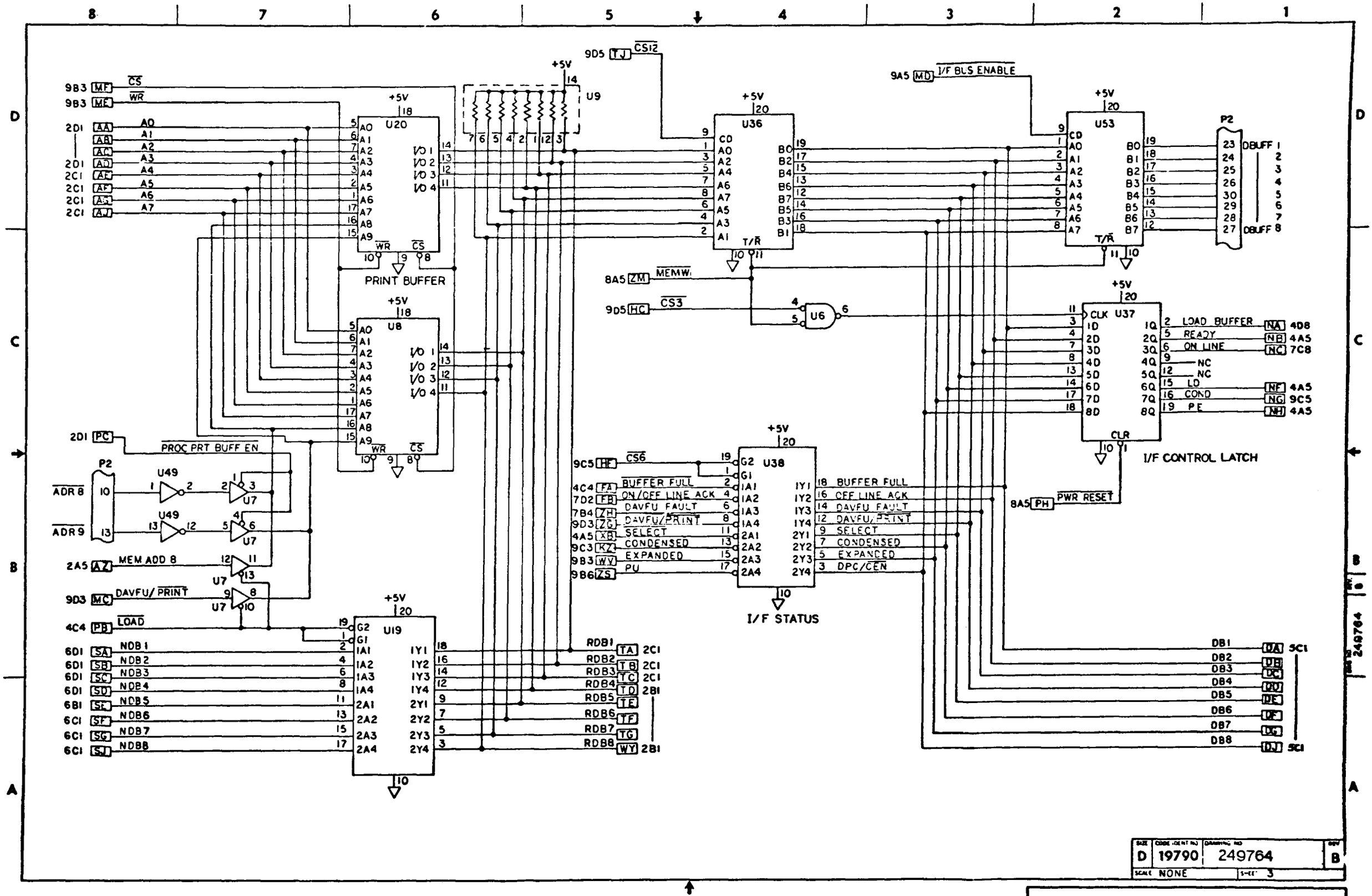

FIGURE 1 (SH 3 OF 9)
CIRCUIT CARD ASSEMBLY,
DPC CENTRONICS-COMPATIBLE
INTERFACE

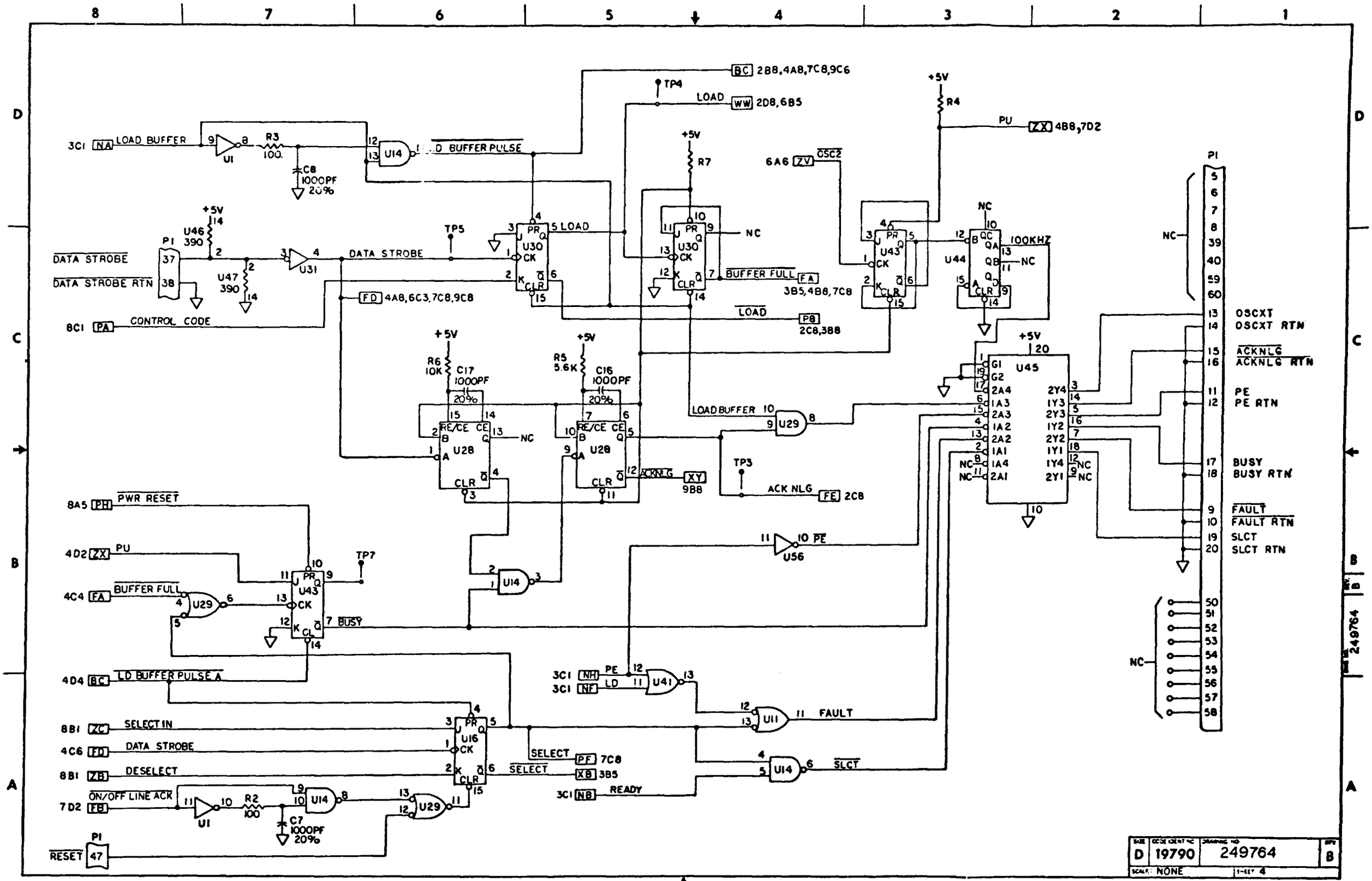

FIGURE 1 (SH 4 OF 9)
CIRCUIT CARD ASSEMBLY,
DPC CENTRONICS-COMPATIBLE
INTERFACE

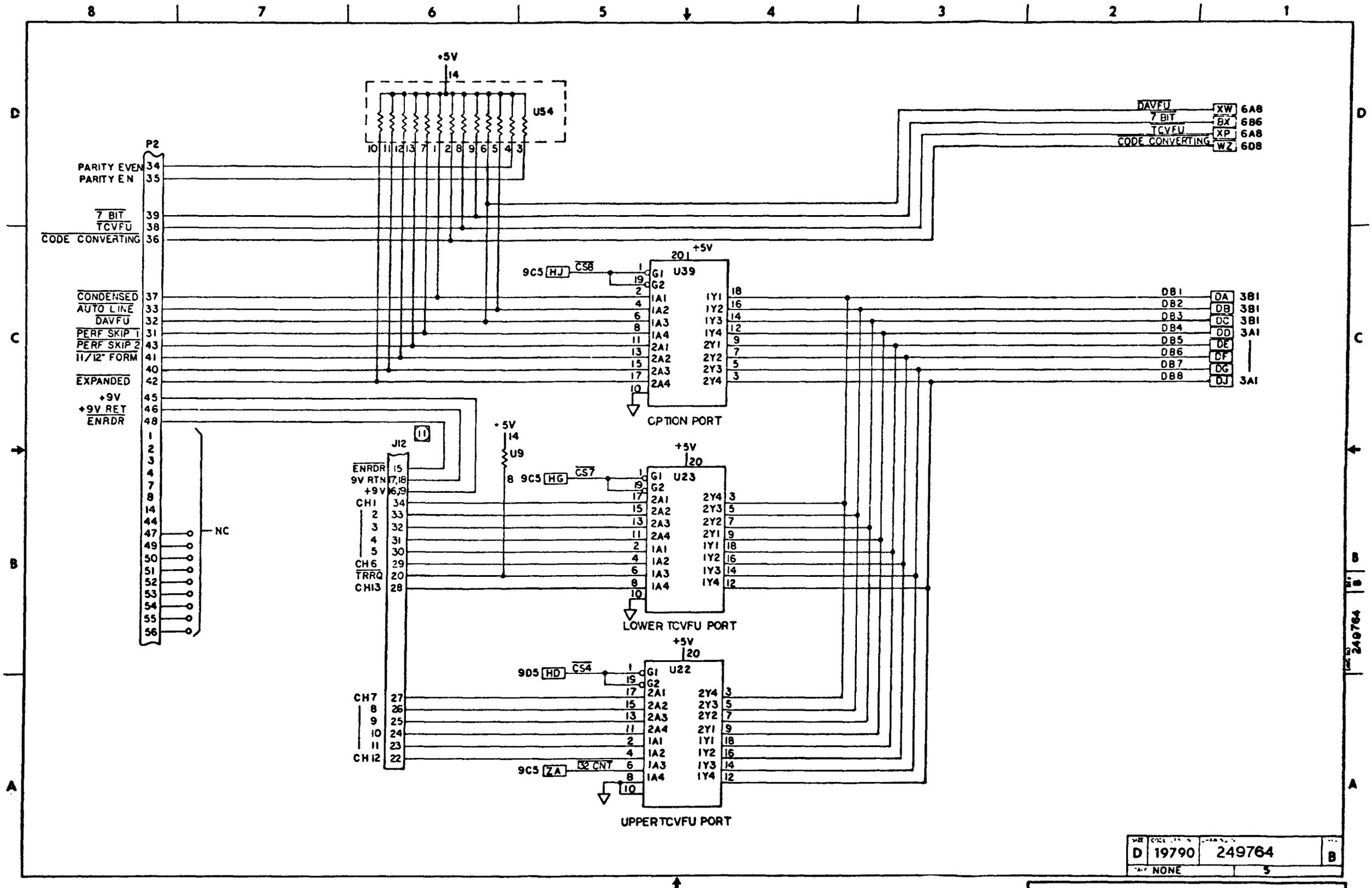

FIGURE 1 (SH 5 OF 9)
CIRCUIT CARD ASSEMBLY,
DPC CENTRONICS-COMPATIBLE
INTERFACE

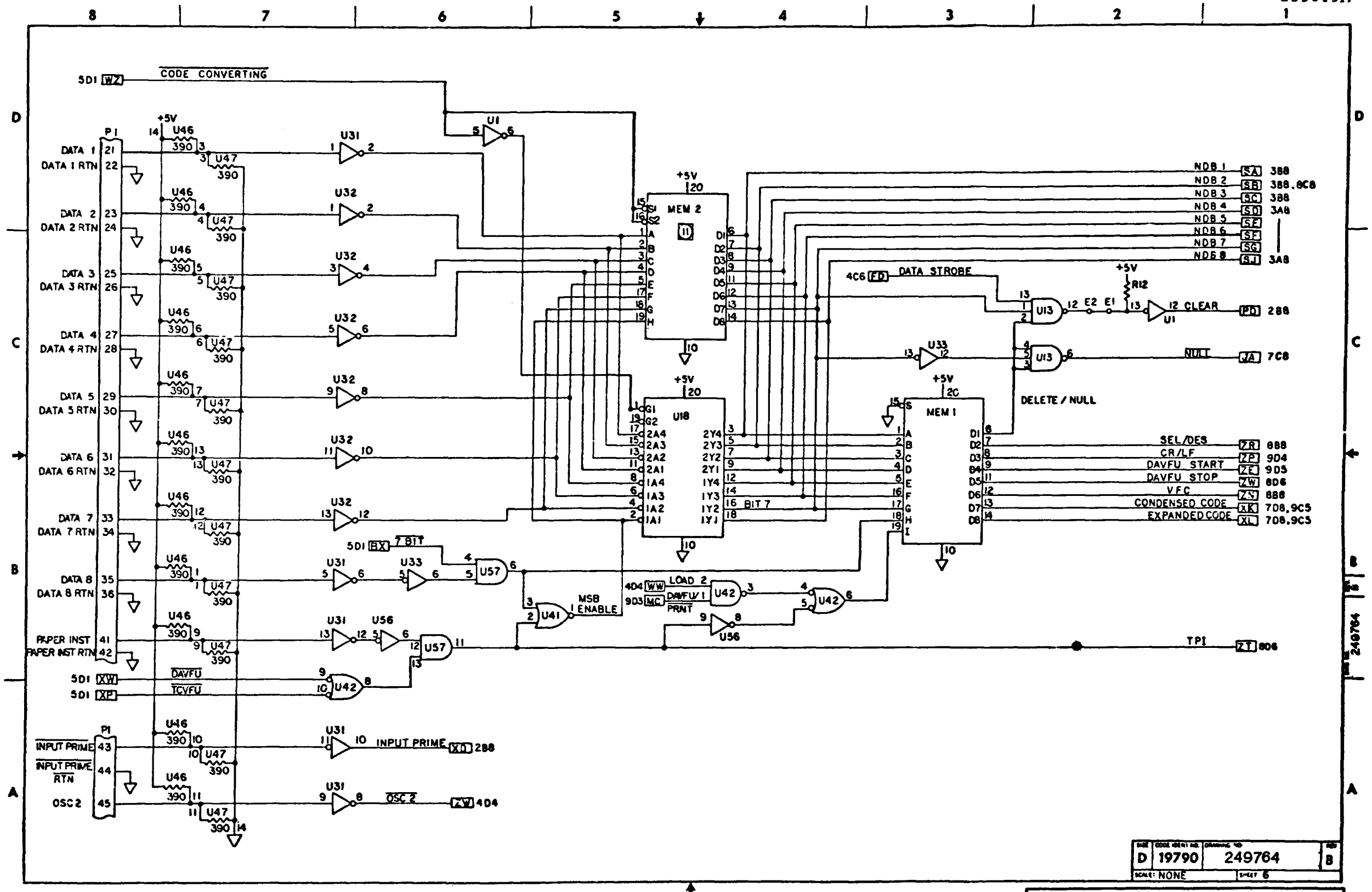

FIGURE 1 (SH 6 OF 9)
CIRCUIT CARD ASSEMBLY,
DPC CENTRONICS-COMPATIBLE
INTERFACE

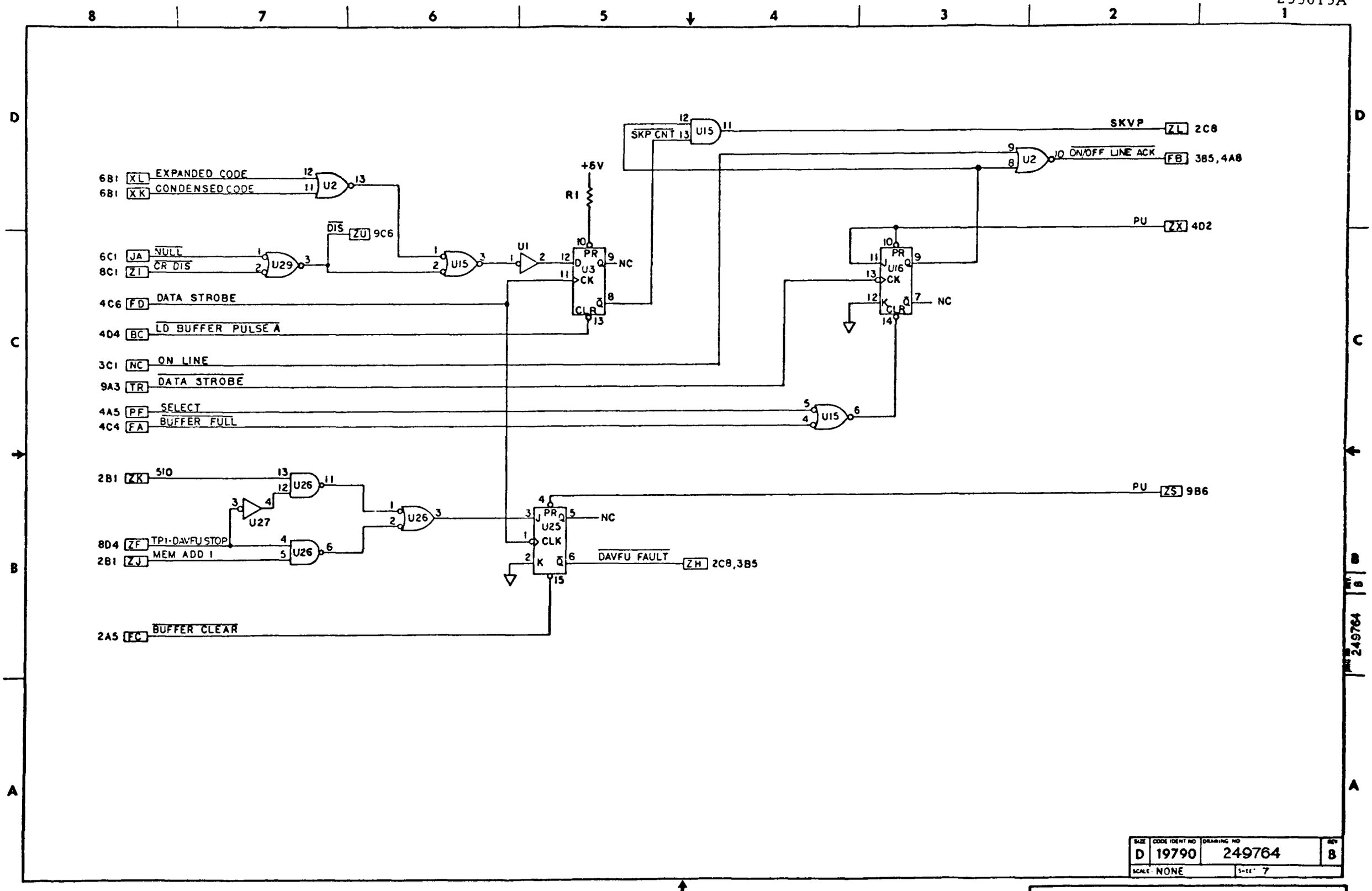

FIGURE 1 (SH 7 OF 9)
CIRCUIT CARD ASSEMBLY,
DPC CENTRONICS-COMPATIBLE
INTERFACE

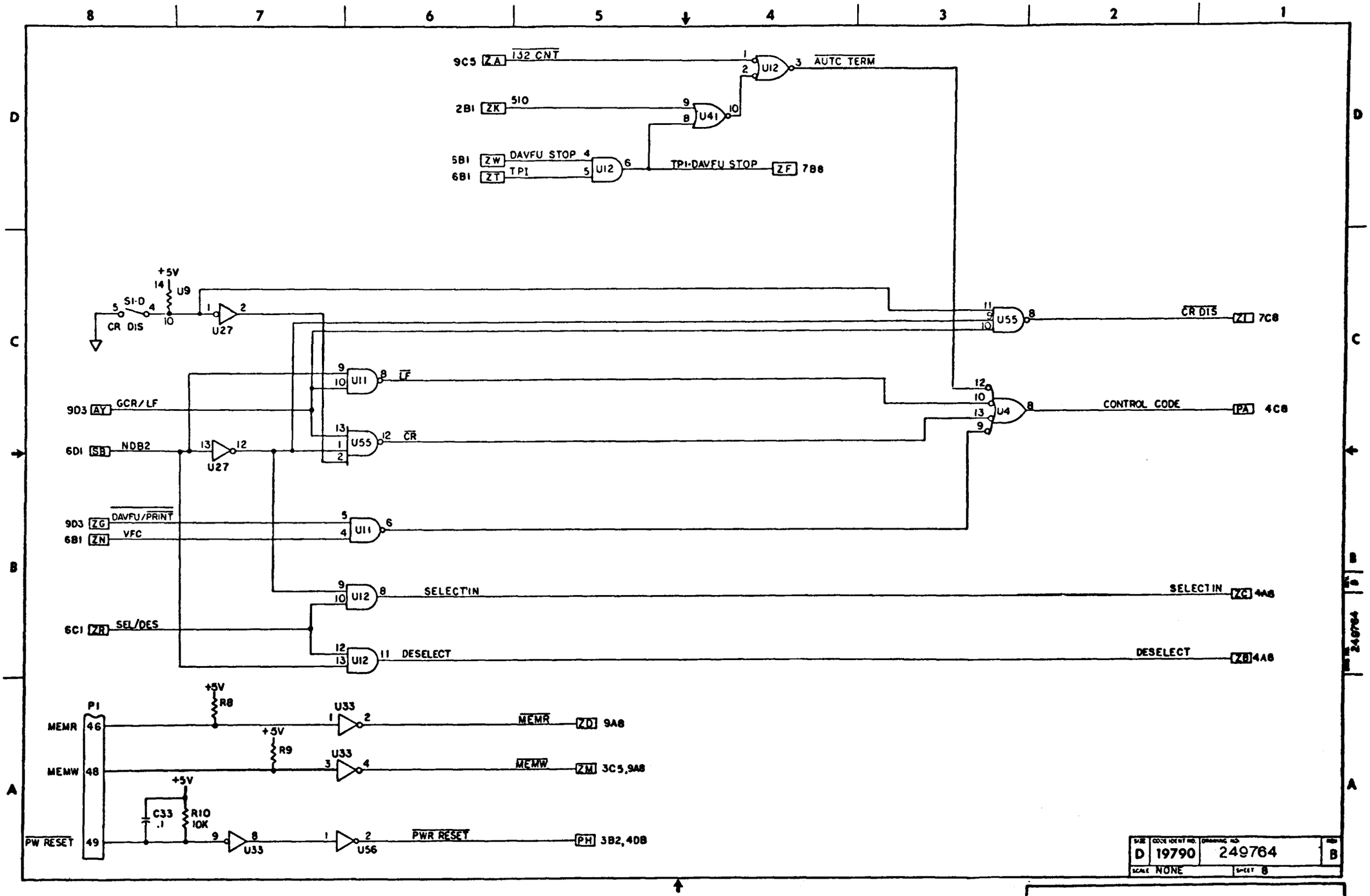

FIGURE 1 (SH 8 OF 9)
CIRCUIT CARD ASSEMBLY,
DPC CENTRONICS-COMPATIBLE
INTERFACE

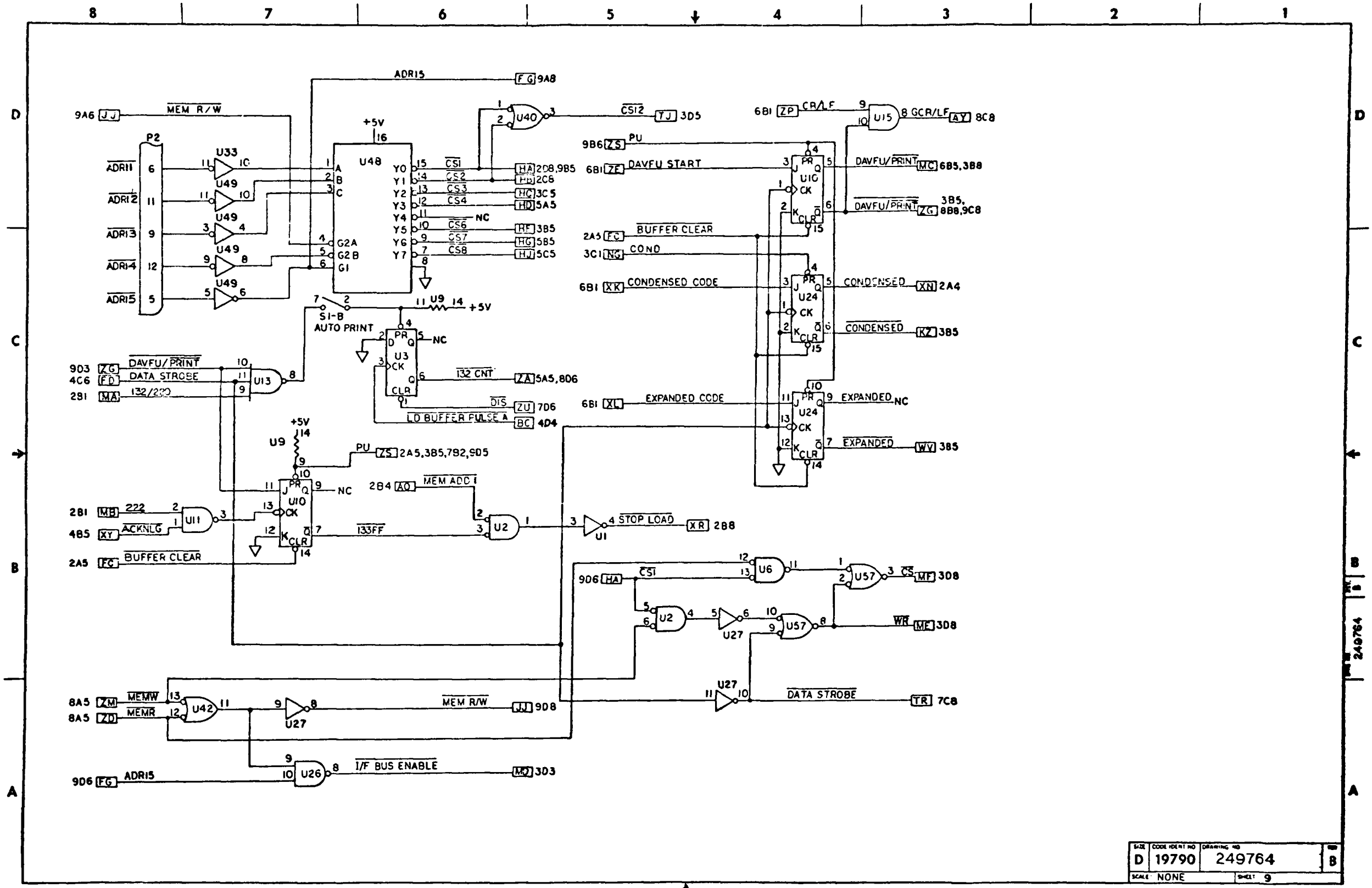

SIZE	CODE IDENT NO	DRAWING NO	REV
D	19790	249764	B
SCALE NONE		SHEET 9	

FIGURE 1 (SH 9 OF 9)
CIRCUIT CARD ASSEMBLY,
DPC CENTRONICS-COMPATIBLE
INTERFACE

NOTES: (UNLESS OTHERWISE SPECIFIED)

1. ALL RESISTANCE VALUES ARE IN OHMS, 5%, 1/4W.
2. ALL RESISTORS ARE 7.5 K.
3. ALL CAPACITANCE VALUES ARE IN UF, +80%, -20%, 50V.
4. ALL CAPACITORS ARE 0.1 UF.
5. —o— DENOTES JUMPER WIRE PAD.
6. INTERRUPTED SIGNAL CONNECTIONS ARE CODED BY SHEET AND ZONE (E.G. 7C2 IS SHEET 7 ZONE C2).
7. INTEGRATED CIRCUITS ARE:

P/N	+5V	0V	TYPE	REF DESIGNATION
	24	12	(2708)	MEM 1,2
801804	20	-	(8080)	U1
801180	24	12	(74154)	U2
801614	18	9	(2114)	U5,10,11,17
801716	20	10	(74LS244)	U7,8,21,26,27,31,42
801691	20	10	(74LS240)	U9
801528	14	7	(74LS00)	U12
801584	14	7	(74LS02)	U13,16
801713	18	8	(8111A-4)	U14,15
801536	14	7	(74LS32)	U19,41
801550	20	10	(74LS273)	U20
801961	20	10	(74LS373)	U22,23
801805	20	10	(8304)	U24,25
801802	28	14	(8228)	U28
810021	26	4	(9551)	U29
801799	16	8	(74LS221)	U30
801530	14	7	(74LS08)	U32,55
810000	4	-	(5307)	U33
800651	14	7	(7406)	U35
801585	16	8	(74LS138)	U36
801812	14	7	(74LS125)	U37
801548	16	8	(74LS253)	U38
810009	8	5	(6N137)	U39
810053	-	-	(TIL 116)	U43
801803	16	8	(8224)	U44
801813	16	8	(74LS112)	U45
801999	16	8	(74LS390)	U46
801533	14	7	(74LS14)	U47,50,51
801529	14	7	(74LS04)	U48
801889	14	7	(1488)	U49
801534	14	7	(74LS20)	U52
801888	14	7	(1489)	U53,54

8. RESISTOR NETWORKS ARE:
   801006- 752 (7.5K) U34, 40,56

9. COMPONENTS NOT INSTALLED:
   CR 3; U 6, 18
   J12: TCVFU OPTION, SEE INSTALLATION DRAWING 249431.
   MEM 1,2: CODE CONVERSION OPTION, SEE INSTALLATION DRAWING.

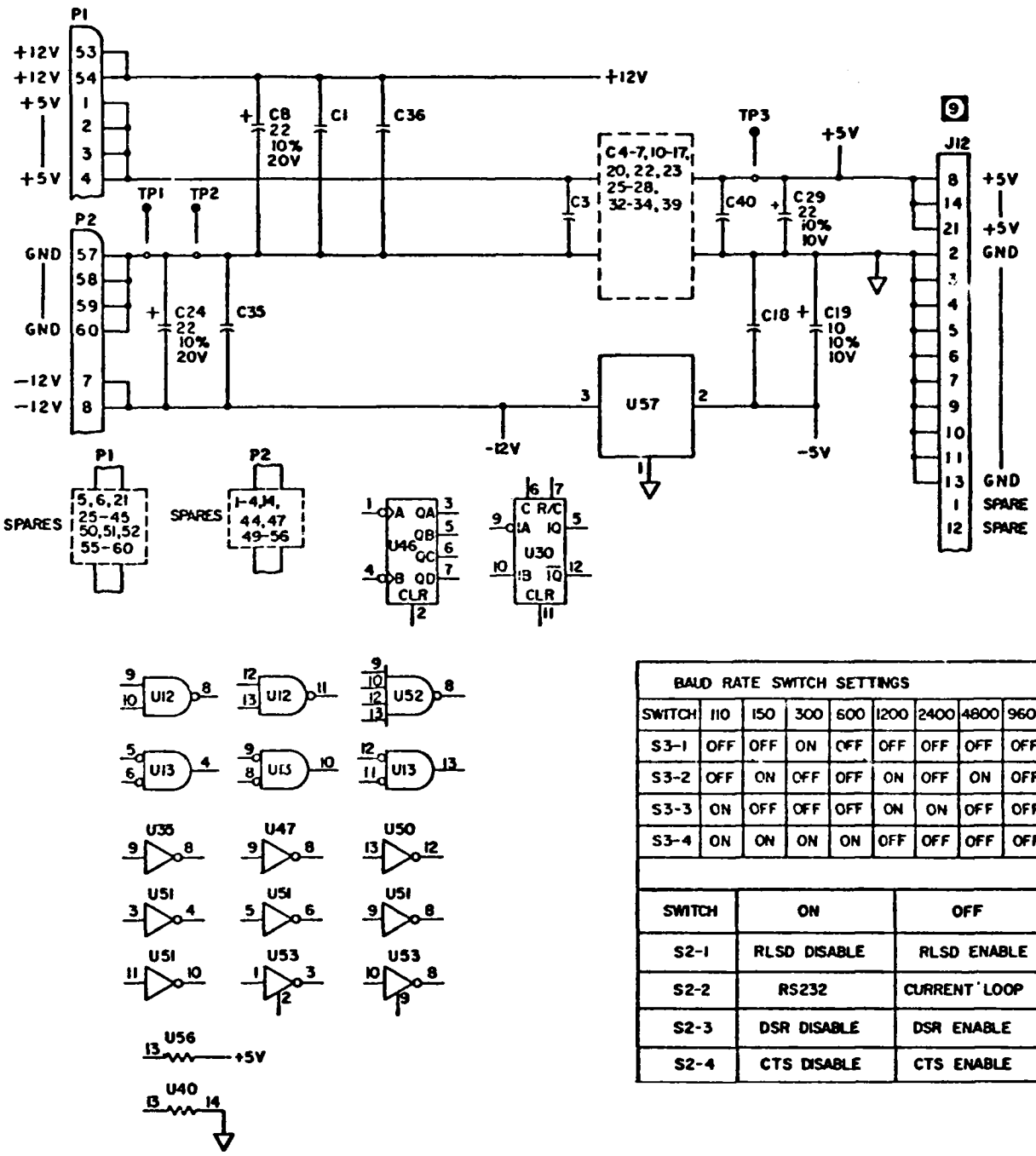

BAUD RATE SWITCH SETTINGS								
SWITCH	110	150	300	600	1200	2400	4800	9600
S3-1	OFF	OFF	ON	OFF	OFF	OFF	OFF	OFF
S3-2	OFF	ON	OFF	OFF	ON	OFF	ON	OFF
S3-3	ON	OFF	OFF	OFF	ON	ON	OFF	OFF
S3-4	ON	ON	ON	ON	OFF	OFF	OFF	OFF

SWITCH	ON	OFF
S2-1	RLSD DISABLE	RLSD ENABLE
S2-2	RS232	CURRENT LOOP
S2-3	DSR DISABLE	DSR ENABLE
S2-4	CTS DISABLE	CTS ENABLE

SWITCH POSITION DEFINITION		
ON	CLOSED CONTACT	POSITION B
OFF	OPEN CONTACT	POSITION A

SWITCH	ON	OFF
S1-1	ONE STOP BIT	TWO STOP BITS
S1-2	STATUS DISABLE	STATUS ENABLE

SWITCH POSITIONS		OUTPUT FUNCTIONS			
S1-4	S1-3	TxD P1-23,24	ATxD P1-9,10	TxD P1-19	BUSY P1-20
ON	ON	TxD	TxD	TxD	BUSY LOW TRUE
ON	OFF	TxD	TxD	TxD	BUSY HIGH TRUE
OFF	ON	BUSY LOW TRUE			
OFF	OFF	BUSY HIGH TRUE			

Dataproducts

TITLE SCHEMATIC DIAGRAM - SERIAL I/F

SIZE	CODE IDENT NO.	DRAWING NO.	REV
D	19790	249769	B

SCALE NONE SHEET 1 OF 8

FIGURE 2 (SH 1 OF 8)
CIRCUIT CARD ASSEMBLY,
SERIAL INTERFACE

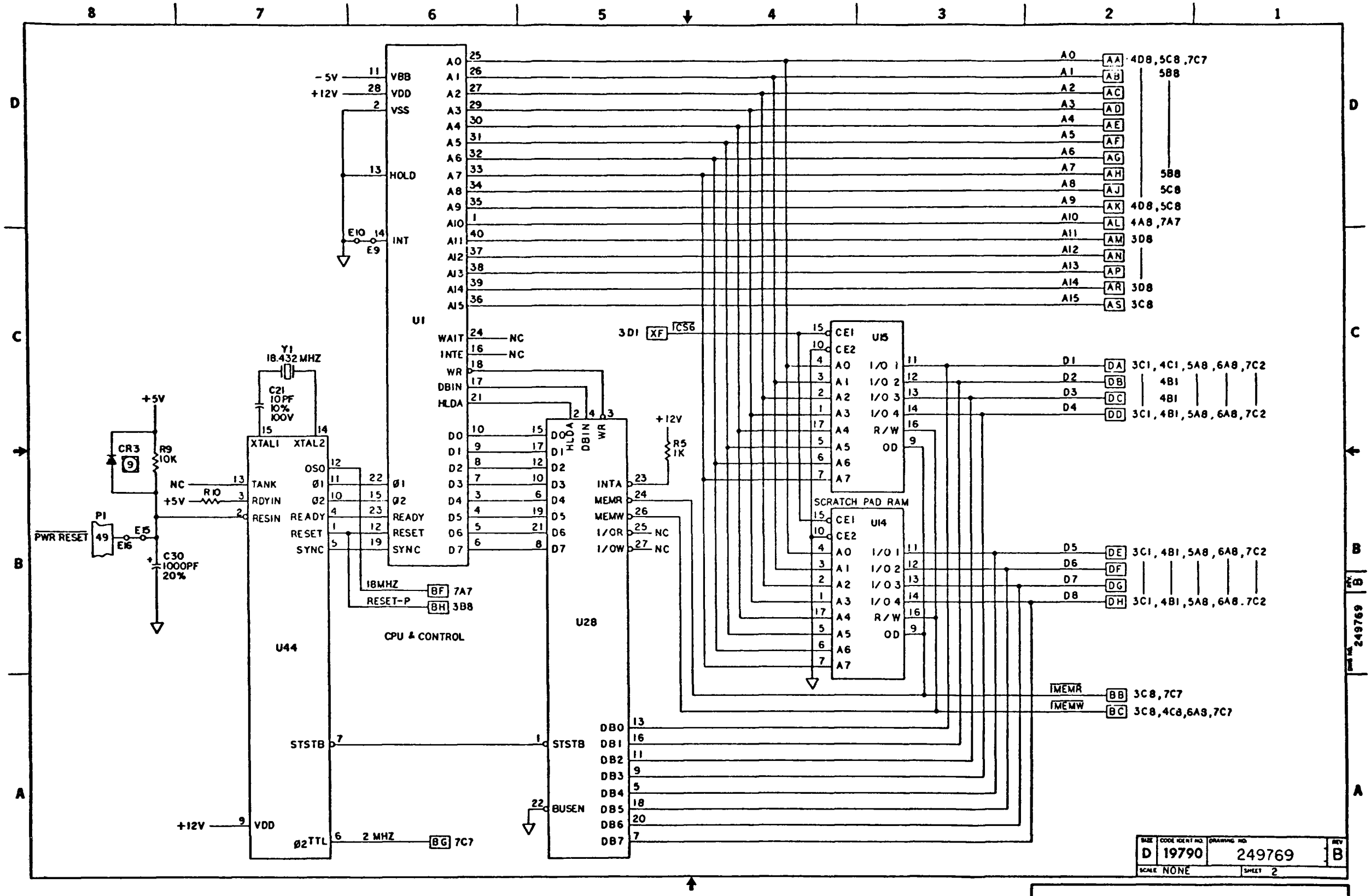

FIGURE 2 (SH 2 OF 8)
CIRCUIT CARD ASSEMBLY,
SERIAL INTERFACE

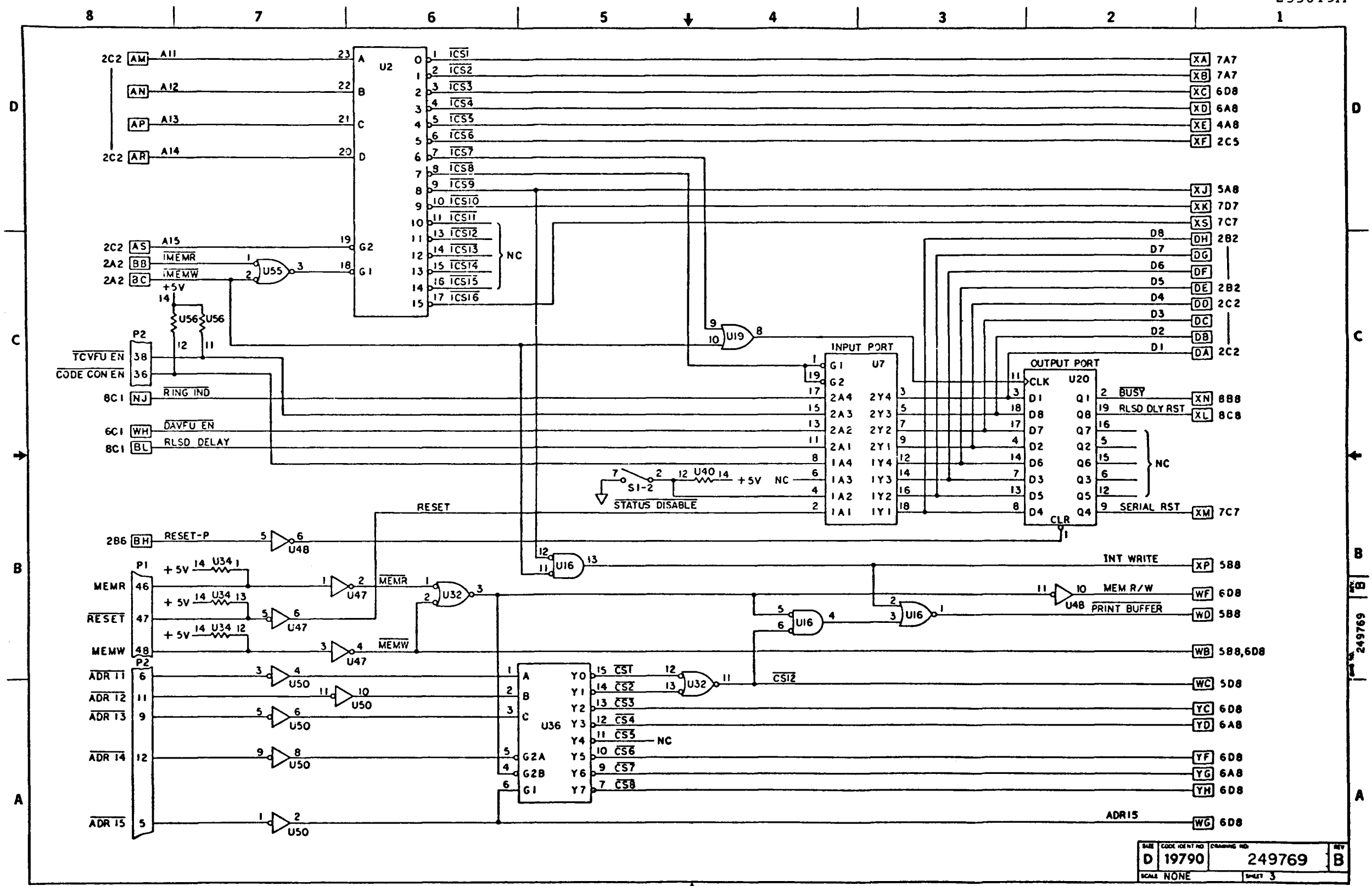

FIGURE 2 (SH 3 OF 8)
CIRCUIT CARD ASSEMBY,
SERIAL INTERFACE

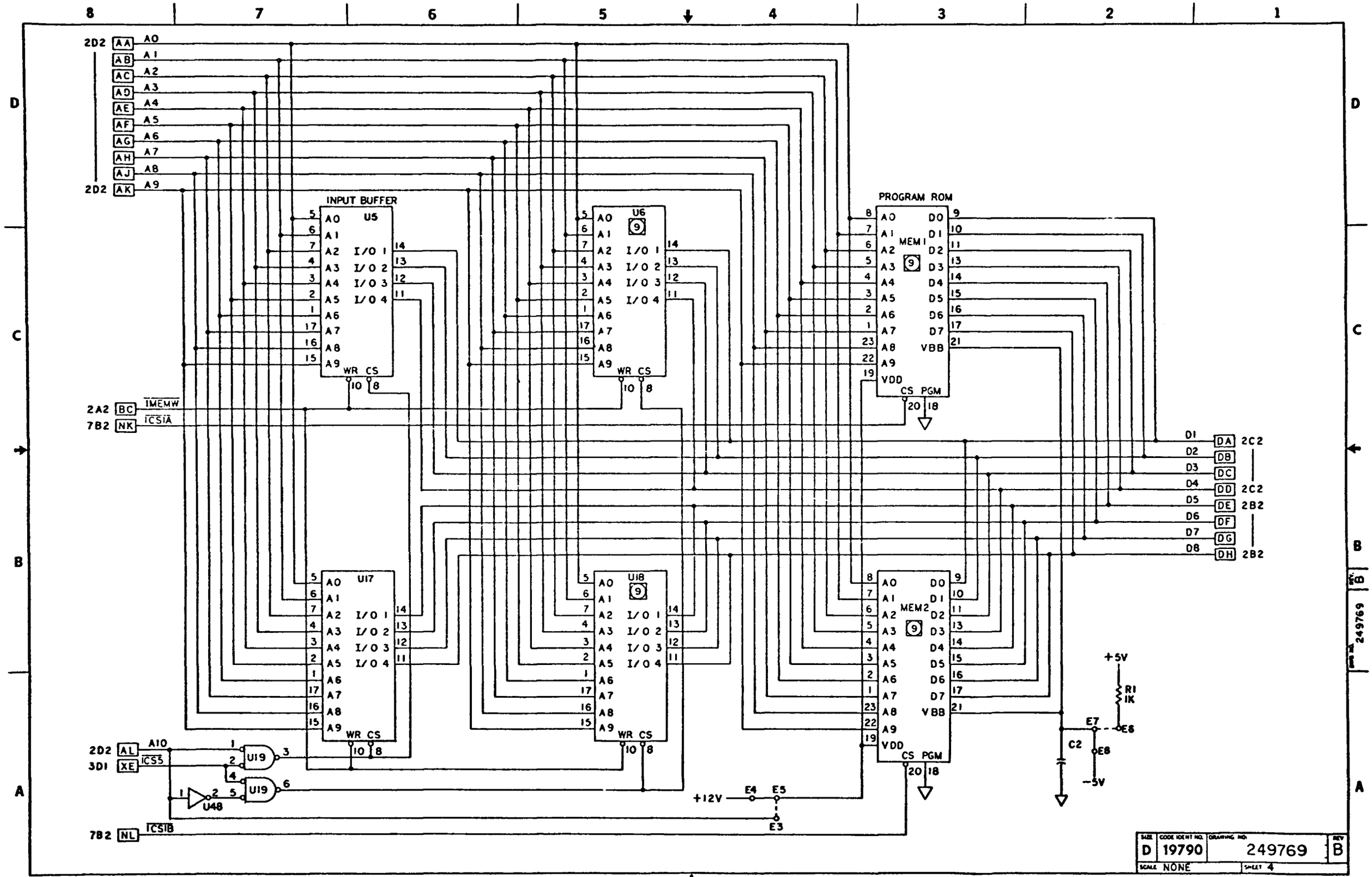

FIGURE 2 (SH 4 OF 8)
CIRCUIT CARD ASSEMBLY,
SERIAL INTERFACE

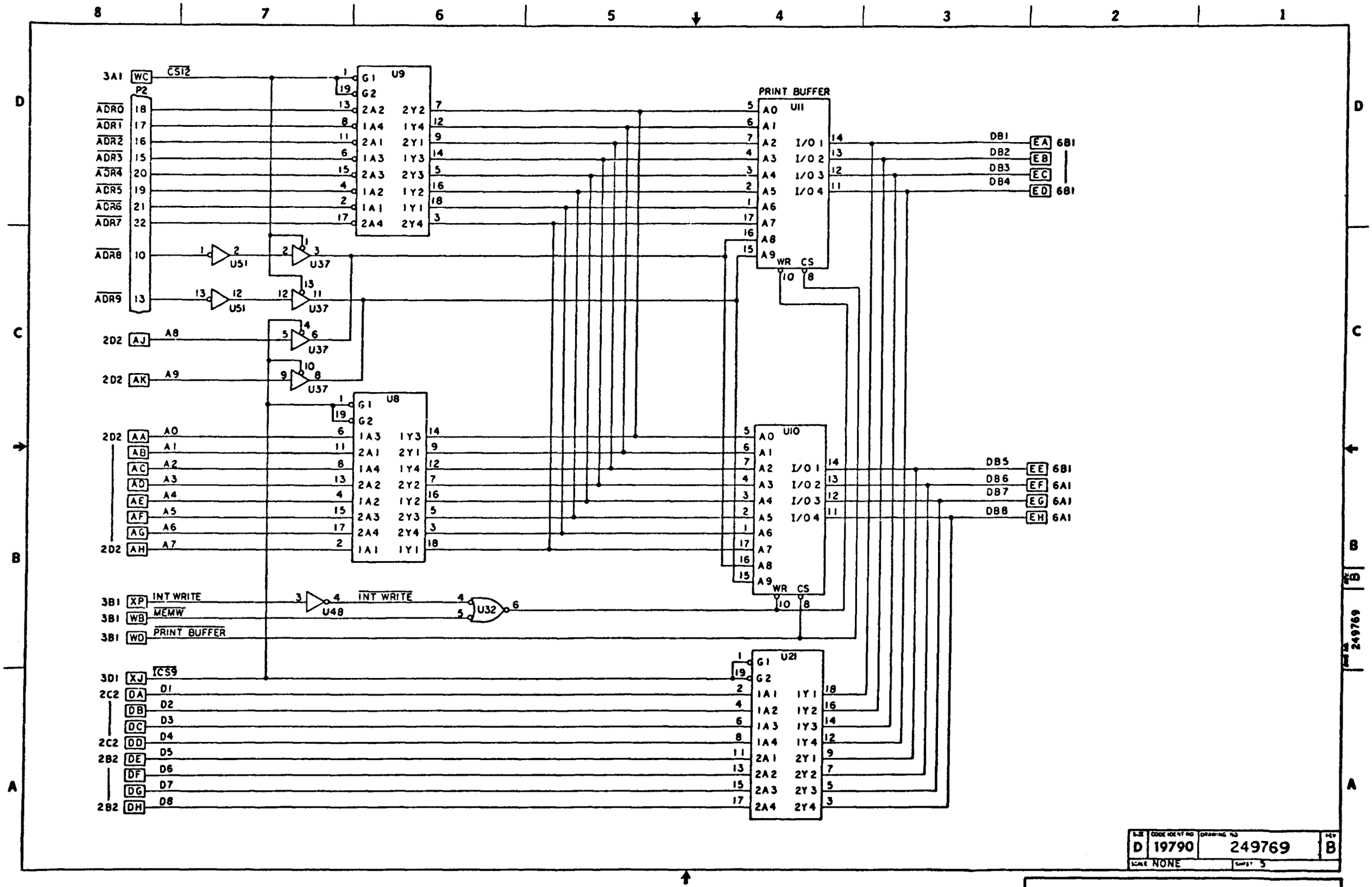

FIGURE 2 (SH 5 OF 8)
CIRCUIT CARD ASSEMBLY,
SERIAL INTERFACE

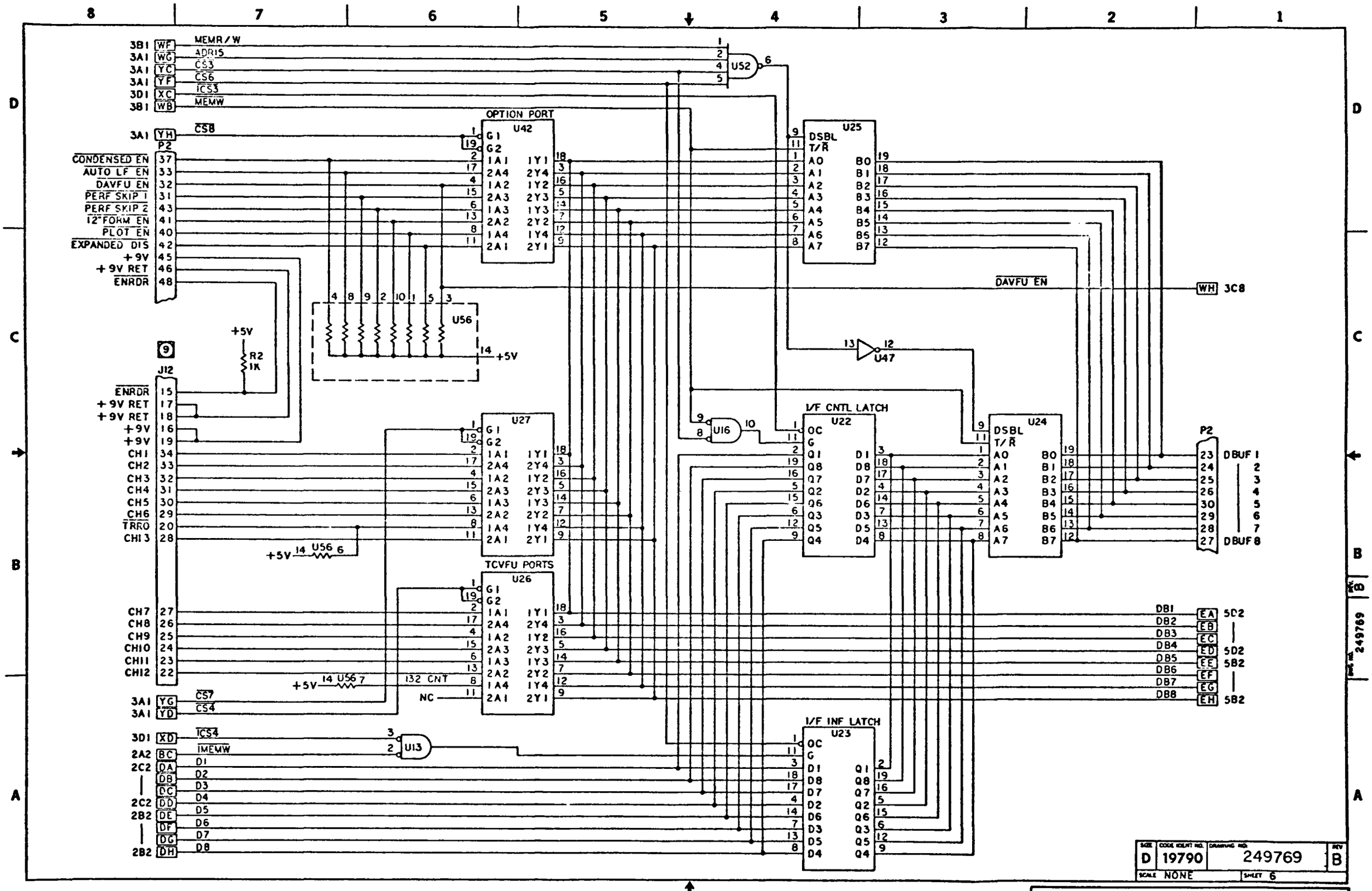

FIGURE 2 (SH 6 OF 8)
CIRCUIT CARD ASSEMBLY,
SERIAL INTERFACE

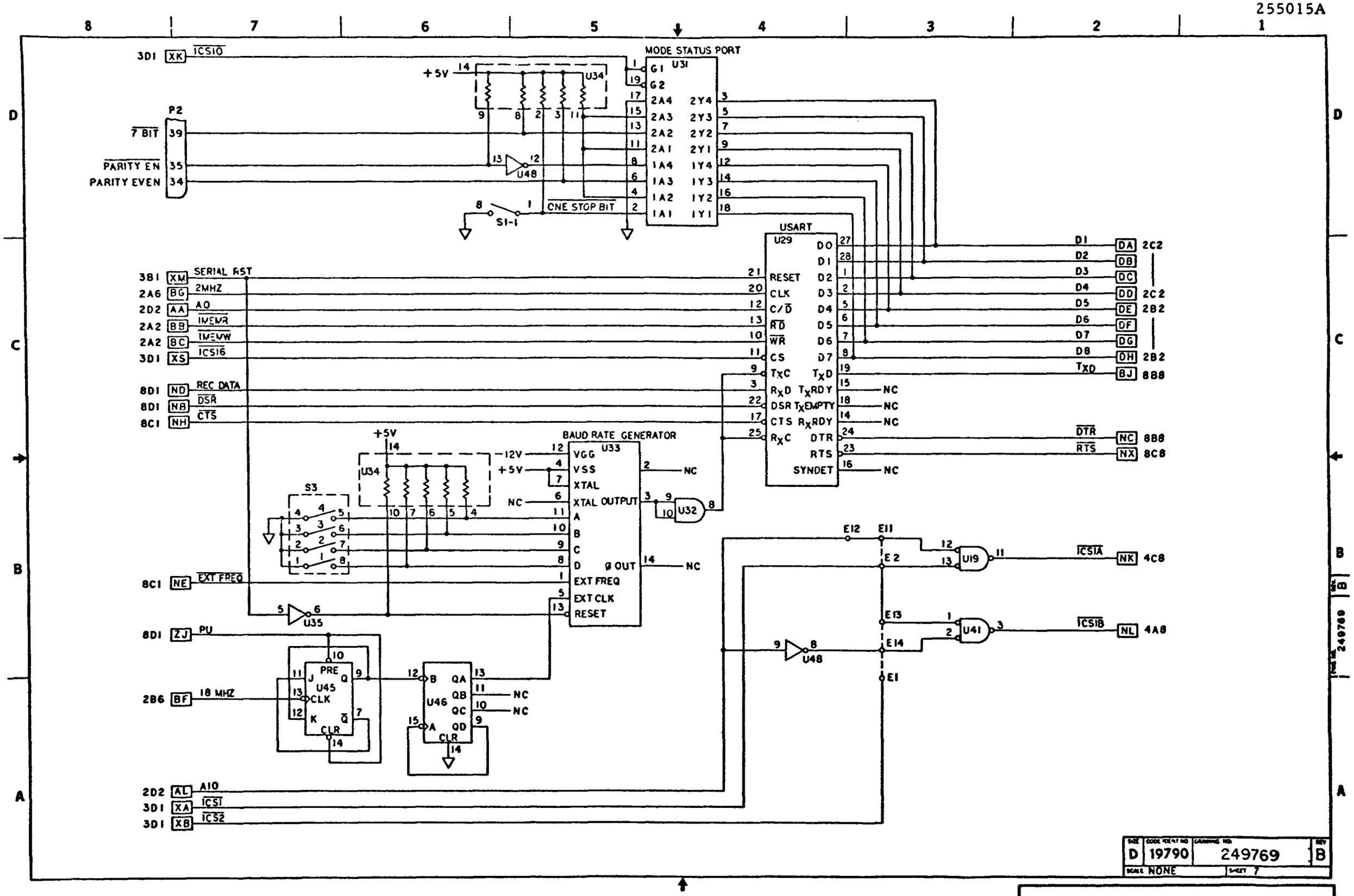

FIGURE 2 (SH 7 OF 8)
CIRCUIT CARD ASSEMBLY,
SERIAL INTERFACE

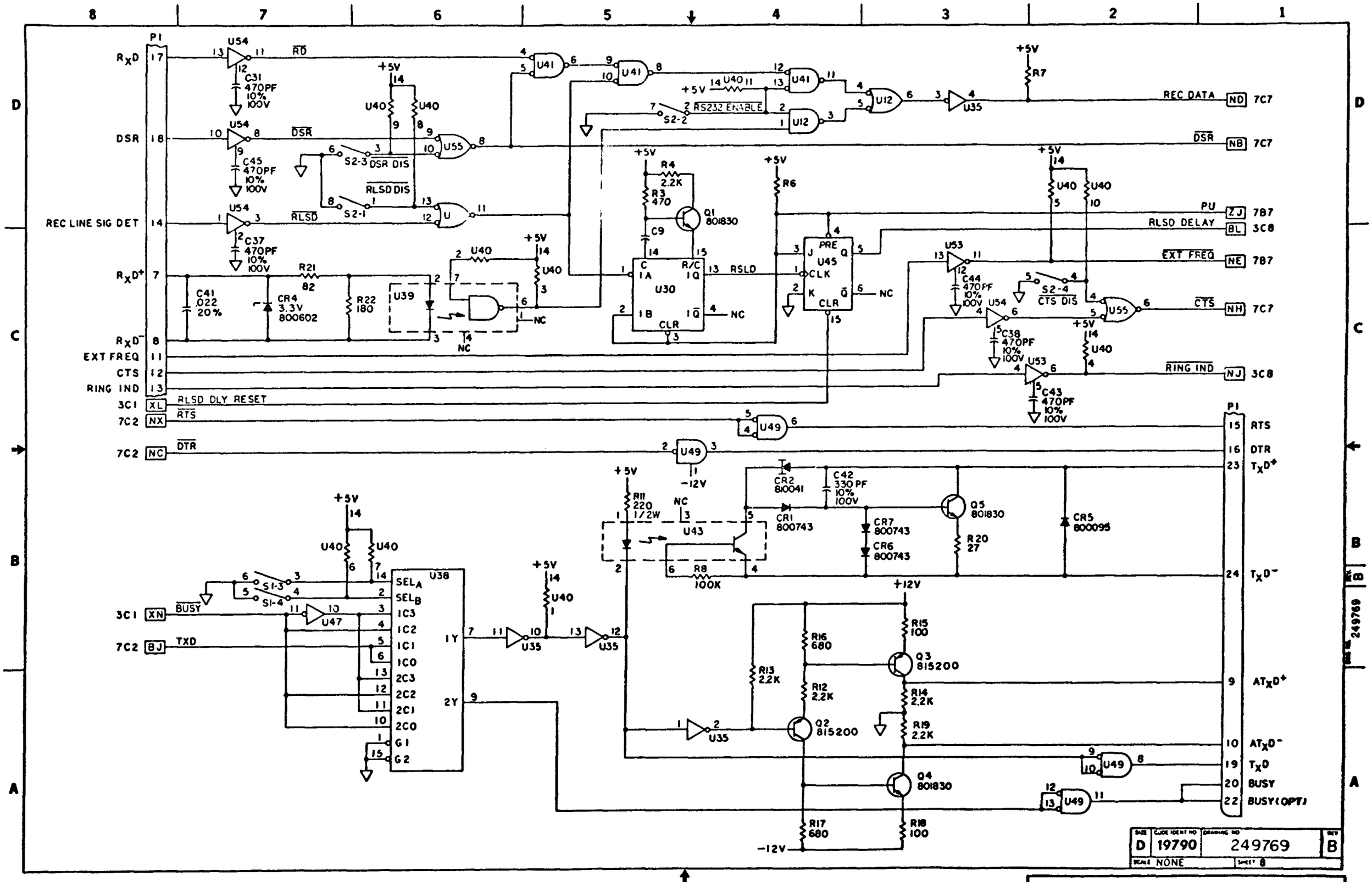

FIGURE 2 (SH 8 OF 8)
CIRCUIT CARD ASSEMBLY,
SERIAL INTERFACE

NOTES: (UNLESS OTHERWISE SPECIFIED)

1. ALL RESISTANCE VALUES ARE IN OHMS, 5%, 1/4W.
2. ALL CAPACITANCE VALUES ARE IN UF, +80%, -20%, 50V.
3. —o— DENOTES JUMPER WIRE PAD.
4. INTERRUPTED SIGNAL CONNECTIONS ARE CODED BY SHEET AND ZONE (E.G. 7C1 IS SHEET 7 ZONE C1).
5. INTEGRATED CIRCUITS ARE:

	+5V	0V		
810220	20	10	(74S472)	MEM2
801913	16	8	(74S287)	MEM3
801534	14	7	(74LS20)	U1
801540	14	7	(74LS74)	U2,6,10,26
801536	14	7	(74LS32)	U3,12,18
801530	14	7	(74LS08)	U4,13,32
801813	16	8	(74LS112)	U5,7,9 15,27,35
801528	14	7	(74LS00)	U6,11,21,53
801529	14	7	(74LS04)	U14,17,52
801584	14	7	(74LS02)	U16
801541	5	12	(74LS75)	U19
801759	14	7	(74LS86)	U20,25
801585	16	8	(74LS138)	U22
801812	14	7	(74LS125)	U23
801532	14	7	(74LS11)	U24
801533	14	7	(74LS14)	U29
800959	14	7	(7414)	U30,31,36
801550	20	10	(74LS273)	U33
801716	20	10	(74LS244)	U34,41,45,48,50,51,55
801614	18	9	(2114)	U39,47
801691	20	10	(74LS240)	U40,42,56
801961	20	10	(74LS373)	U43
801814	14	7	(74LS280)	U44
801811	16	8	(74LS366)	U46
801805	20	10	(8304)	U49,57
801694	14	7	(74LS393)	U54

6. RESISTOR NETWORKS ARE:
   801006-391(390): U28,37
   801006-752(7.5K): U38,58

7 COMPONENTS NOT INSTALLED:
C37; R8
J12: TCVFU OPTION, SEE INSTALLATION DWG. 249431.
MEM1: CODE CONVERSION OPTION, SEE INSTALLATION DWG.

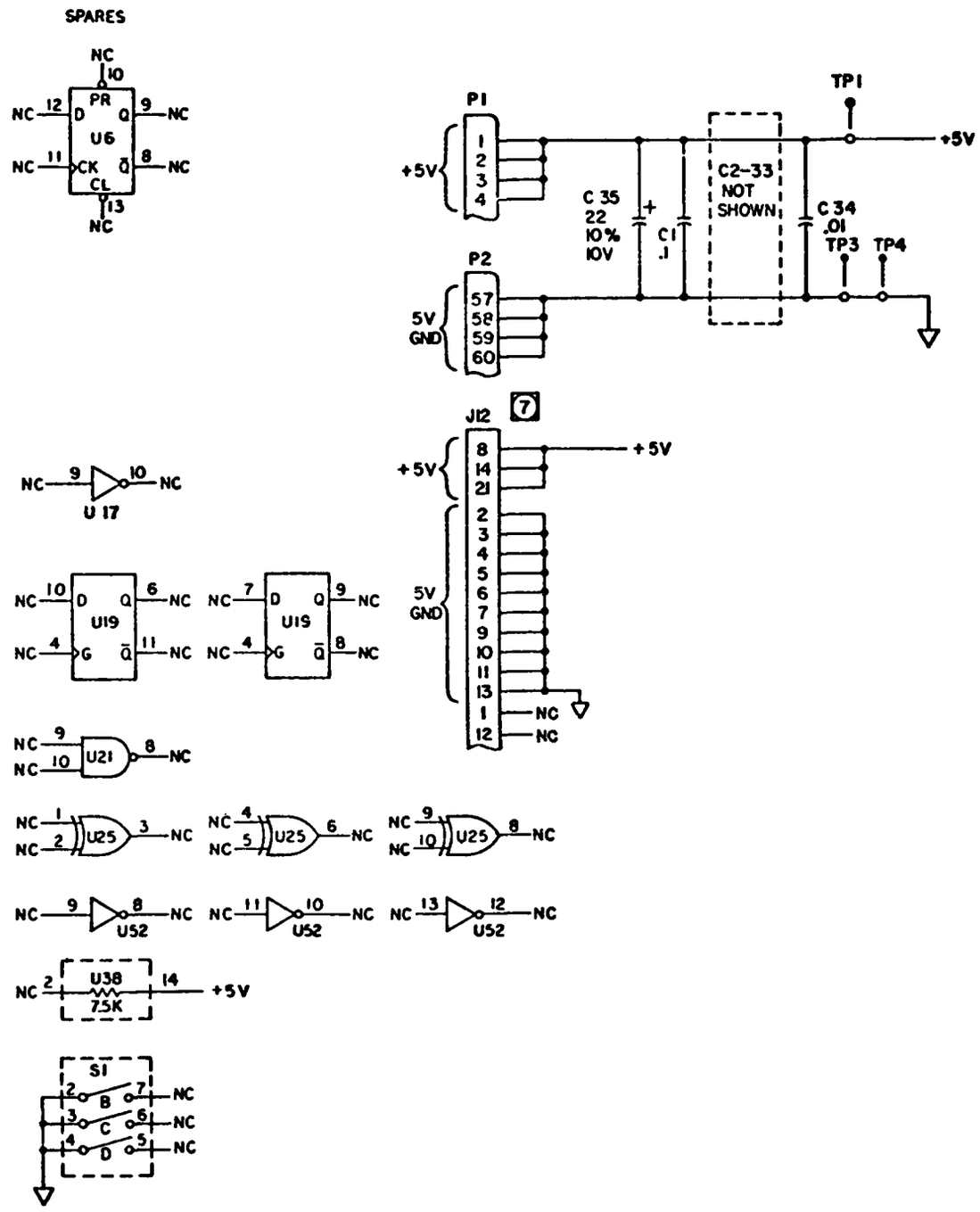

Dataproducts

TITLE: SCHEMATIC, SHORT LINE I/F

SIZE	CODE IDENT NO.	DRAWING NO.	REV
D	19790	249814	A

SCALE NONE SHEET 1 OF 9

FIGURE 3 (SH 1 OF 9)
CIRCUIT CARD ASSEMBLY,
SHORT-LINE PARALLEL
INTERFACE

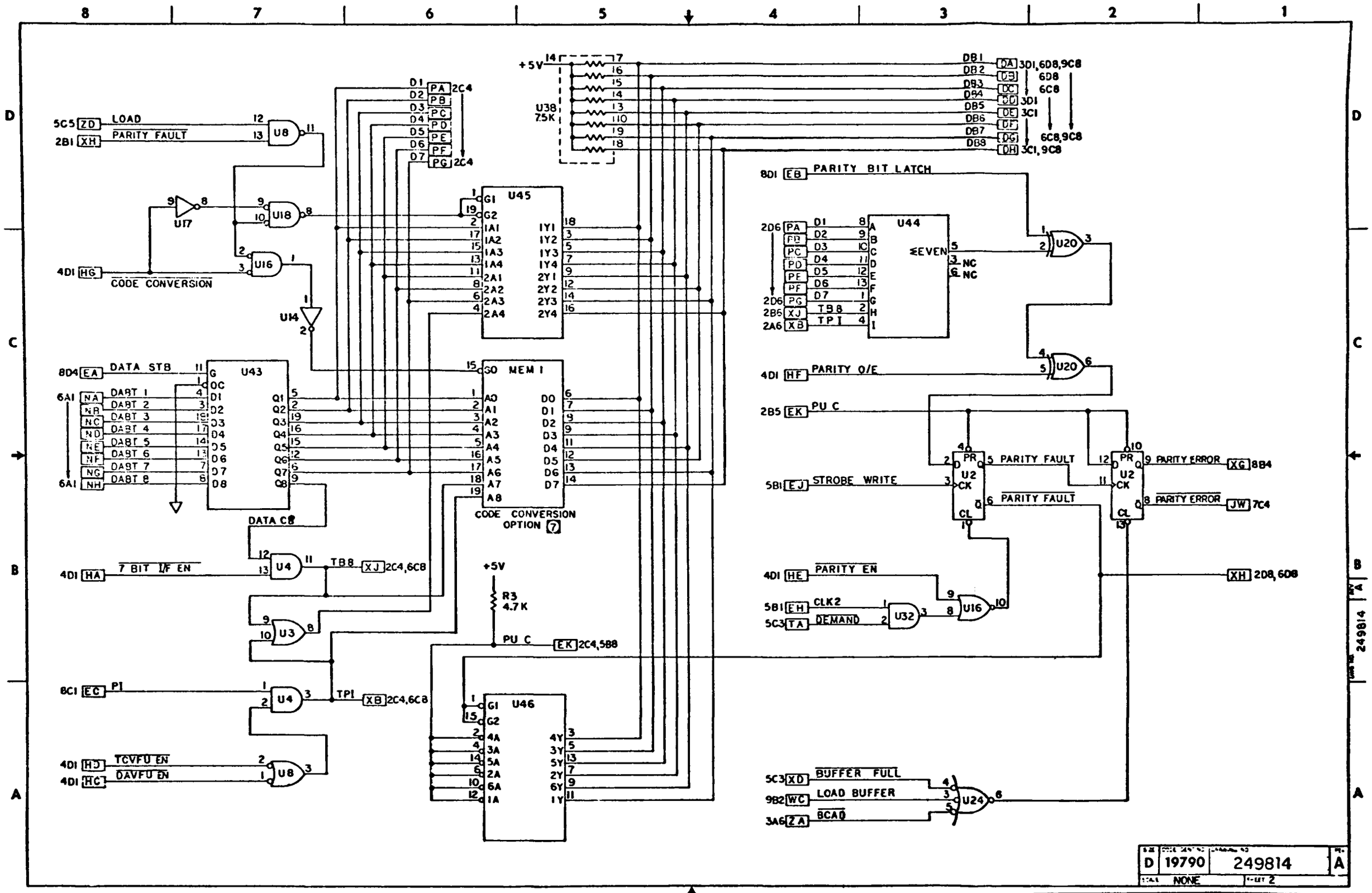

FIGURE 3 (SH 2 OF 9)
CIRCUIT CARD ASSEMBLY,
SHORT-LINE PARALLEL
INTERFACE

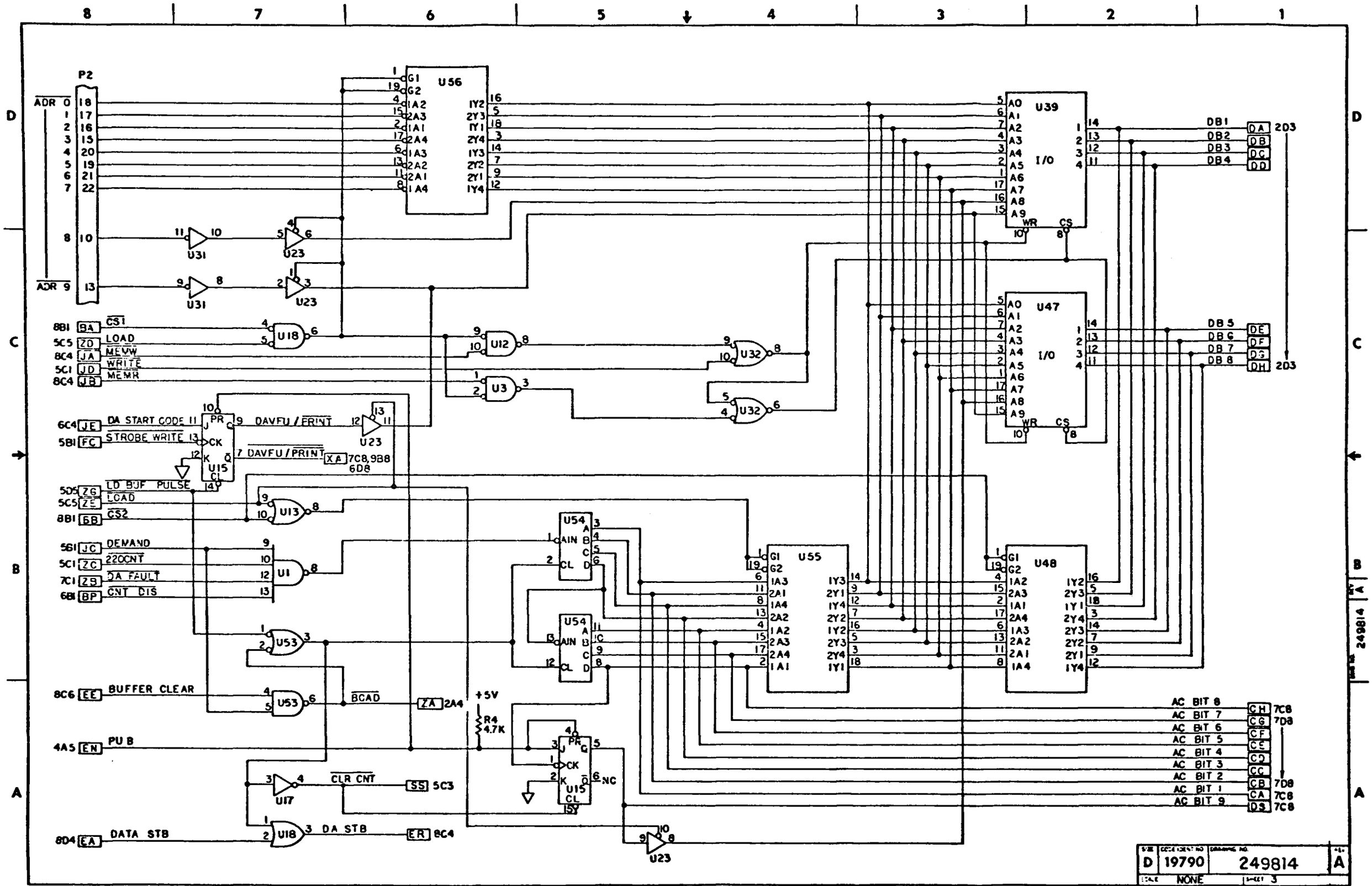

FIGURE 3 (SH 3 OF 9)
CIRCUIT CARD ASSEMBLY,
SHORT-LINE PARALLEL
INTERFACE

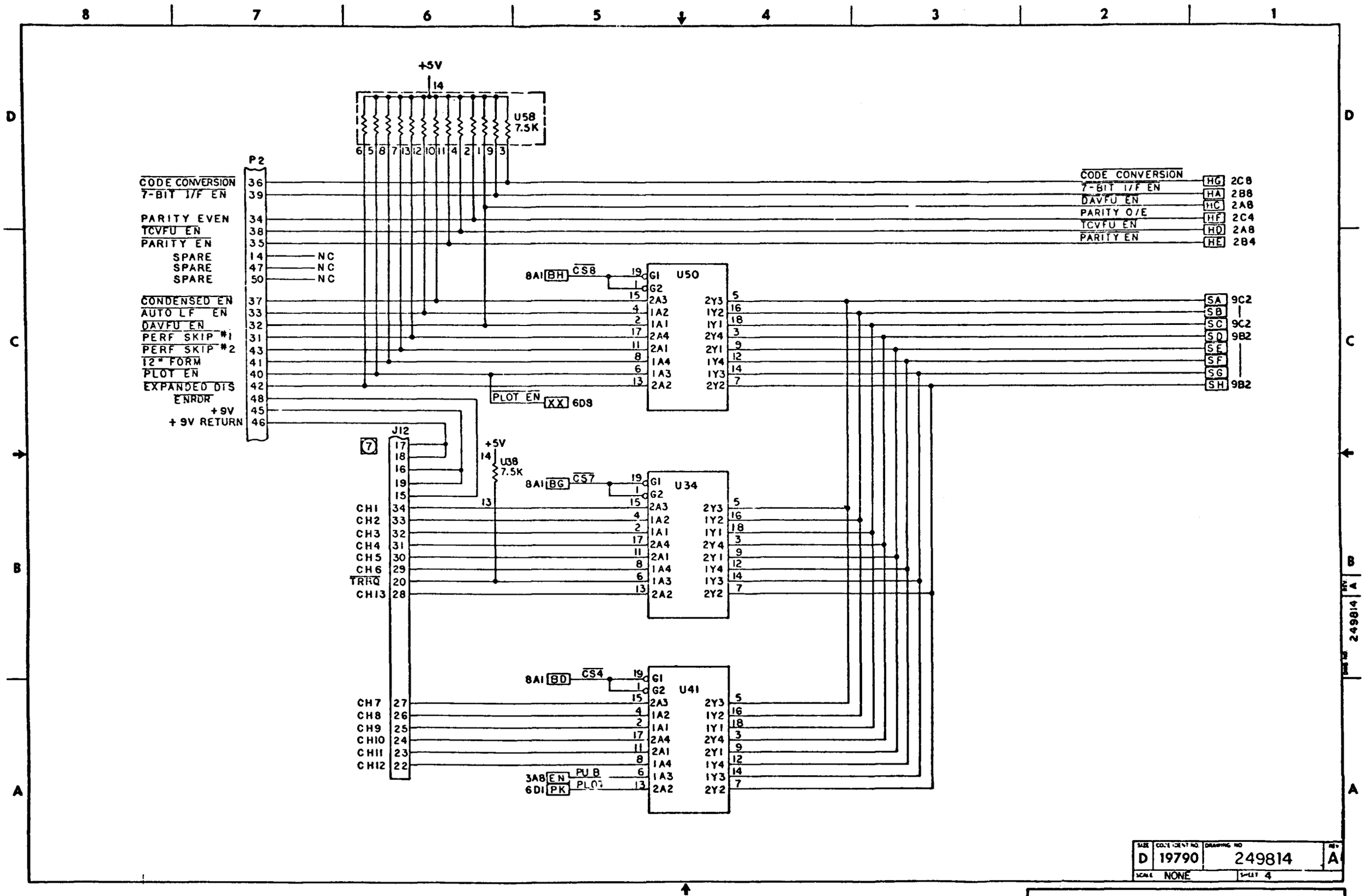

SIZE	CODE IDENT NO.	DRAWING NO	REV
D	19790	249814	A
SCALE NONE		SHEET 4	

FIGURE 3 (SH 4 OF 9)
CIRCUIT CARD ASSEMBLY,
SHORT-LINE PARALLEL
INTERFACE

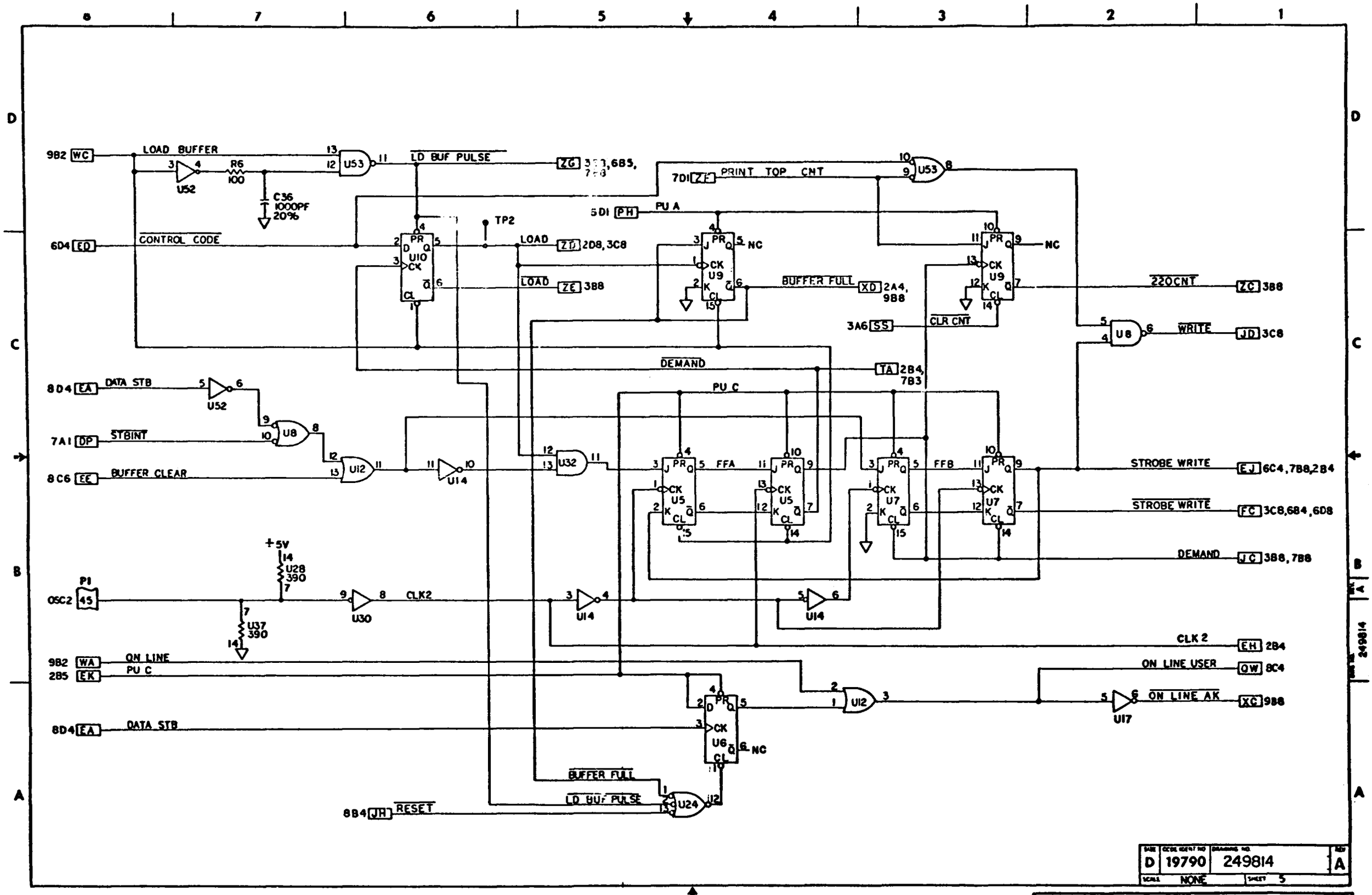

FIGURE 3 (SH 5 OF 9)
CIRCUIT CARD ASSEMBLY,
SHORT-LINE PARALLEL
INTERFACE

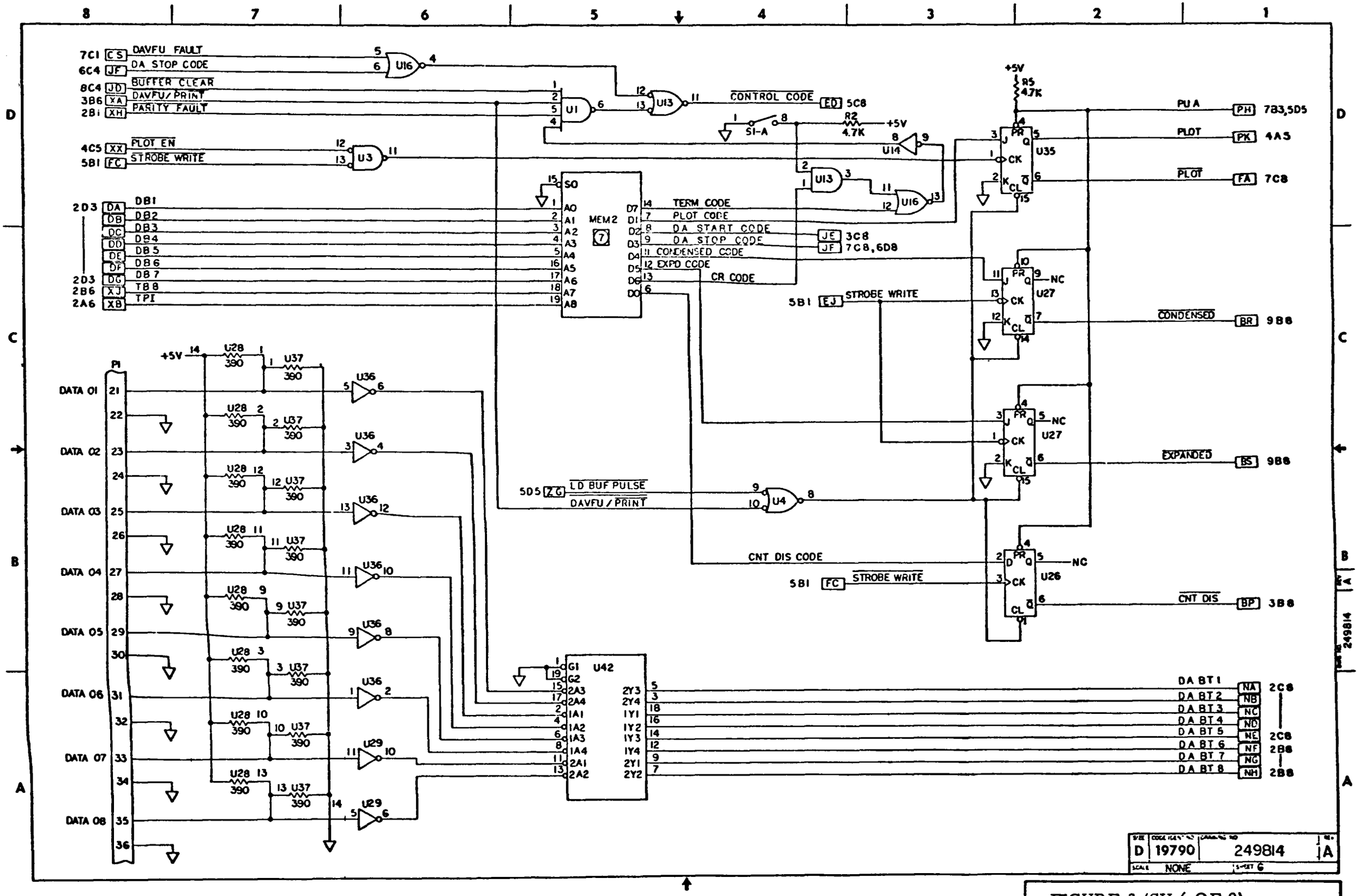

FIGURE 3 (SH 6 OF 9)
CIRCUIT CARD ASSEMBLY,
SHORT-LINE PARALLEL
INTERFACE

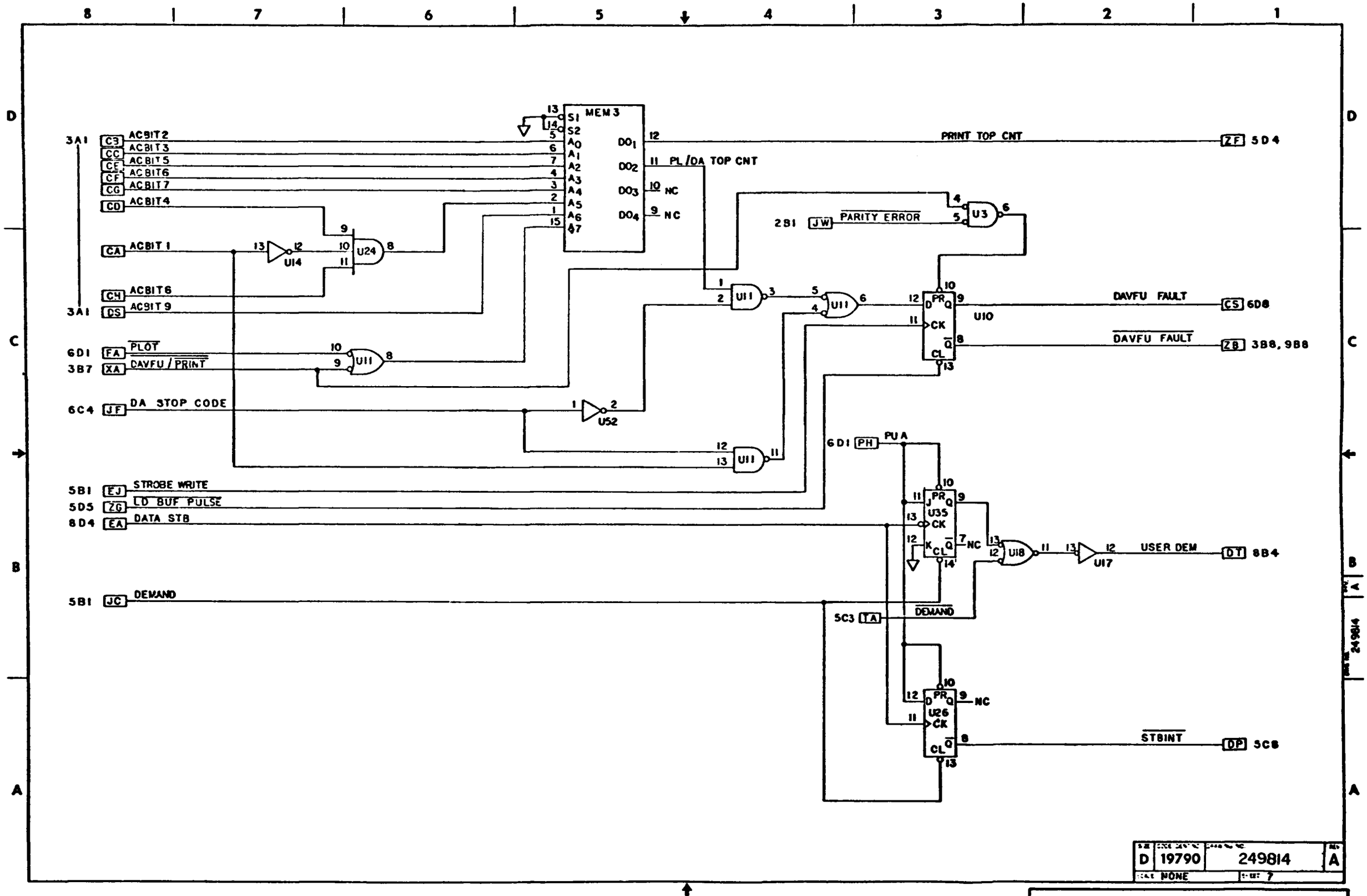

FIGURE 3 (SH 7 OF 9)
CIRCUIT CARD ASSEMBLY,
SHORT-LINE PARALLEL
INTERFACE

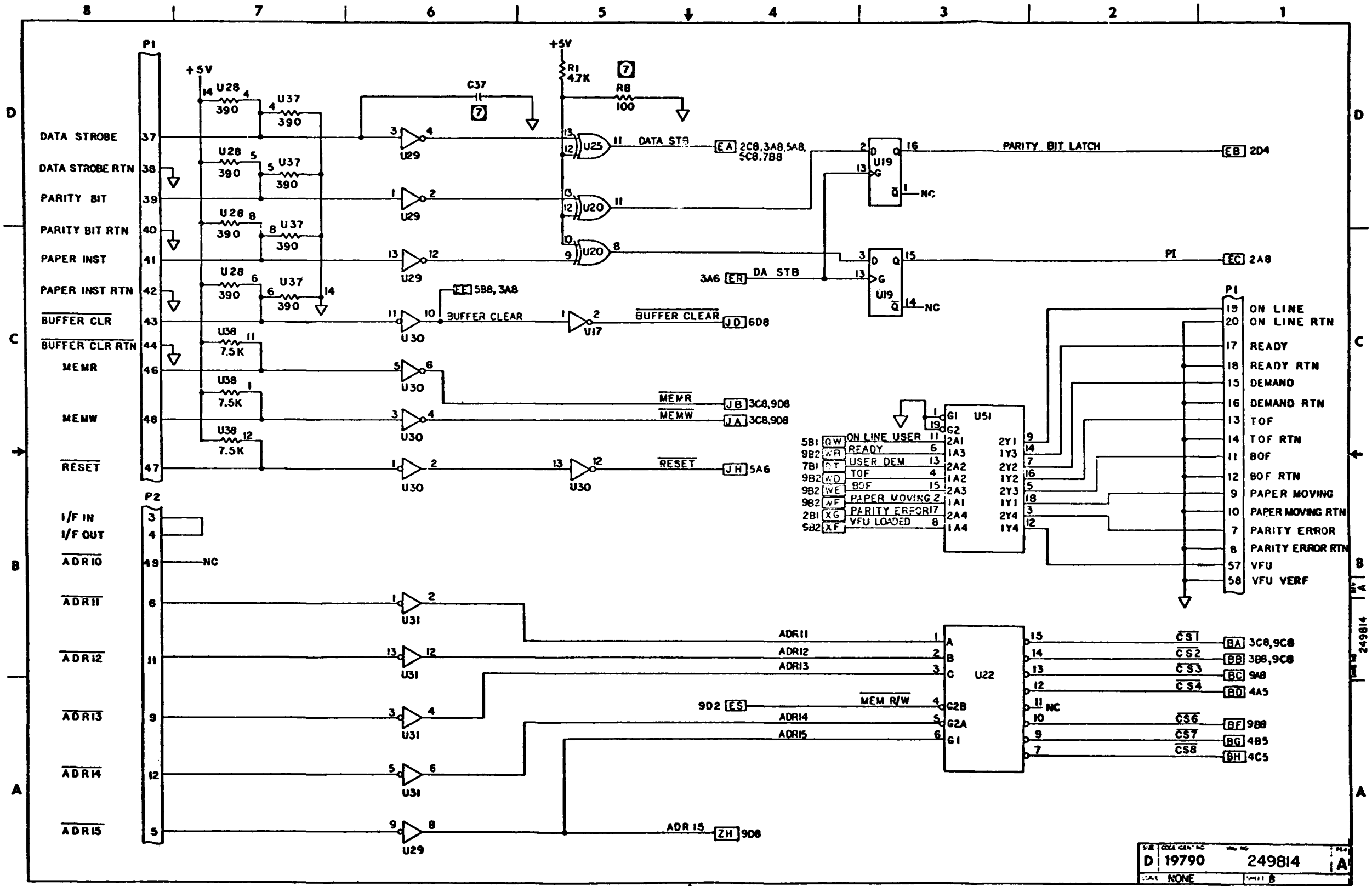

FIGURE 3 (SH 8 OF 9)
CIRCUIT CARD ASSEMBLY,
SHORT-LINE PARALLEL
INTERFACE

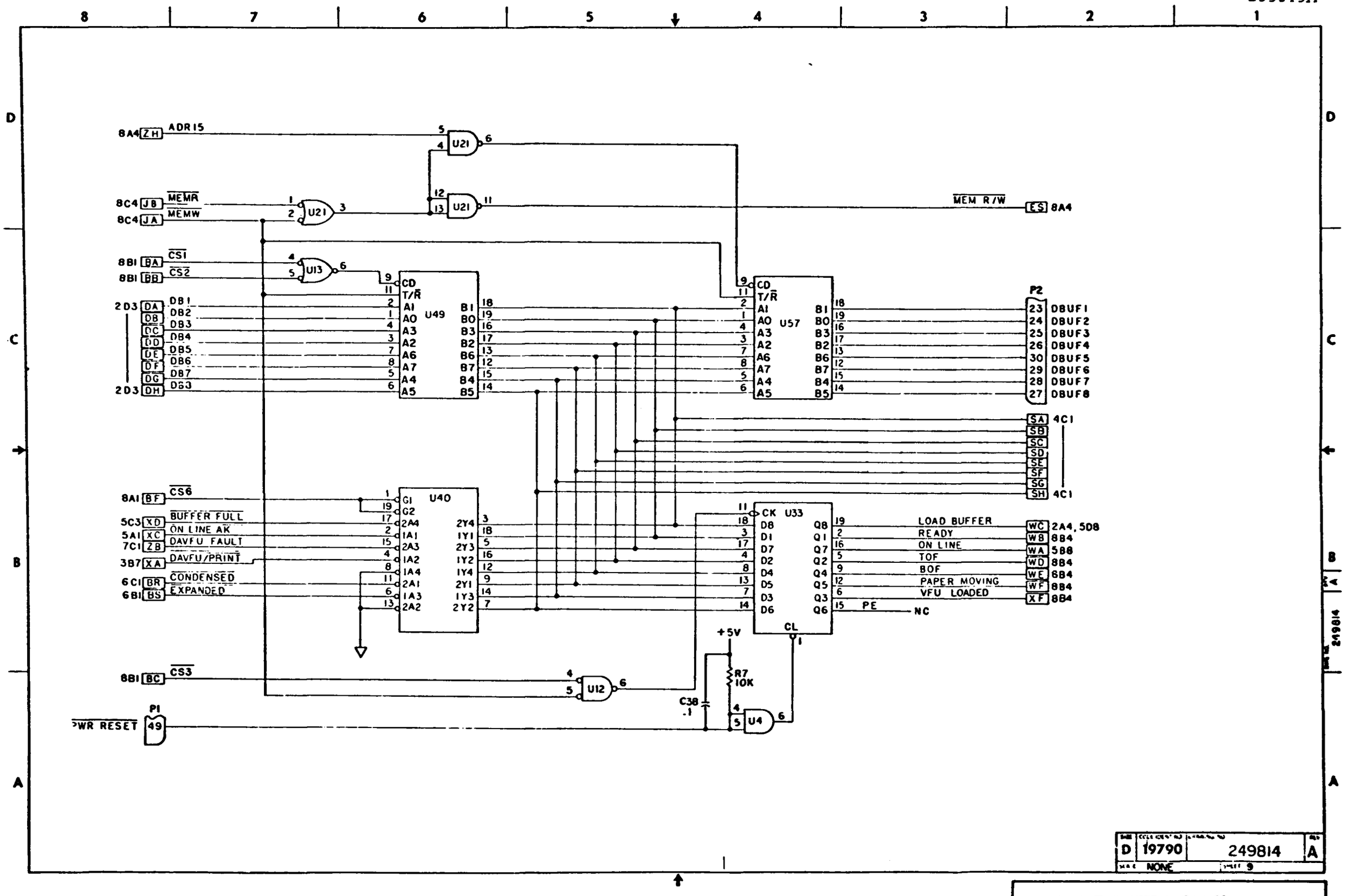

FIGURE 3 (SH 9 OF 9)
CIRCUIT CARD ASSEMBLY,
SHORT-LINE PARALLEL
INTERFACE

13. MAKE ADJUSTMENTS TO R4 AND R5 PER 245505.

[12] COMPONENTS ARE SPECIFIED ON PROCESSOR INSTL. PER PROD. STRUCTURE CHART 245503

[11] OPTIONAL ITEMS: NOT USED IN 249670-001 ASSY.

10. INTERPRET LOGIC SYMBOLS PER DPC SPEC 850025. SYMBOLS INDICATE LOGICAL COMBINATION OF THE INPUT SIGNALS.

[9] COMPONENT IS SPECIFIED ON CHARACTER SET INSTL. PER PROD. STRUCTURE CHART 245503.

8. REFER TO MOTHER BOARD SCHEMATIC 245694 FOR OFF-BOARD SIGNAL LOCATIONS.

7. SOURCE AND DESTINATION POINTS OF INTERRUPTED SIGNAL LOCATIONS ARE CODED BY SHEET NO. AND ZONE LOCATION (E.G. 7C2 IS SHEET 7, ZONE C2).

6. POWER AND GROUND FOR ALL INTEGRATED CIRCUITS WILL BE AS FOLLOWS:

TOTAL NO. OF PINS/IC	+5V (VCC) PIN NO.	GND PIN NO.
8	8	4
14	14	7
16	16	8
18	18	9
20	20	10
24	24	12

EXCEPTION OF U23 +5V(V_{CC}) PIN 14 NO GND PIN

5. INTEGRATED CIRCUITS ARE:
(GENERIC PART NUMBERS PROVIDED FOR REFERENCE ONLY)

801804-001	(8080A)	U1	801802-001	(8228) U25
			801585-003	(74LS138) U26
PROM ASSY (27C8)	MEM1-4,6-8 [12]		801798-001	(75463) U27
			800400-003	(7474) U28,30
			801529-003	(74LS04) U11,29,37,40,41
801991-005	(2316E)	MEM 5 [9]	801800-003	(74LS132) U31
801180-003	(74154)	U10	801803-001	(8224) U36
801713-004	(8111A)	U12,13	801530-003	(74LS08) U38
801805-001	(8304)	U15,20	801533-003	(74LS14) U39
801693-003	(74273)	U16,18,32-35	801528-003	(74LS00) U42
801716-003	(74LS244)	U19,21,22	801584-003	(74LS02) U43-46
801006-681	(RESISTOR NETWORK)	U23	801576-003	(7432) U14,17
801023-003	(74221)	U24		

4. INTERPRET REFERENCE DESIGNATIONS PER DPC SPEC 850027.

3. INTERPRET ELECTRONIC SYMBOLS PER DPC SPEC 850026.

2. ALL CAPACITANCE VALUES ARE IN MICROFARADS, 50V.

1. ALL RESISTANCE VALUES ARE IN OHMS, 5%, 1/4W.

NOTES (UNLESS OTHERWISE SPECIFIED)

SPARE CIRCUITS

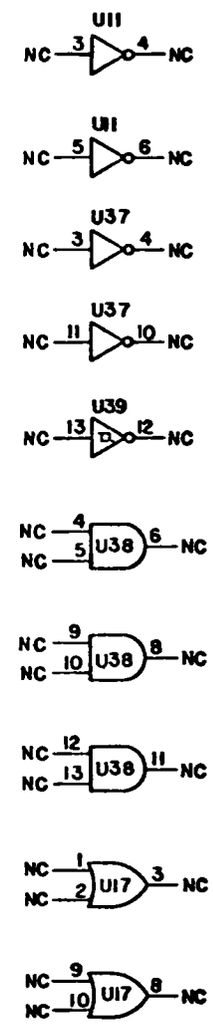

Dataproducts

TITLE SCHEMATIC – PROCESSOR

SIZE	CODE IDENT NO.	DRAWING NO.	REV
D	19790	249674	C

FIGURE 4 (SH 1 of 9)
CIRCUIT CARD ASSEMBLY, PROCESSOR

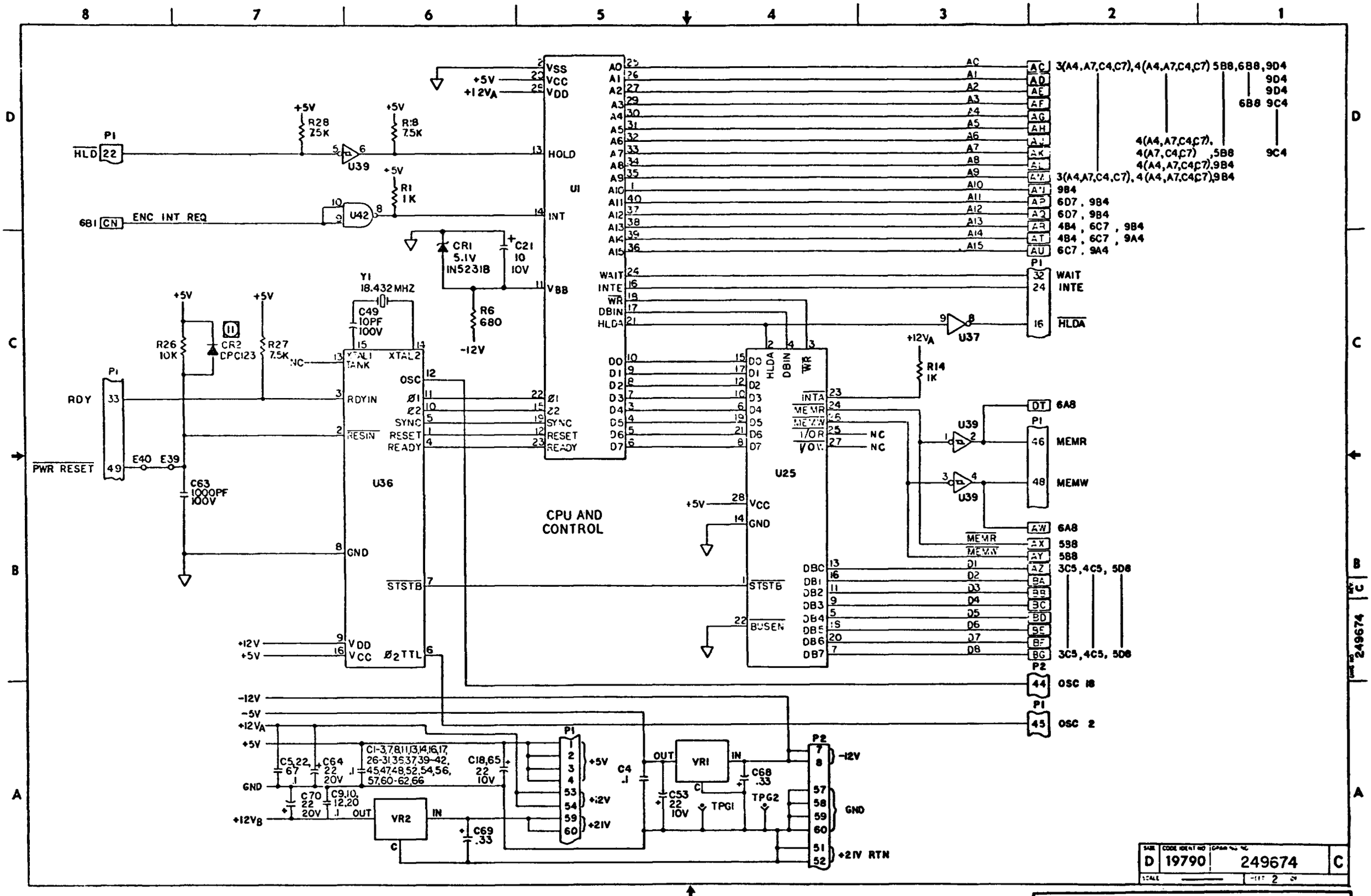

FIGURE 4 (SH 2 OF 9)
CIRCUIT CARD ASSEMBLY,
PROCESSOR

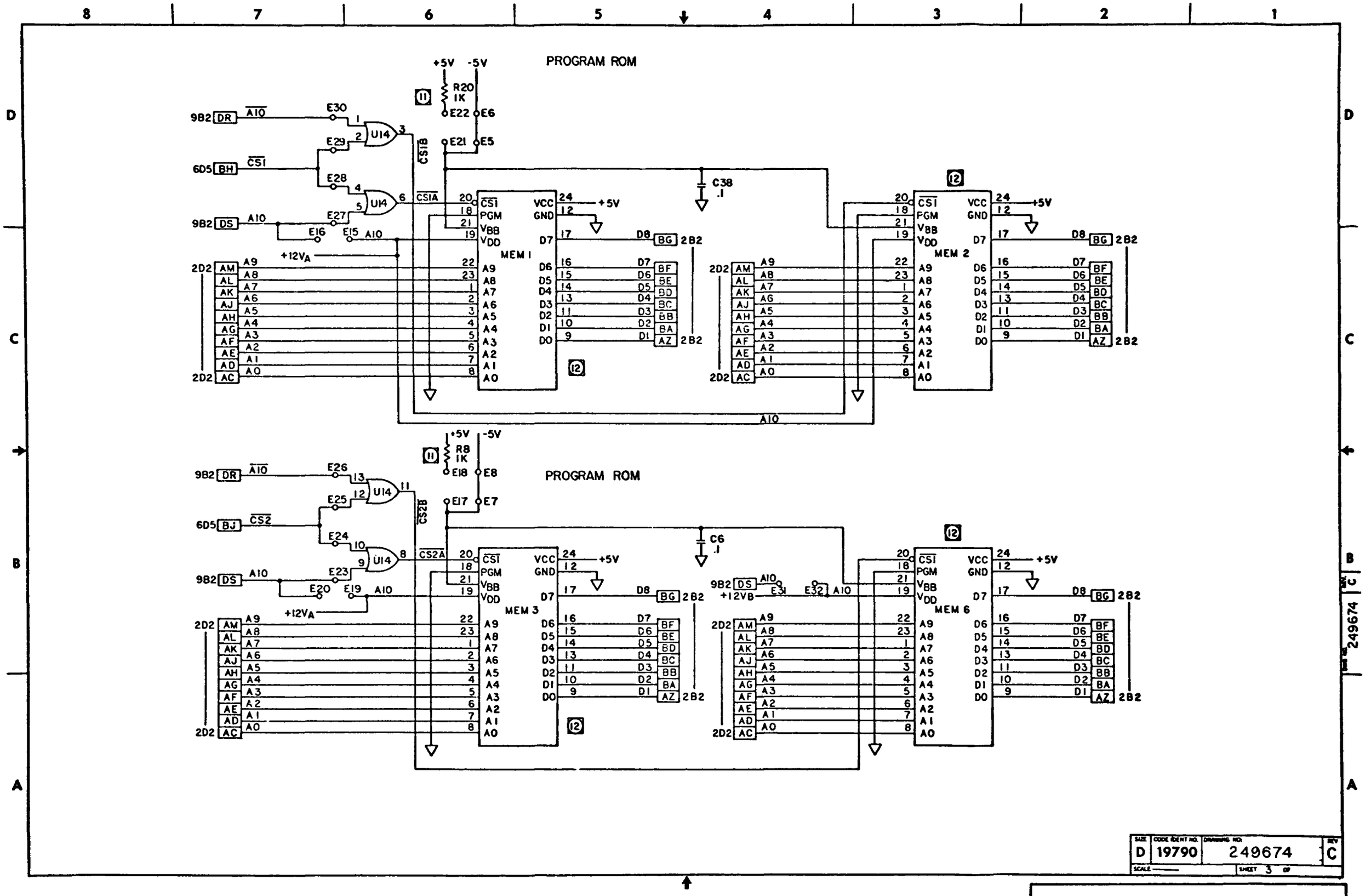

FIGURE 4 (SH 3 OF 9)
CIRCUIT CARD ASSEMBLY,
PROCESSOR

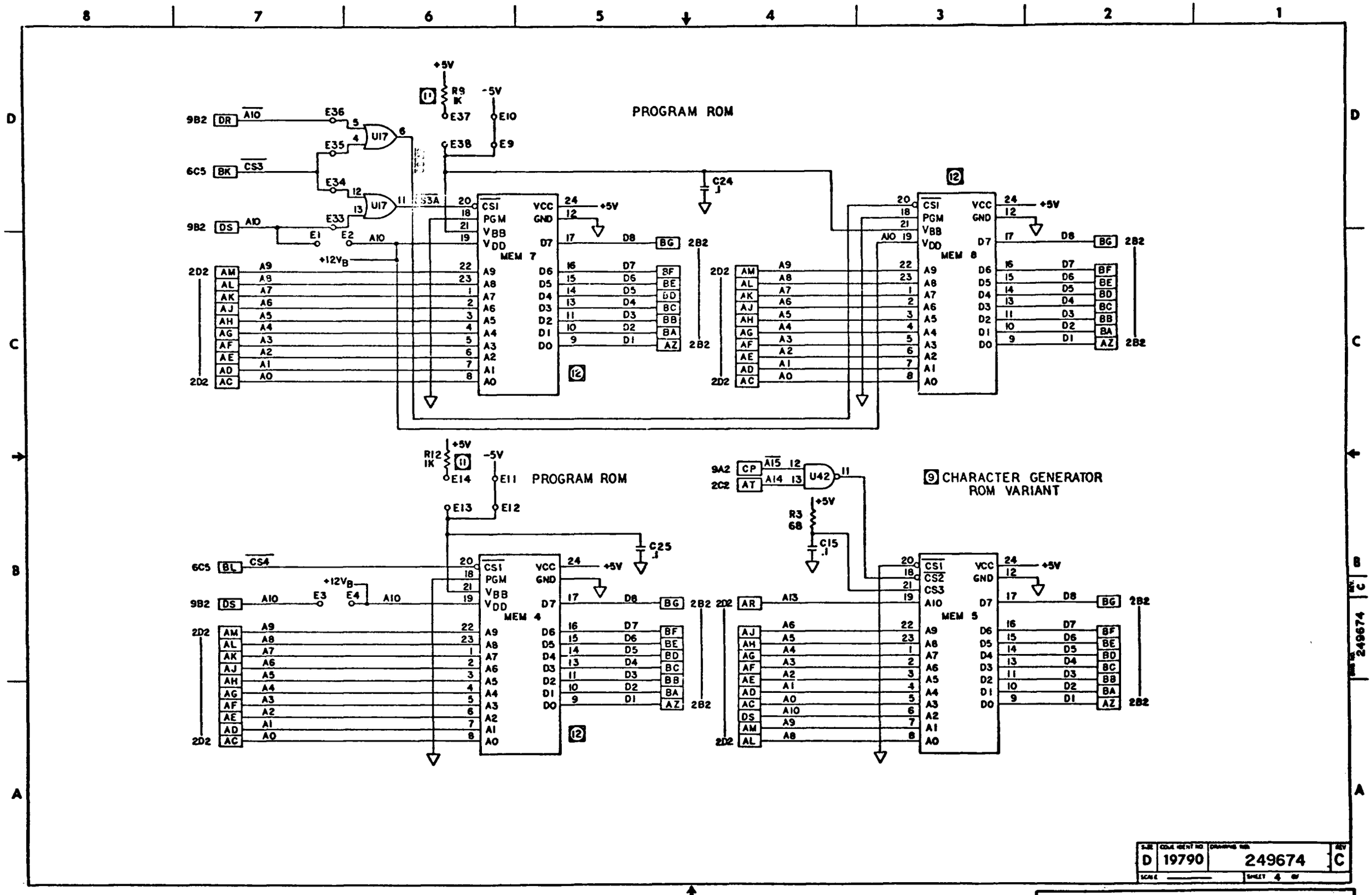

FIGURE 4 (SH 4 OF 9)
CIRCUIT CARD ASSEMBLY,
PROCESSOR

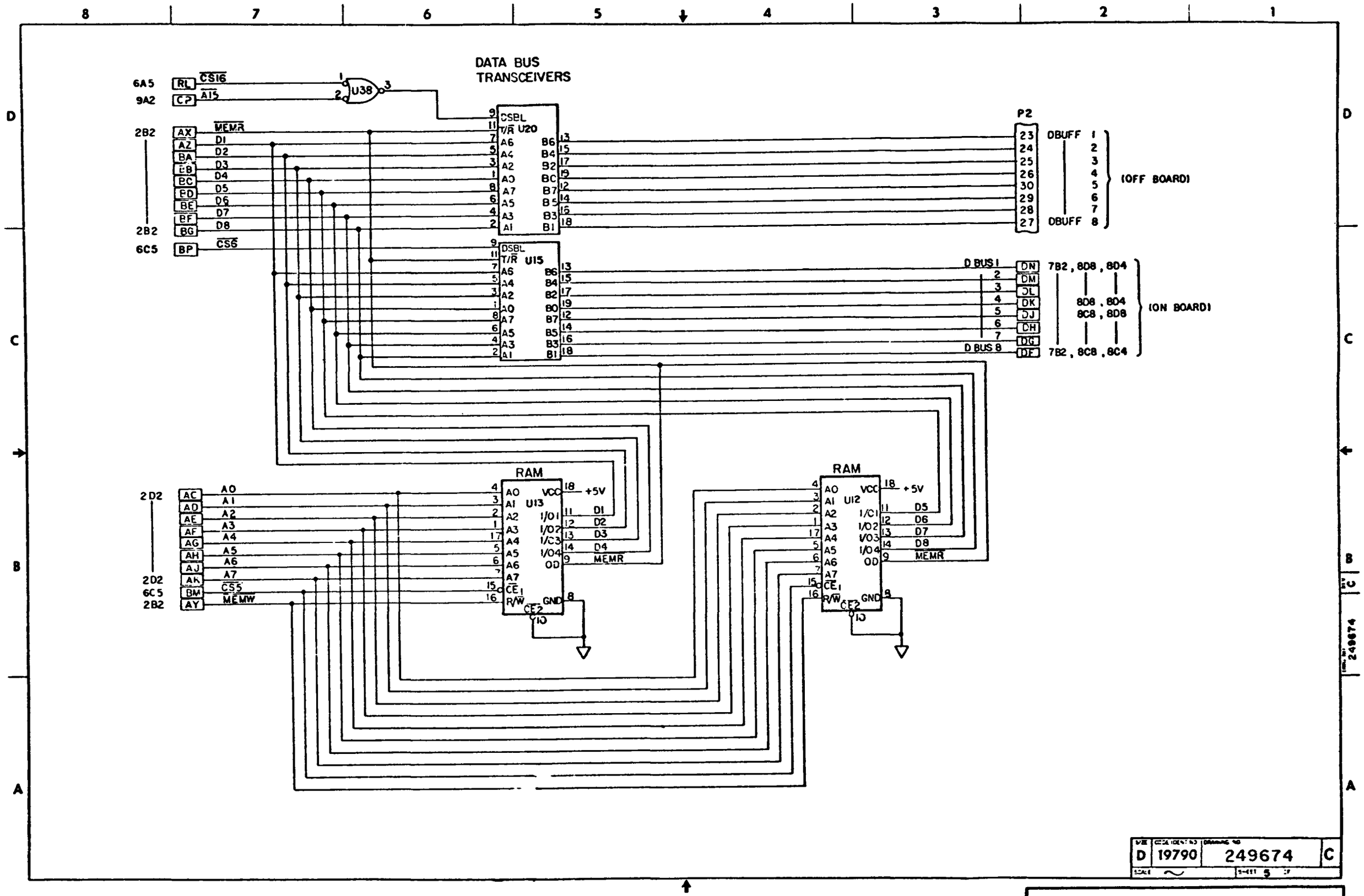

SIZE	CODE IDENT NO	DRAWING NO	
D	19790	249674	C
SCALE ~		SHEET 5 OF	

FIGURE 4 (SH 5 OF 9)
CIRCUIT CARD ASSEMBLY,
PROCESSOR

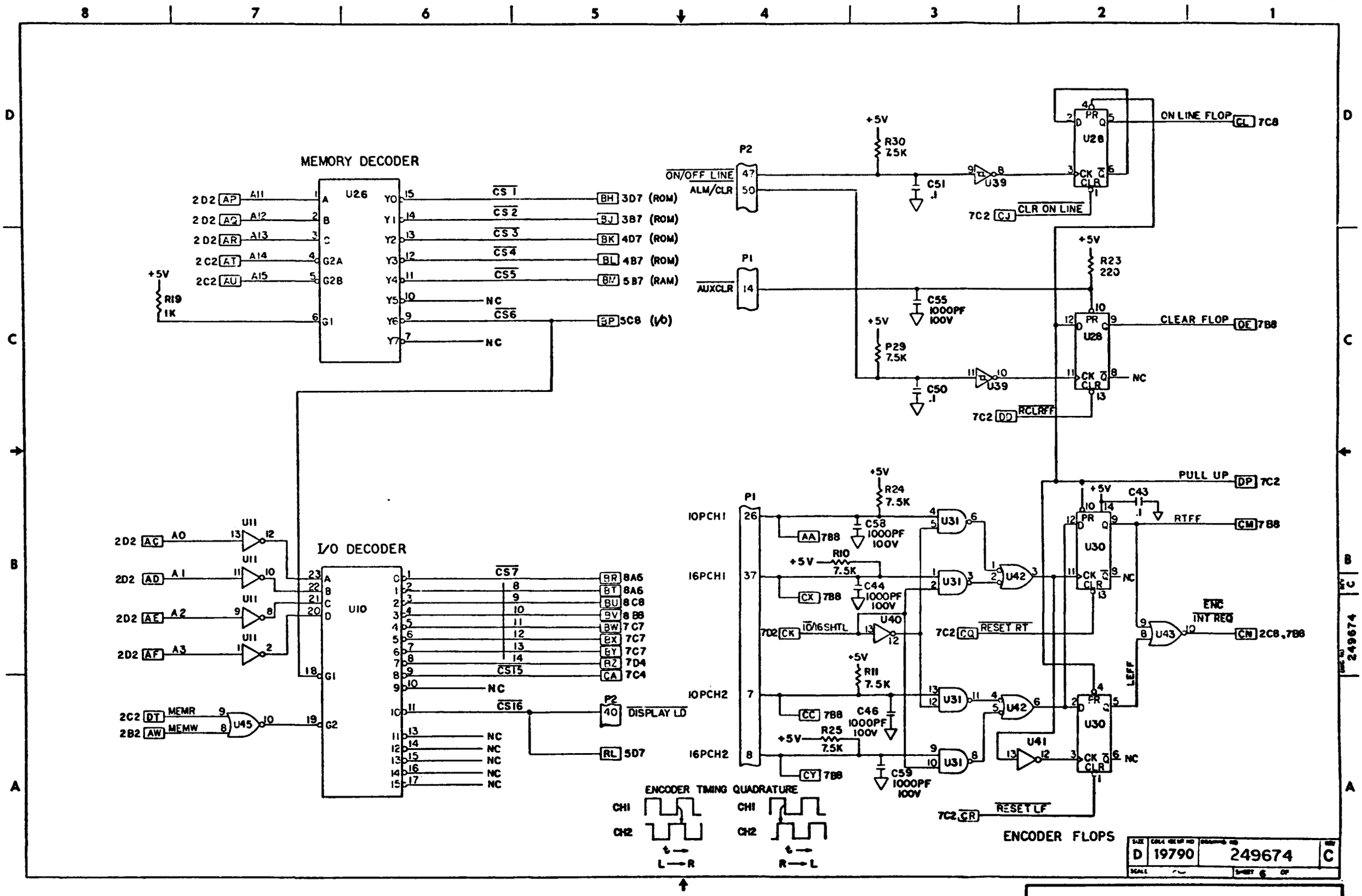

FIGURE 4 (SH 6 OF 9)
CIRCUIT CARD ASSEMBLY,
PROCESSOR

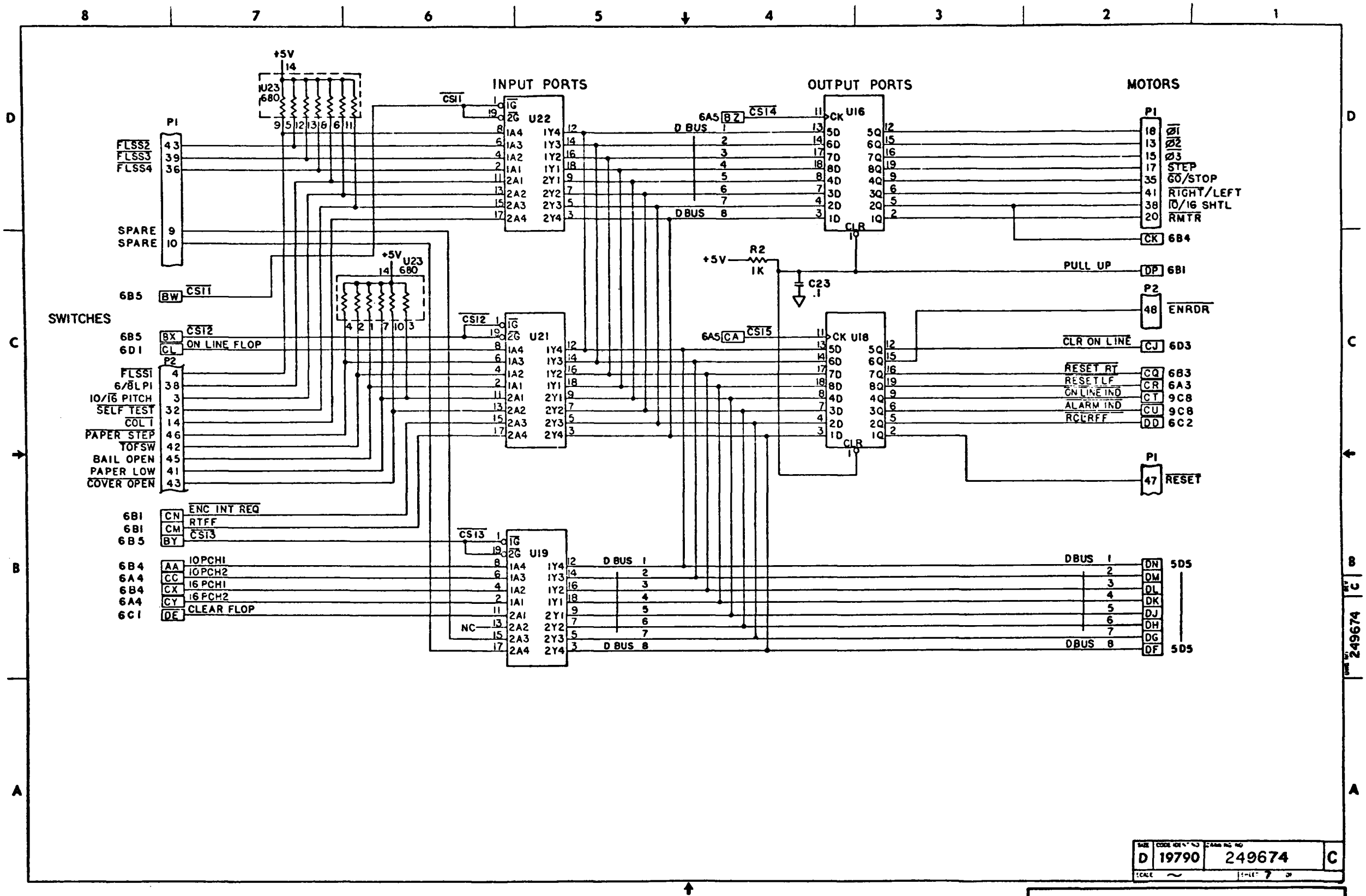

FIGURE 4 (SH 7 OF 9)
CIRCUIT CARD ASSEMBLY,
PROCESSOR

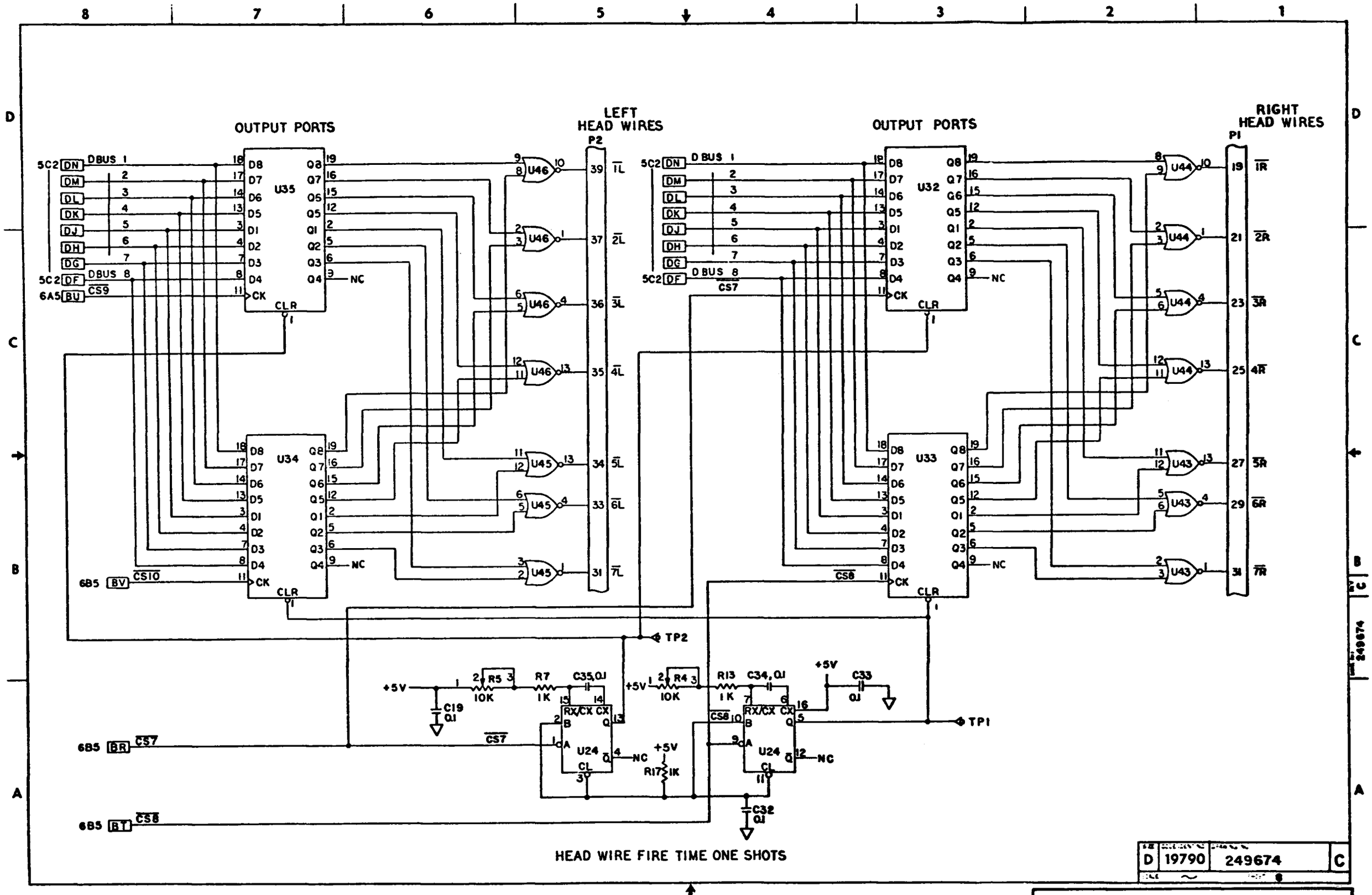

FIGURE 4 (SH 8 OF 9)
CIRCUIT CARD ASSEMBLY,
PROCESSOR

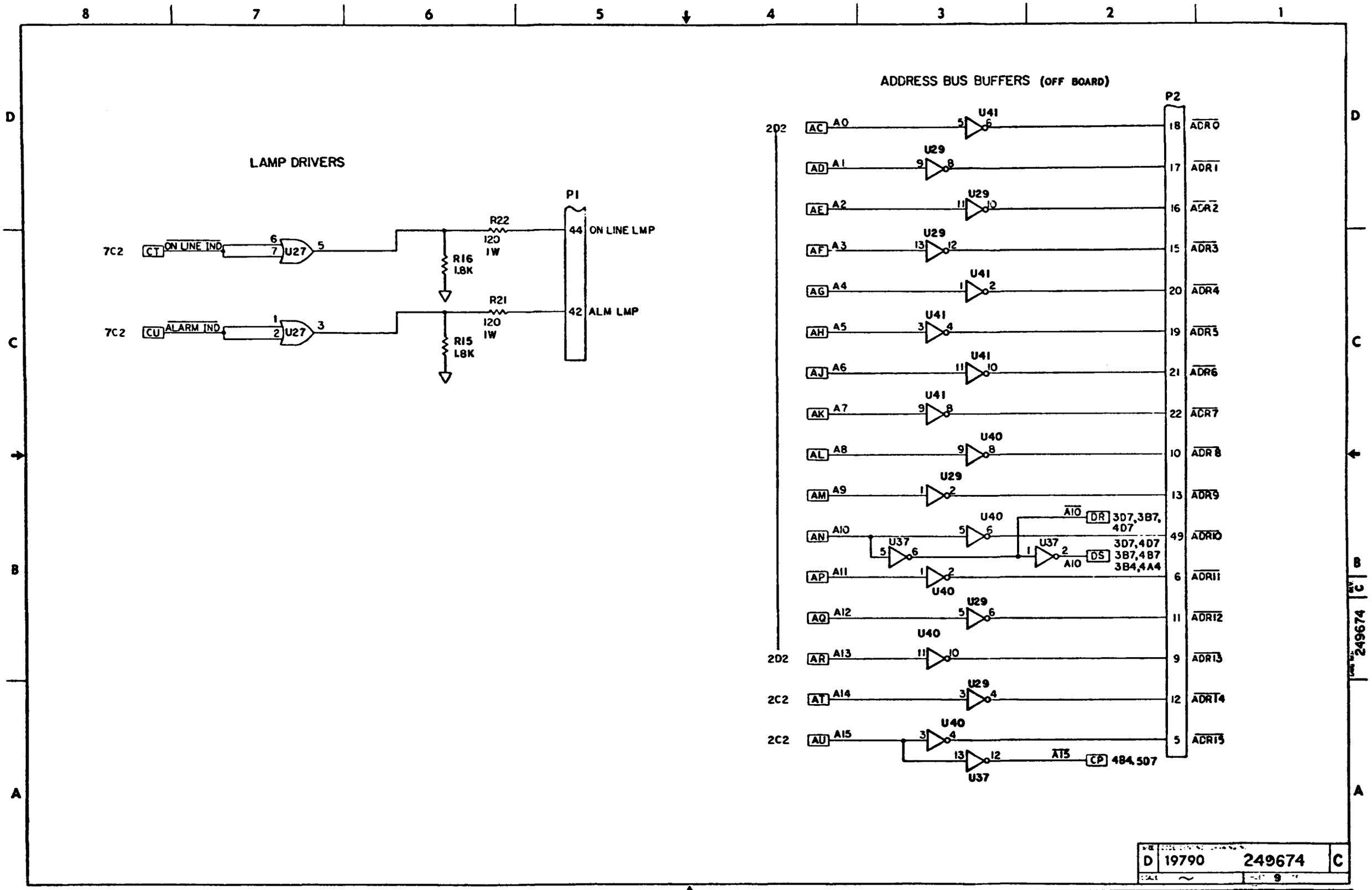

FIGURE 4 (SH 9 OF 9)
CIRCUIT CARD ASSEMBLY,
PROCESSOR

8. INTERPRET LOGIC SYMBOLS PER DPC SPEC 850025 SYMBOLS INDICATE THE INTENDED LOGICAL COMBINATION OF THE INPUT SIGNALS.

7. SOURCE AND DESTINATION POINTS OF INTERRUPTED SIGNAL LOCATIONS ARE CODED BY SHEET NO. AND ZONE LOCATION(E.G. 7C2 IS SHEET 7, ZONE C2).

6. POWER AND GROUND FOR ALL INTEGRATED CIRCUITS WILL BE AS FOLLOWS:

TOTAL NO OF PINS/IC	+5 Vcc PIN NO	GND PIN NO
14	14	7

5. INTEGRATED CIRCUITS ARE:
(GENERIC PART NO ARE FOR REFERENCE ONLY)

801879-001	TLI 182C	U6
801806-001	LM301	U1,2,3,7
801257-001	LM339	U11
801808-001	NE555	U5
801528-003	74LS00	U14
801807-003	74LS03	U13
801838-003	74LS33	U8
810118-003	74122	U10
801558-003	74LS136	U4
RESISTOR NETWORKS.		
801006-752	7.5K	U9,12

4. INTERPRET REFERENCE DESIGNATIONS PER DPC SPEC 850027

3. INTERPRET ELECTRIC SYMBOLS PER DPC SPEC 850026

2. ALL CAPACITANCE VALUES ARE IN MICROFARADS 20%, 50 VOLTS

1. ALL RESISTOR VALUES ARE IN OHMS, 5%, 1/4W.

NOTES (UNLESS OTHERWISE SPECIFIED)

Dataproducts

TITLE SCHEMATIC - MOTOR DRIVER

SIZE	CODE IDENT NO	DRAWING NO	REV
D	19790	245799	B

SCALE — SHEET 1 OF 4

245799 B

Figure 5 (SH 1 of 4)
Circuit Card Assembly,
Motor Driver

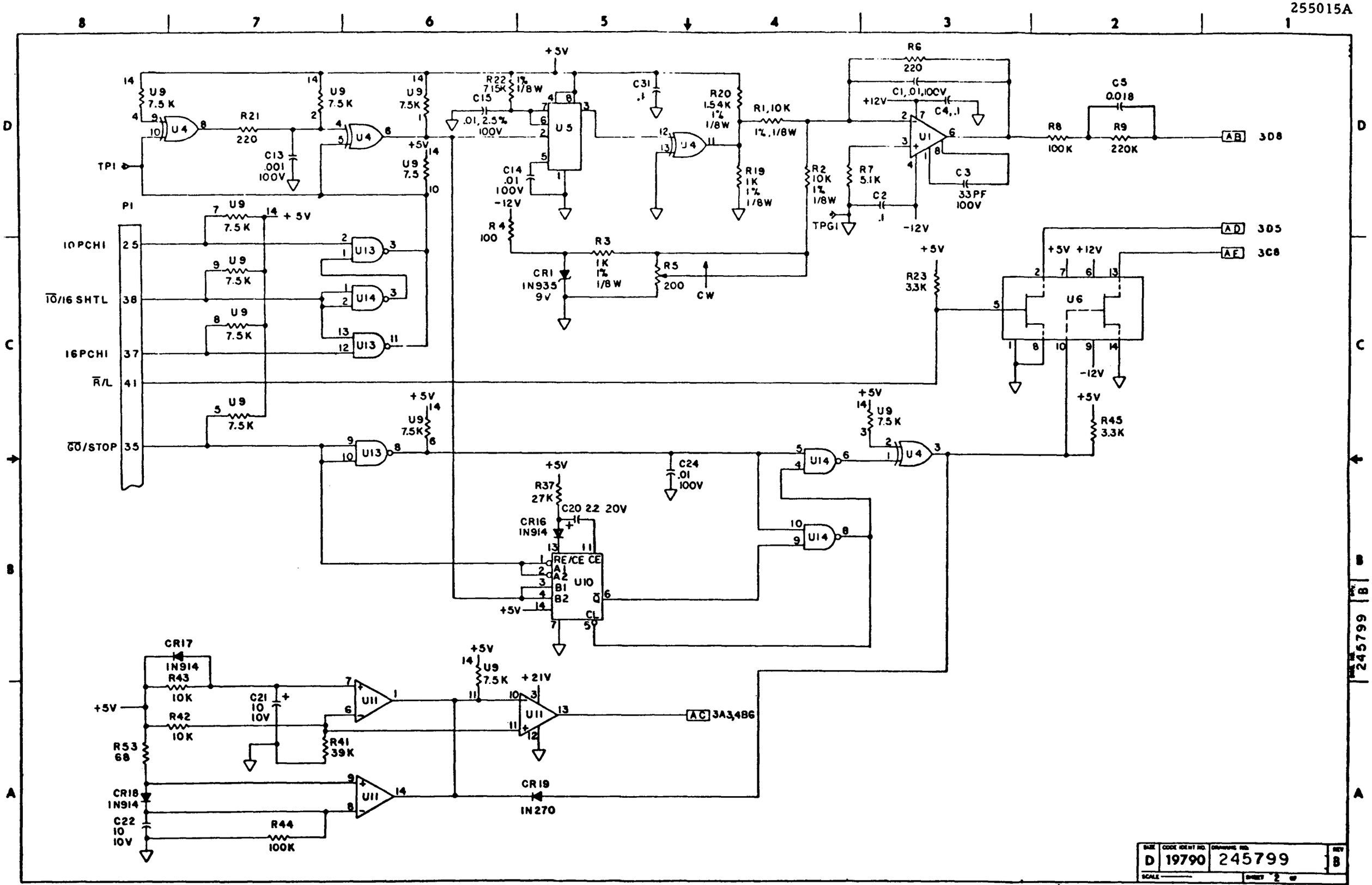

SIZE	CODE IDENT NO.	DRAWING NO.	REV
D	19790	245799	B

SCALE ——— SHEET 2 OF

Figure 5 (SH 2 of 4)
Circuit Card Assembly,
Motor Driver

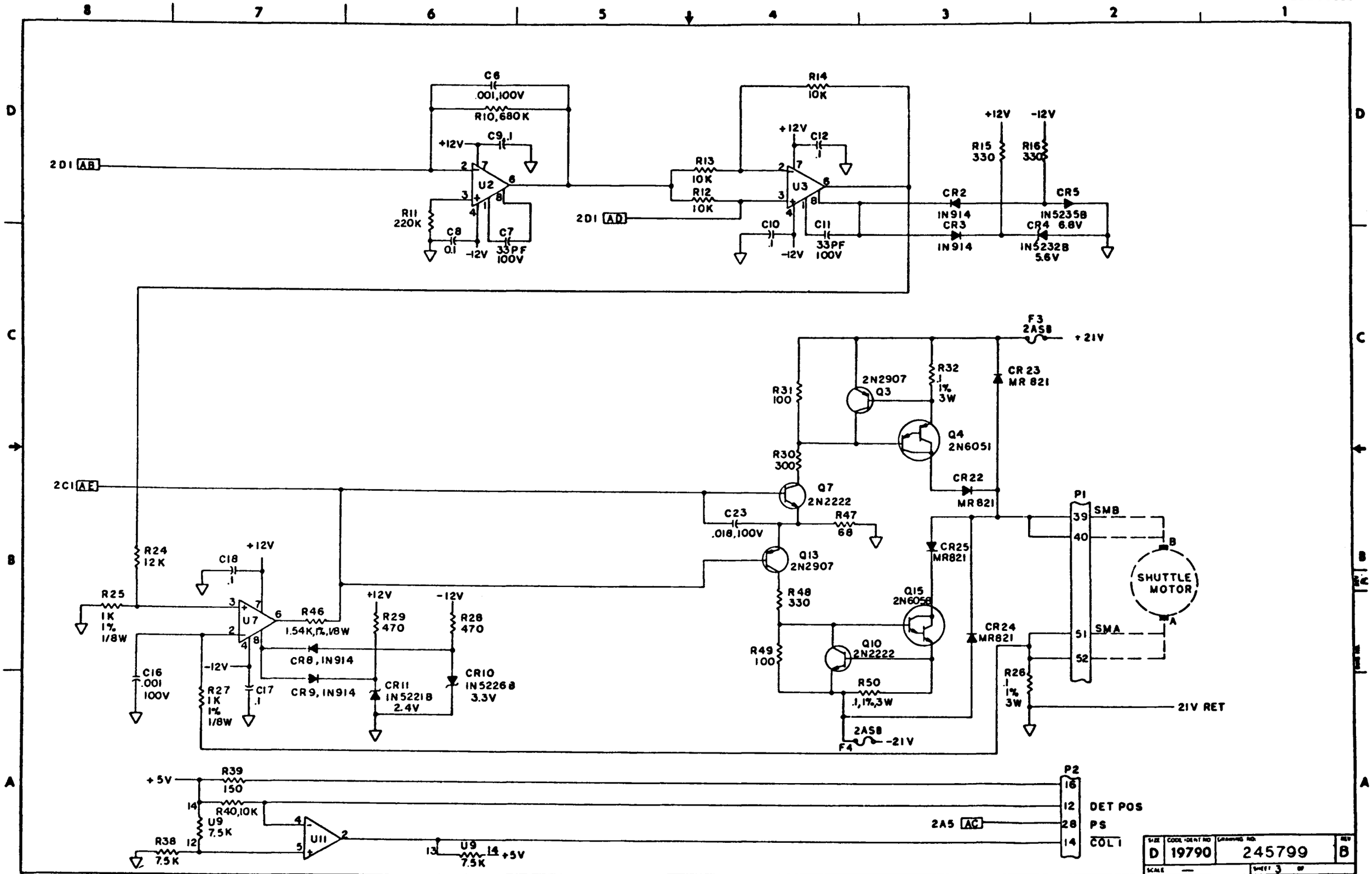

Figure 5 (SH 3 of 4)
Circuit Card Assembly,
Motor Driver

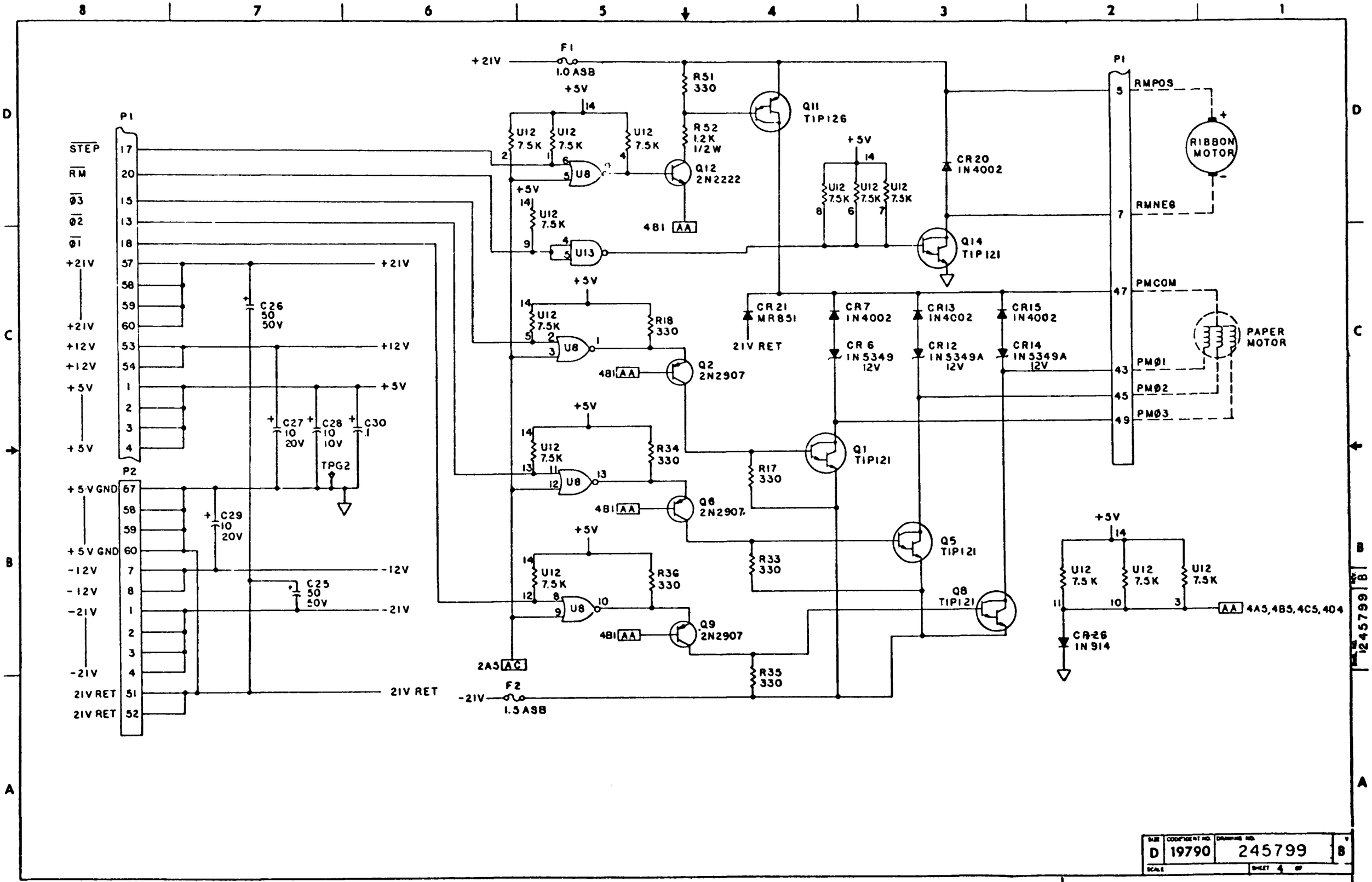

Figure 5 (SH 4 of 4)
Circuit Card Assembly,
Motor Driver

10. ALL DIODES ARE IN4934

9. TRANSISTORS ARE:

TIP 121 Q30-43
TIP 126 Q15-29

8. REFER TO MOTHER BOARD SCHEMATIC 245694 FOR OFF-BOARD SIGNAL LOCATIONS.

7. SOURCE AND DESTINATION POINTS OF INTERRUPTED SIGNAL LOCATIONS ARE CODED BY SHEET NO AND ZONE LOCATION(E.G. 7C2 IS SHEET 7, ZONE C 2)

6. POWER AND GROUND FOR ALL INTEGRATED CIRCUITS WILL BE AS FOLLOWS:

TOTAL NO. OF PINS/IC	+5V (Vcc) PIN NO.	GND PIN NO.
8	8	4
14	14	7

5. INTEGRATED CIRCUITS ARE:
(GENERIC PART NOS. ARE FOR REFERENCE ONLY.)

800024-003	7400	U12,16,19,23
801798-003	75463	U13,14,17,18,21,22,24

RESISTOR NETWORKS ARE:

801957-681	U1,5,7,11	801957-152	U3,20
801597-821	U2,8	801957-272	U4,9,10,15

4. ALL CAPACITANCE VALUES ARE IN MICROFARADS, 20%, 50 VOLTS.

3. ALL RESISTANCE VALUES ARE IN OHMS, 5%, 1/4W.

2. INTERPRET REFERENCE DESIGNATIONS PER DPC SPEC 850027.

1. INTERPRET ELECTRONIC SYMBOLS PER DPC SPEC 850026.

NOTES (UNLESS OTHERWISE SPECIFIED)

Dataproducts

TITLE SCHEMATIC-WIRE DRIVER

SIZE	CODE IDENT NO.	DRAWING NO.	REV
D	19790	245679	A

SCALE — SHEET OF 3

245679 A

Figure 6 (SH 1 of 3)
Circuit Card Assembly,
Wire Driver

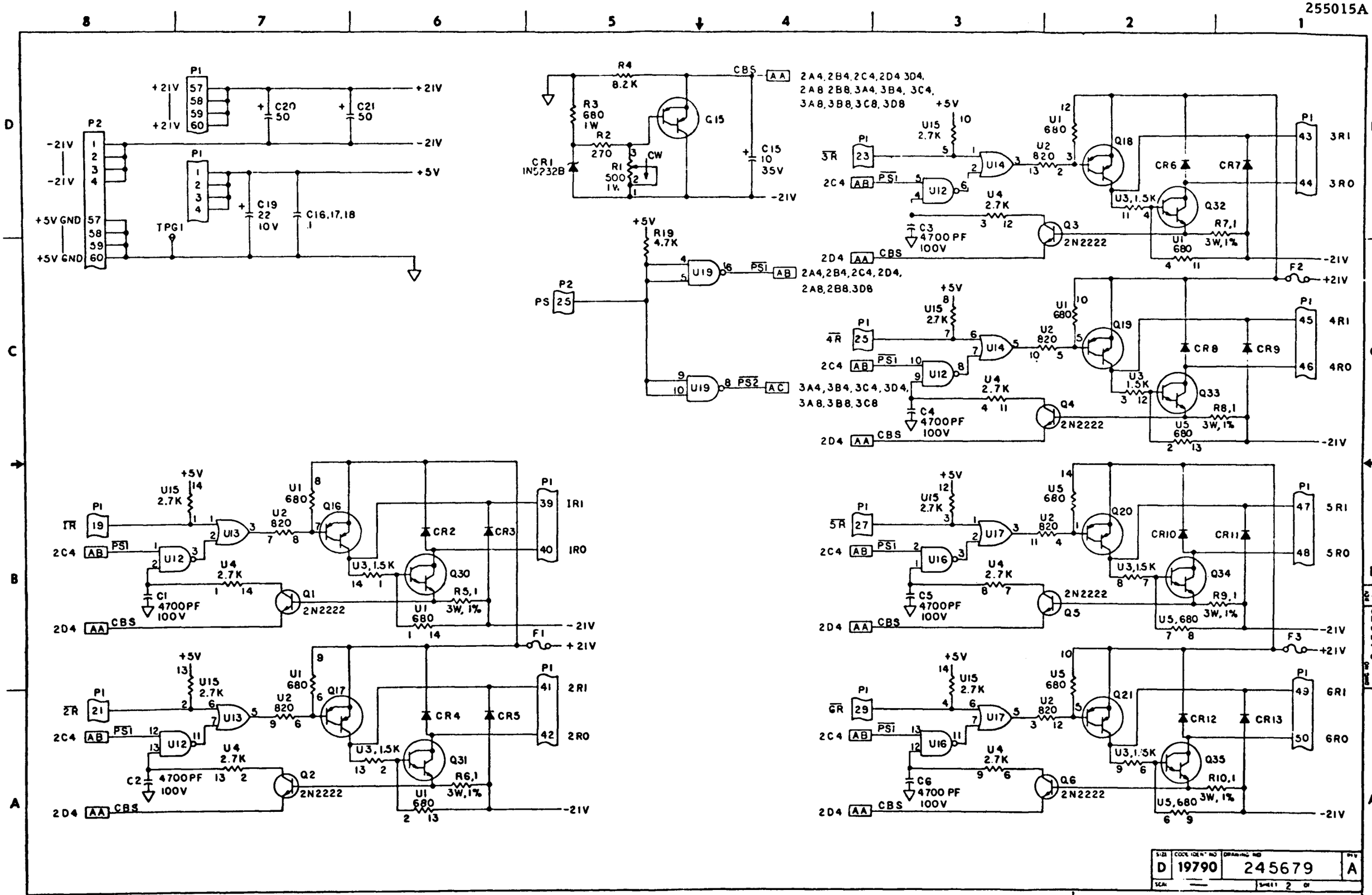

Figure 6 (SH 2 of 3)
Circuit Card Assembly,
Wire Driver

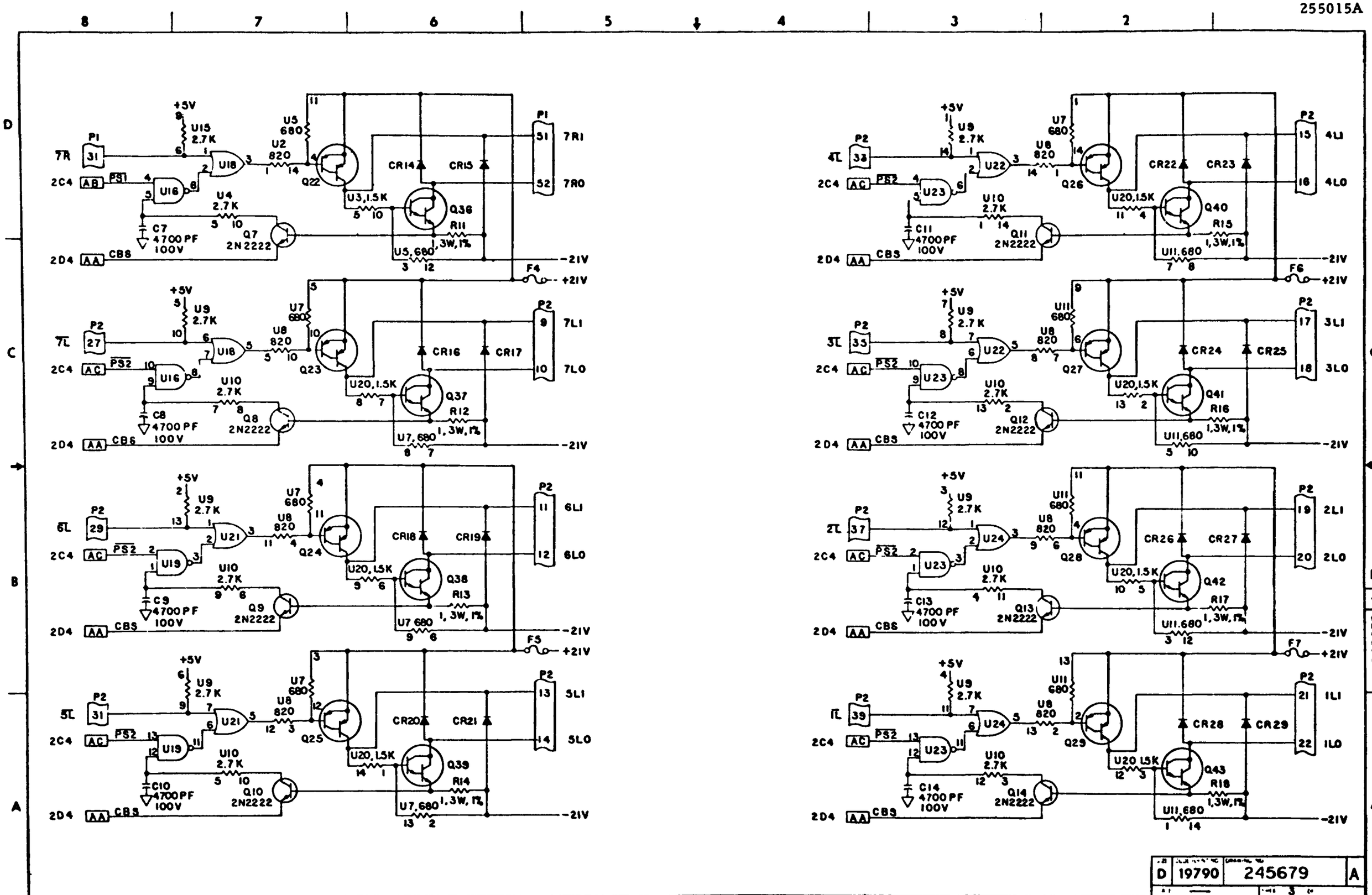

Figure 6 (SH 3 of 3)
Circuit Card Assembly,
Wire Driver

3. INTEGRATED CIRCUITS ARE:
(GENERIC PART NUMBERS ARE PROVIDED FOR REFERENCE ONLY)
801204 (7812) U3
801205 (7912) U2
801179 (723) U1
2. ALL CAPACITANCE VALUES ARE IN MICROFARADS, +80%, -20%, 50V
1. ALL RESISTANCE VALUES ARE IN OHMS, 5%, 1/4W

NOTES: UNLESS OTHERWISE SPECIFIED

Dataproducts			
TITLE SCHEMATIC-REGULATOR			
SIZE D	CODE IDENT NO 19790	DRAWING NO 249789	8
SCALE —		SHEET 1 OF 2	

Figure 7 (SH 1 of 2)
Circuit Card Assembly,
Regulator

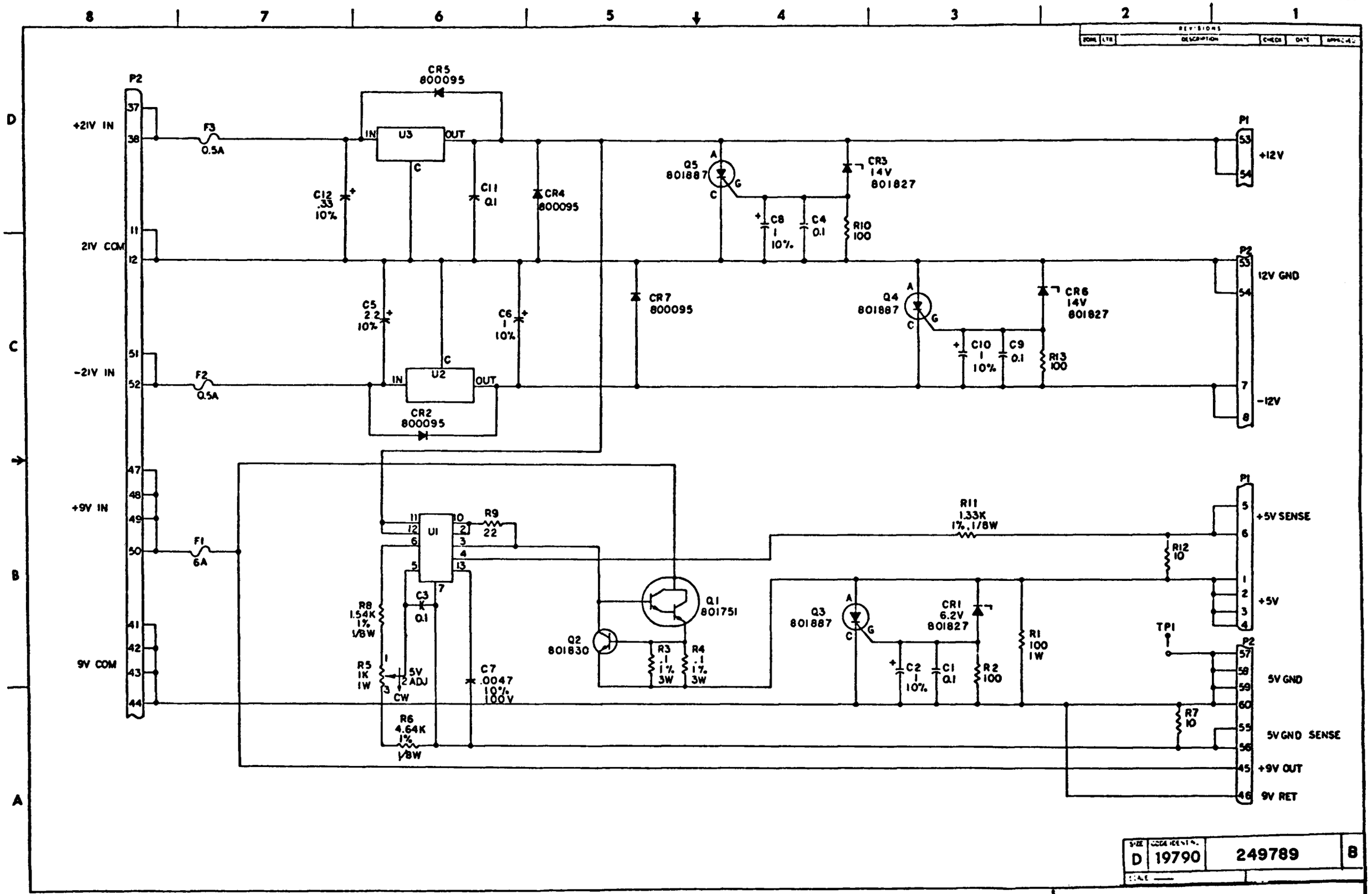

Figure 7 (SH 2 of 2)
Circuit Card Assembly,
Regulator

5 TERMINAL BLOCK REFERENCE DESIGNATIONS: PIN NO. FOLLOWED BY FRONT (F) OR BACK (B). E.G. 22B IS PIN NO. 22 ON BACK (B) OF TERMINAL BLOCK.

4. INTERPRET REFERENCE DESIGNATIONS PER DPC SPEC 850027.

3. INTERPRET ELECTRONIC SYMBOLS PER DPC SPEC 850026.

2. ALL CAPACITANCE VALUES ARE IN MICROFARADS, +75%-10%, 30 VOLTS.

1. ALL RESISTANCE VALUES ARE IN OHMS, 5%, 20 W.

NOTES (UNLESS OTHERWISE SPECIFIED)

Dataproducts

TITLE SCHEMATIC — STANDARD POWER SUPPLY

SIZE	CODE IDENT NO.	DRAWING NO.	REV
D	19790	245870	A

SCALE — SHEET 1 OF 3

Figure 8 (SH 1 of 3)
Standard
Power Supply

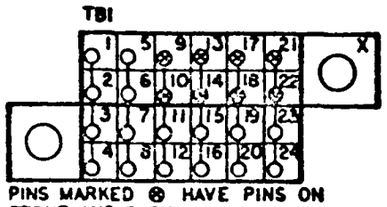

PINS MARKED ⊗ HAVE PINS ON FRONT AND BACK.

DOMESTIC TRANSFORMER		
COLOR CODE	115V, 60Hz (-001) FROM	TO
BLK	TRANS	TB1-2F
BLK		TB1-6F
RED		C4
RED		C4
BLU		CR1-AC
BLU		CR1-AC
BLU/BLK		TB1-17F
YEL		F2
YEL		CR2-AC

PI GND CONFIGURATIONS			
COLOR CODE	FROM	TO	VARIABLES
GRN	TB1-11F	P1-5	DIRECT GND
GRN	TB1-11F	P1-6	CAPACITIVE GND
GRN	TB1-11F	P1-8	ISOLATED GND

	TB1		
	COLOR CODE	FROM	TO
POWER HARNESS	GRN	P1-5	TB1-11F
	BLU	C2-NEG	TB1-2F
	WHT	C1-POS	TB1-13F
	BLK	C2-POS	TB1-18F
AC LINE HARNESS	GRN	SIDE FRAME	TB1-10F
	BLK	L1-3	TB1-4
	WHT	L1-1	TB1-8F
	GRN	LINE COVER	TB1-12F
FAN HARN	BLK	FAN	TB1-3
	BLK	FAN	TB1-7

SIZE	CODE IDENT NO	DRAWING NO	REV
D	19790	245870	A
SCALE ——		SHEET 2 OF	

Figure 8 (SH 2 of 3)
Standard
Power Supply

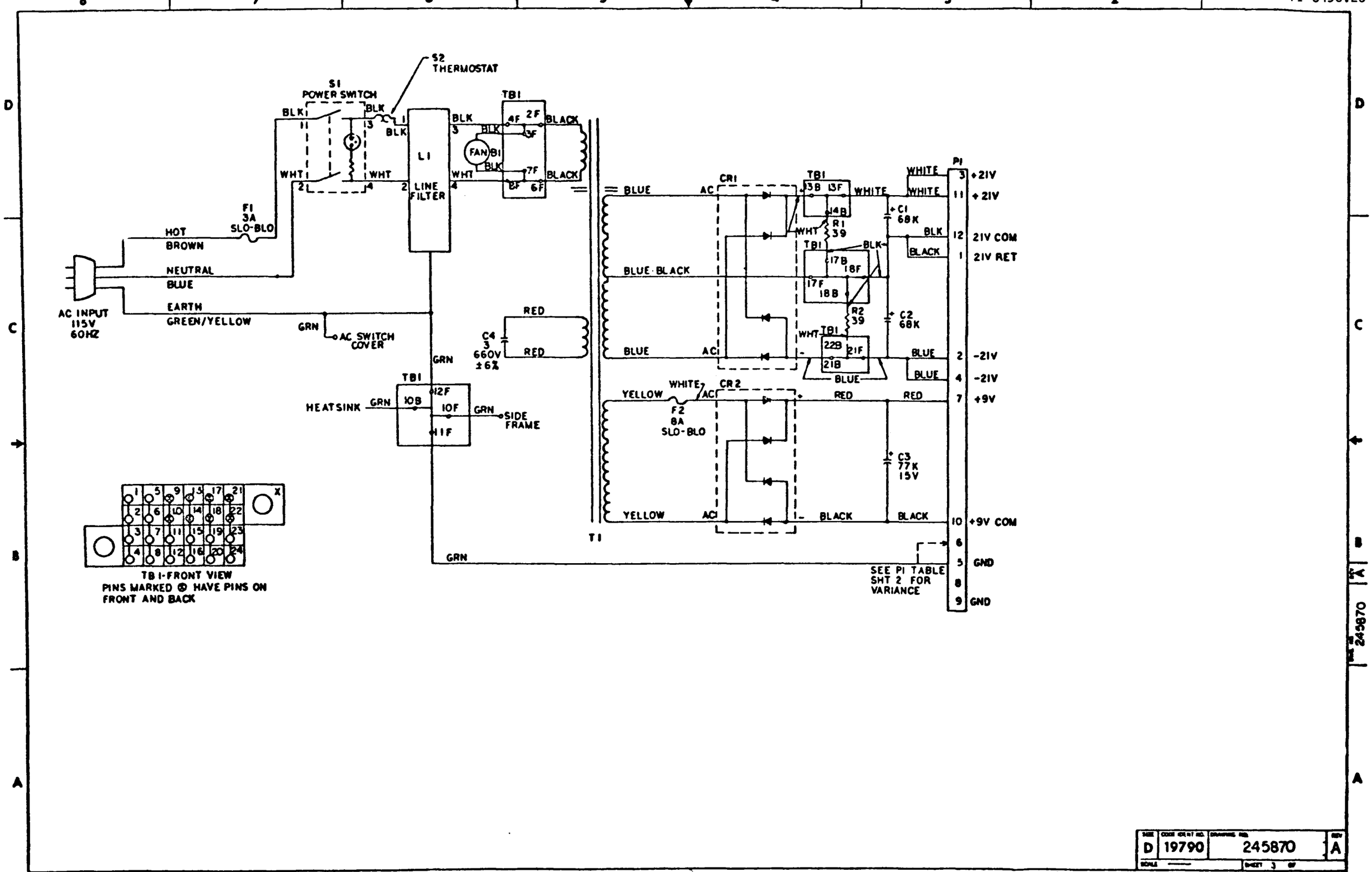

Figure 8 (SH 3 of 3)
Standard
Power Supply

5. TERMINAL BLOCK REFERENCE DESIGNATIONS: PIN NO. FOLLOWED BY FRONT (F) OR BACK (B). E.G. 22B IS PIN NO. 22 ON BACK (B) OF TERMINAL BLOCK.

4. INTERPRET REFERENCE DESIGNATIONS PER DPC SPEC 850027.

3. INTERPRET ELECTRONIC SYMBOLS PER DPC SPEC 850026.

2. ALL CAPACITANCE VALUES ARE IN MICROFARADS, +75%, -10%, 30 VOLT.

1. ALL RESISTANCE VALUES ARE IN OHMS, 5%, 20 W.

NOTES (UNLESS OTHERWISE SPECIFIED)

Dataproducts

TITLE			
SCHEMATIC — UNIVERSAL POWER SUPPLY			
SIZE D	CODE IDENT NO 19790	DRAWING NO 245871	REV A
SCALE —		SHEET 1 OF 3	

Figure 9 (SH 1 of 3)
Universal
Power Supply

TB1

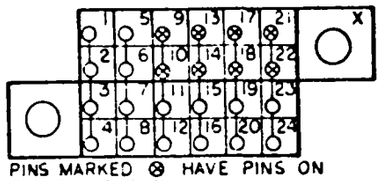

PINS MARKED ⊗ HAVE PINS ON FRONT AND BACK.

TB2

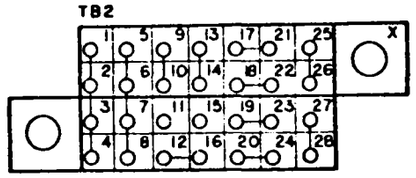

UNIVERSAL TRANSFORMER CONFIGURATION CHART									
	COLOR CODE	115V, 50Hz		115V, 60Hz		250V, 50Hz		250V, 60Hz	
		FROM	TO	FROM	TO	FROM	TO	FROM	TO
WIRE HARNESS	BLK/WHT	TB1-6F	TB2-4	TB1-6F	TB2-4	TB1-6F	TB2-4	TB1-6F	TB2-4
	RED	TB1-2F	TB2-8	TB1-2F	TB2-8	TB1-2F	TB2-16	TB1-2F	TB2-16
	VIO/WHT	TB2-21	CR1-AC	TB2-22	CR1-AC	TB2-21	CR1-AC	TB2-22	CR1-AC
	WHT	TB2-24	CR1-AC	TB2-23	CR1-AC	TB2-24	CR1-AC	TB2-23	CR1-AC
	ORN/WHT	TB2-26	F2	TB2-27	F2	TB2-26	F2	TB2-27	F2
UNIVERSAL TRANSFORMER	BRN/WHT	TRANS.	TB2-7	TRANS.	TB2-13	TRANS.	TB2-12	TRANS.	TB2-13
	BRN/YEL		TB2-14		TB2-7		TB2-14		TB2-12
	BRN		TB2-3		TB2-3		TB2-7		TB2-7
	GRN/WHT		TB2-6		TB2-9		TB2-6		TB2-9
	GRN/YEL		TB2-10		TB2-6		TB2-10		TB2-6
	GRN		TB2-2		TB2-2		TB2-2		TB2-2
	RED/WHT		C4		BASE TERM		C4		BASE TERM.
	RED/BLK		BASE TERM.		C4		BASE TERM		C4
	RED		C4		C4		C4		C4
	BLU/WHT		TB2-17		TB2-17		TB2-17		TB2-17
	BLU		TB2-18		TB2-18		TB2-18		TB2-18
	BLU/BLK		TB1-17F		TB1-17F		TB1-17F		TB1-17F
	BLU		TB2-19		TB2-19		TB2-19		TB2-19
	BLU/WHT		TB2-20		TB2-20		TB2-20		TB2-20
	YEL/WHT		TB2-25		TB2-25		TB2-25		TB2-25
	YEL/BLK		TB2-28		TB2-28		TB2-28		TB2-28
	YEL		CR2-AC		CR2-AC		CR2-AC		CR2-AC
	F1	3.0 ASB		3.0 ASB		1.5 ASB		1.5 ASB	

	TB1		
	COLOR CODE	FROM	TO
POWER HARNESS	GRN	P1-5	TB1-11F
	BLU	C2-NEG	TB1-21F
	WHT	C1-POS	TB1-13F
	BLK	C2-POS	TB1-18F
AC LINE HARNESS	GRN	SIDE FRAME	TB1-10F
	BLK	L1-3	TB1-4
	WHT	L1-4	TB1-8F
	GRN	LINE COVER	TB1-12F
FAN HARN	BLK	FAN	TB1-2-1
	BLK	FAN	TB1-2-5

P1 GND CONFIGURATION			
COLOR CODE	FROM	TO	VARIABLES
GRN	TB1-11F	P1-5	DIRECT GND
GRN	TB1-11F	P1-6	CAPACITIVE GND
GRN	TB1-11F	P1-8	ISOLATED GND

SIZE	CODE IDENT NO	DRAWING NO	REV
D	19790	245871	A
SCALE —		SHEET 2 OF	

Figure 9 (SH 2 of 3)
Universal
Power Supply

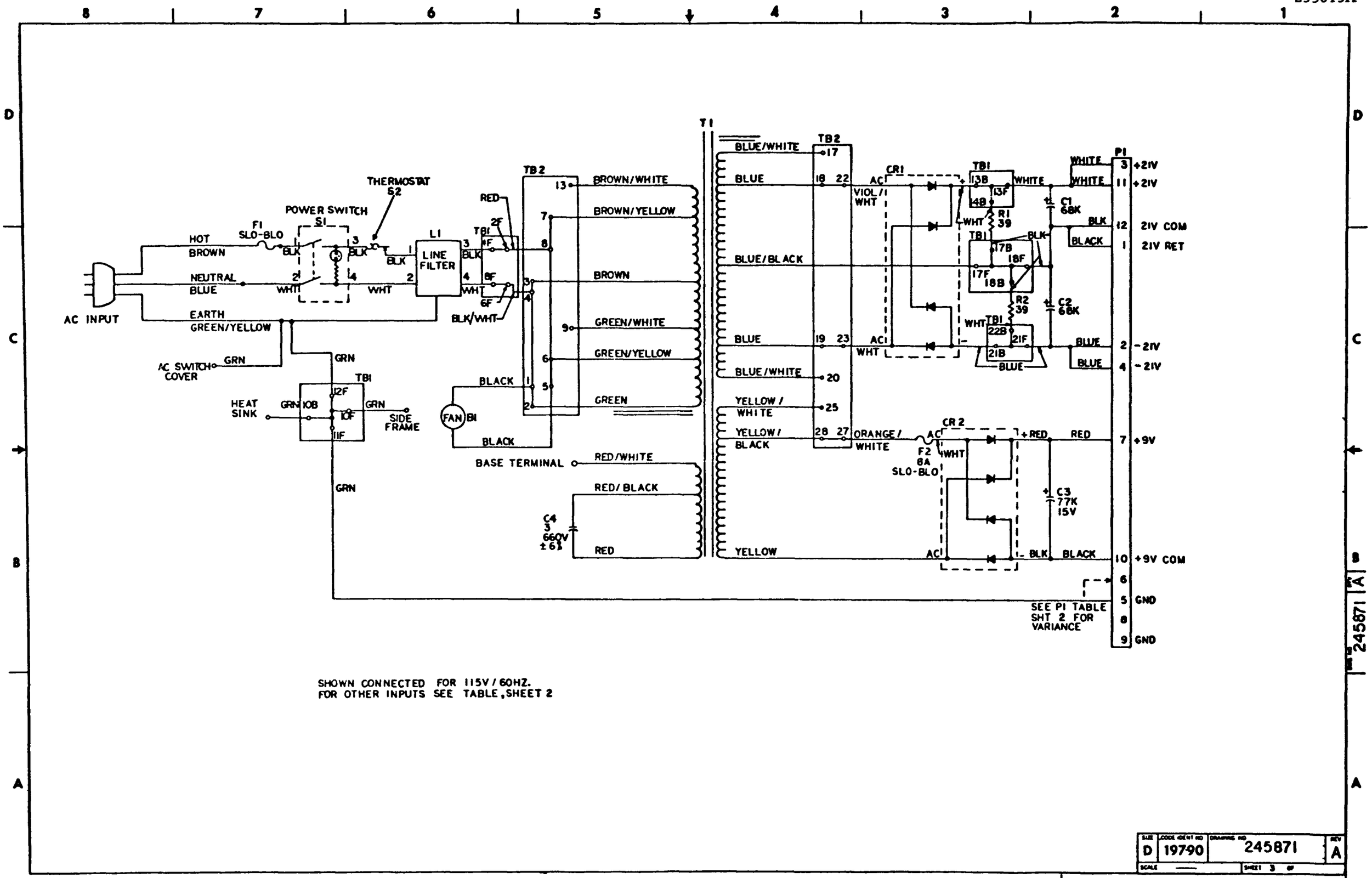

Figure 9 (SH 3 of 3)
Universal
Power Supply

5 OPTIONAL ITEMS: NOT ON -001 ASSEMBLY.

4. INTERPRET LOGIC SYMBOLS PER DPC SPEC 850025 SYMBOLS INDICATE THE INTENDED LOGICAL COMBINATION OF THE INPUT SIGNALS.

3. INTEGRATED CIRCUITS ARE:
(GENERIC PART NUMBERS ARE PROVIDED FOR "REFERENCE ONLY.")
801996-001 TIL311 U1,2

2. INTERPRET REFERENCE DESIGNATIONS PER DPC SPEC 850027.

1. INTERPRET ELECTRONIC SYMBOLS PER DPC SPEC 850026.

NOTES (UNLESS OTHERWISE SPECIFIED)

Dataproducts

TITLE SCHEMATIC — CONTROL PANEL			
SIZE D	CODE IDENT NO. 19790	DRAWING NO. 245869	REV A
SCALE ~		SHEET	OF 2

Figure 10 (SH 1 of 2)
Control Panel

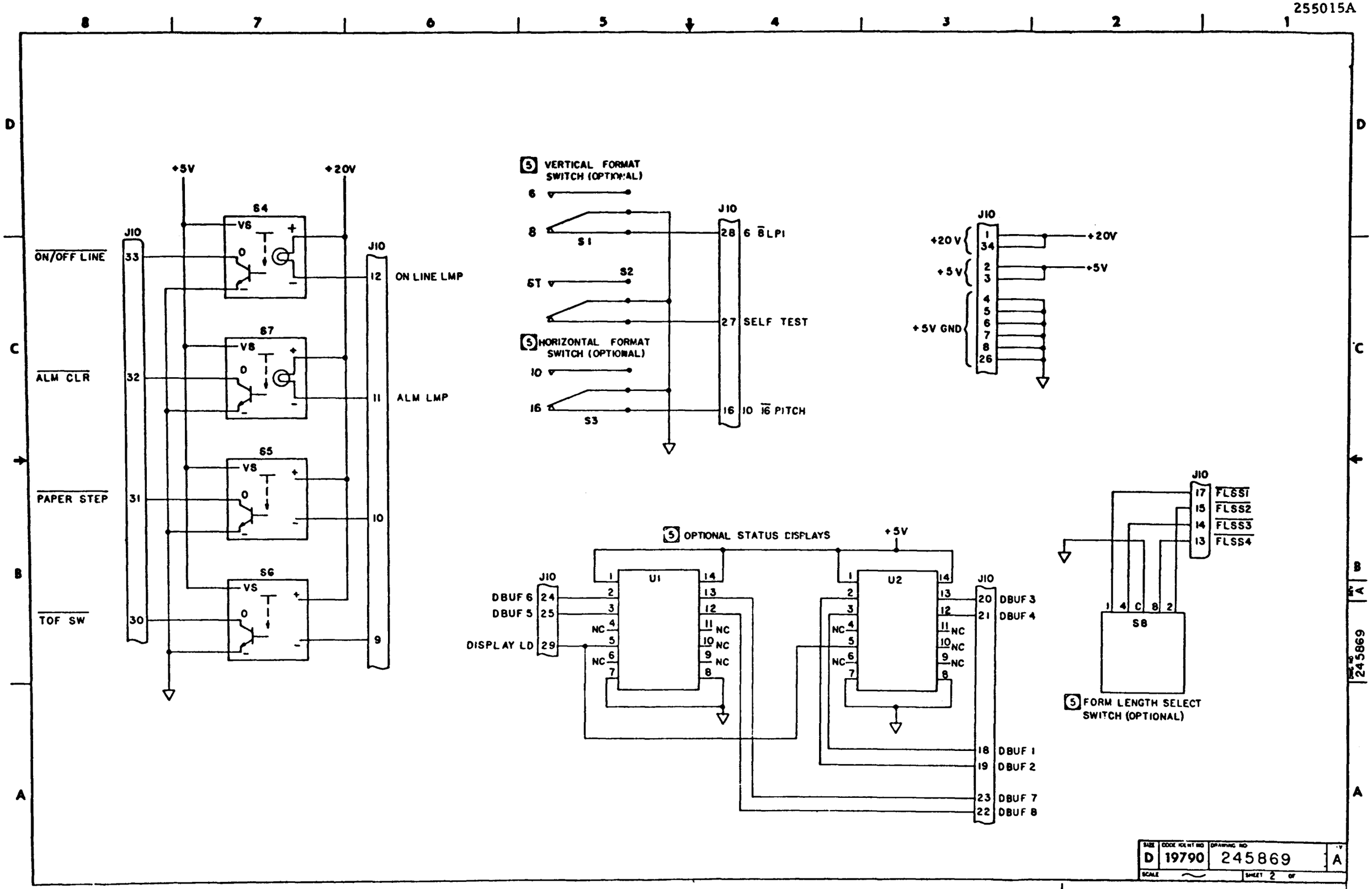

Figure 10 (SH 2 of 2)
Control Panel

4. REFERENCE SCHEMATIC DIAGRAM 249869, REV. A.
3. SIGNAL MNEMONICS WHICH CONTAIN A BAR (—) ARE ACTIVE IN THE LOW STATE.
2. SIGNAL NAMES CALLED OUT FOR INTERFACE CONNECTIONS ARE FOR DPC SHORT LINE AND LONG LINE I/F CARDS ONLY.
1. ALL CAPACITANCE VALUES ARE IN MICROFARADS, 20%, 50 VOLTS.

NOTES: UNLESS OTHERWISE SPECIFIED

Dataproducts			
TITLE SCHEMATIC-MOTHER BOARD			
SIZE D	CODE IDENT NO. 19790	249869	A
SCALE —			

Figure 11 (SH 1 of 3)
Circuit Card Assembly,
Mother Board (Wire List)

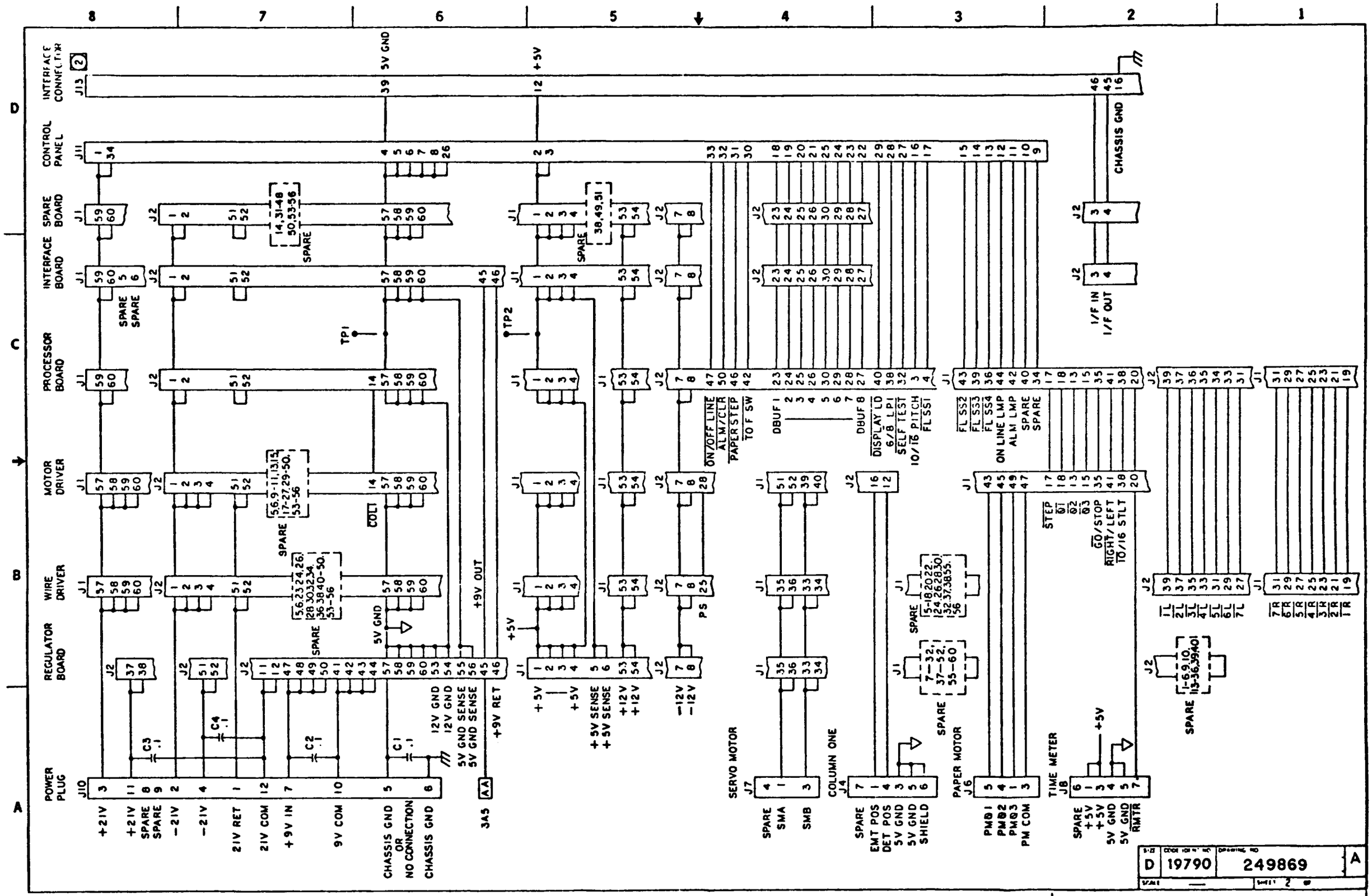

Figure 11 (SH 2 of 3)
Circuit Card Assembly,
Mother Board (Wire List)

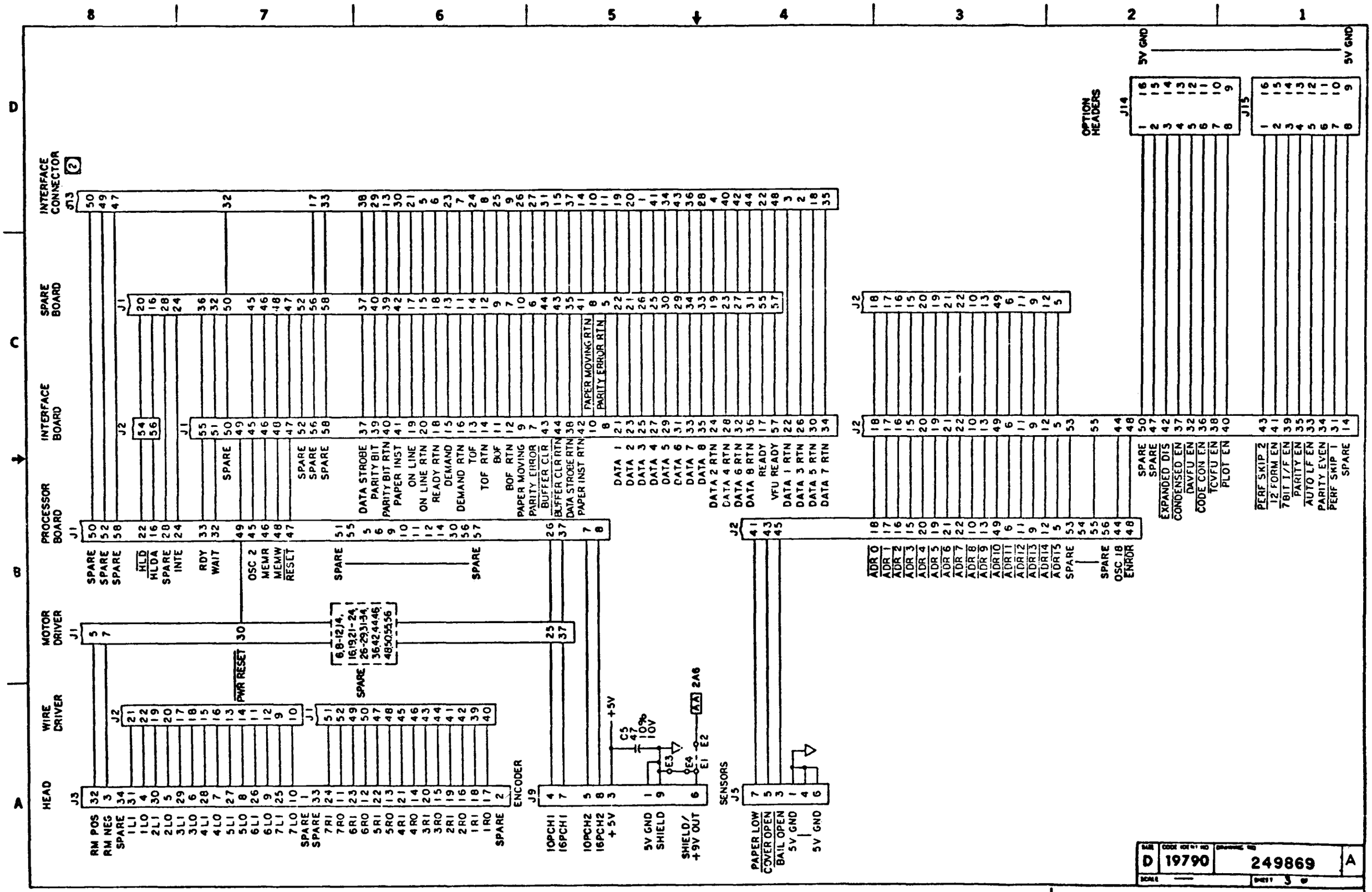

Figure 11 (SH 3 of 3)
Circuit Card Assembly,
Mother Board (Wire List)

☆ U.S. GOVERNMENT PRINTING OFFICE : 1985 O - 496-176 : QL 3